EL SERIES

HAZARDOUS LOCATION ACTUATORS AND MOTORS

High precision positioning with integrated feedback

Ability to handle heavy loads over thousands of hours

High efficiency and 100% duty cycle

Class 1, Division 1 Classification

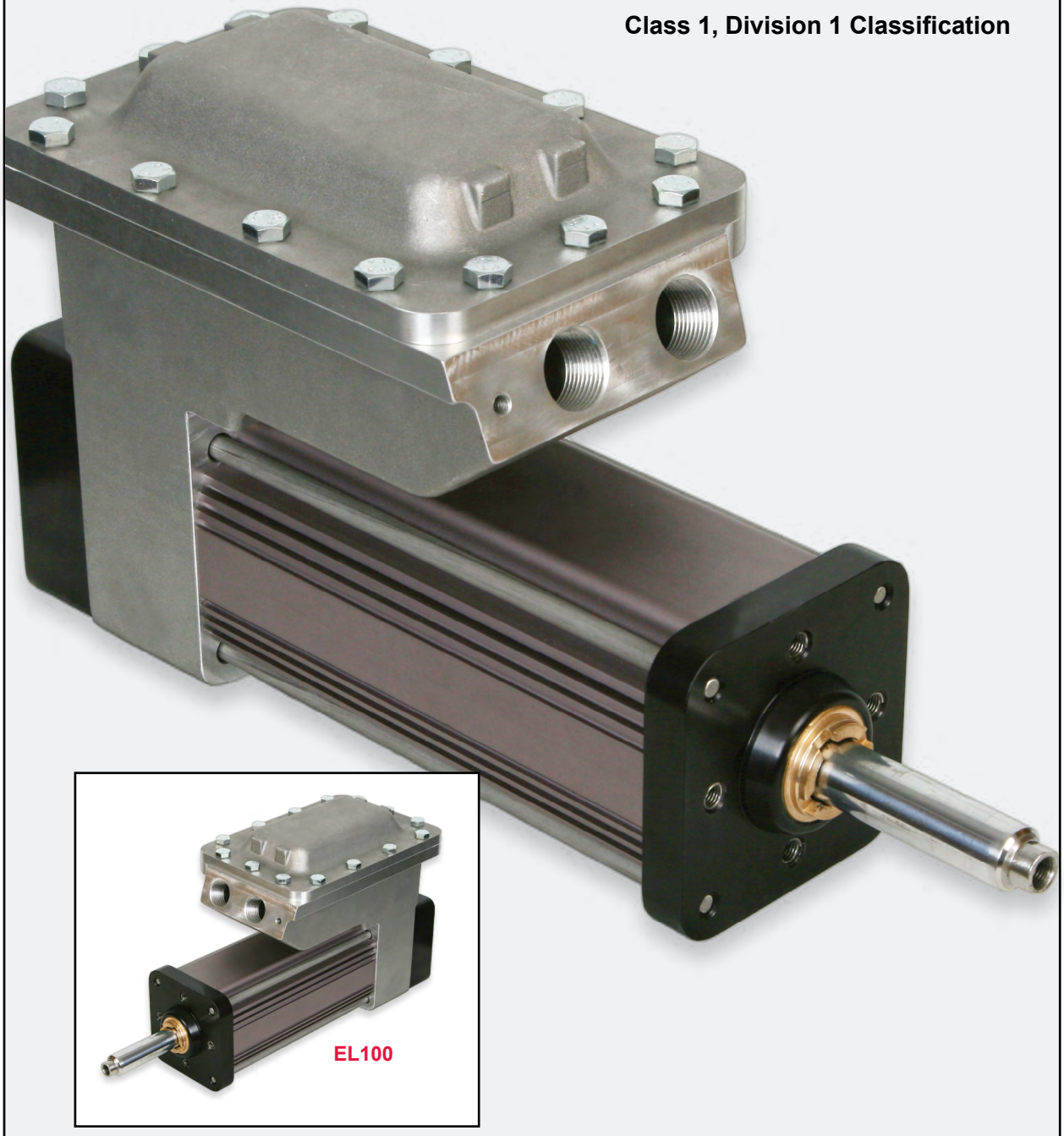

Return to table of contents

EL100

Explosion-Proof Linear Actuators

This electromechanical system provides process engineers with a clean, fast, simple, and cost effective replacement for hydraulic actuation and a longer life alternative to pneumatic actuation. The roller screw technology manufactured by Exlar offer 15 times the travel life of rival ball screws and can carry higher loads. The compact design allows users to effectively replace hydraulic or air cylinders with an electromechanical actuator, while meeting all required capabilities of the application. Servo electric actuation reduces emissions, lowers energy consumption (80% system energy efficiency), and increases position control and accuracy—all leading to reduced cost.

The EL100 explosion-proof linear actuator offers a Class 1, Division 1, Groups B, C, D, and T3 rating. Additionally, it meets ATEX essential requirements and are in conformance with the EU ATEX Directive 94/9/EC.

The EL Series linear actuators are compatible with nearly any manufacturer's resolver-based amplifier.

CE 0518

II 2 G
Ex d IIB+H2 T3 Gb
IECEx SIR 13.0139X

C SP® US
163694
Class I Division 1
Groups B, C, D, T3C

Features
T-LAM technology yielding 35% increase in continuous motor torque over traditional windings
Forces up to 2000 lbs
Speeds up to 25 ips
Resolver feedback
Strokes up to 6 inches
8 pole motors
Rod end options
Several mounting configurations
Potted NPT connectors
Windings available from 24 VDC to 460 VAC rms
Class 180H insulation, IP66S Standard

** "Class I" means that flammable gases or vapors may be present in the air in quantities sufficient to produce explosive or ignitable mixtures. "Division 1" means that hazardous concentrations in the air may exist continuously, intermittently, or periodically under normal operating conditions. "Group B" allows for atmospheres containing hydrogen, gases, or vapors of equivalent hazard, such as manufactured gas. "Group C" allows for atmospheres containing ethyl-ether vapors, ethylene or cyclo propane. "Group D" allows for atmospheres containing gasoline, hexane, naphtha, benzene, butane, alcohol, acetone, benzol, lacquer solvent vapors or natural gas. EL Series actuators are not rated for operation in atmospheres containing acetylene. Temperature classification defines the maximum surface temperature the product will reach at full load. T3 = 200° C, T3A =180° C, T4 = 135° C.*

Technical Characteristics	
Frame Sizes in (mm)	4 (100)
Screw Leads in (mm)	0.1 (2.54), 0.2 (5.08), 0.5 (12.7)
Standard Stroke Lengths in (mm)	5.9 (150)
Force Range	up to 4081 lbf-in (18 kN)
Maximum Speed	up to 37.5 in/sec (953 mm/s)

Operating Conditions and Usage		
Accuracy:		
Screw Lead Error	in/ft (µm / 300 mm)	0.001 (25)
Screw Travel Variation	in/ft (µm / 300 mm)	0.0012 (30)
Screw Lead Backlash	in (mm)	0.004 maximum
Ambient Conditions:		
Ambient Temperature	°C	-29 to 93
Storage Temperature	°C	-54 to 93
IP Rating		IP66S
Shock		10g
Vibration		5 grms, 5 to 2000 hz

Product Features

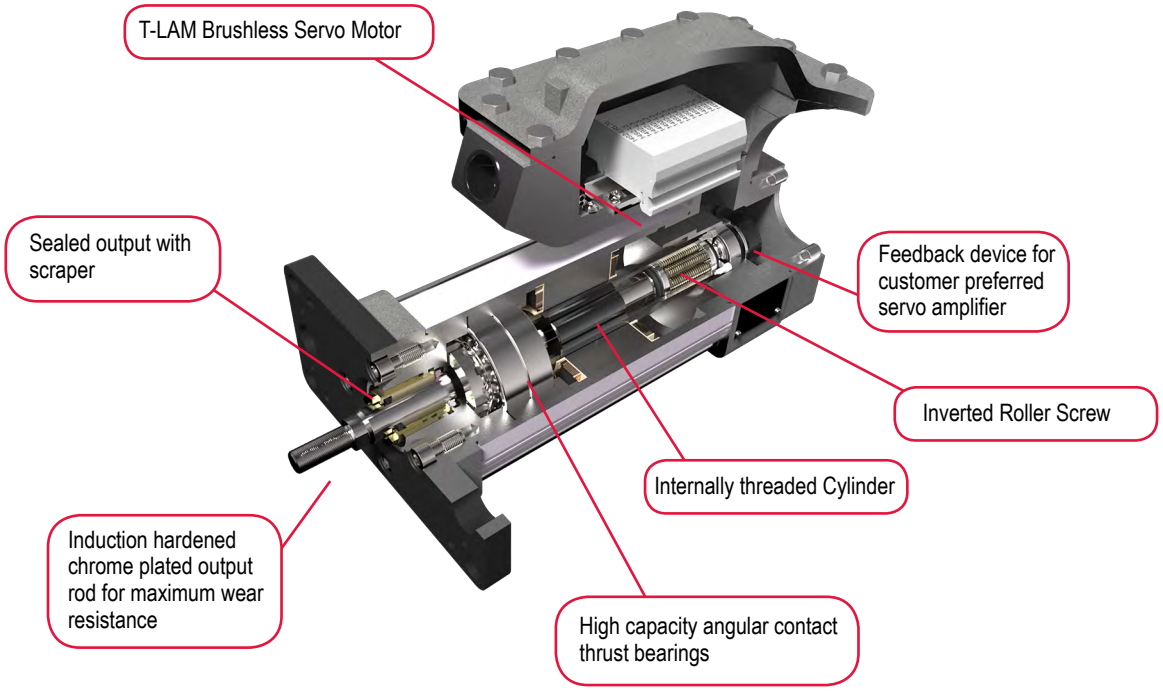

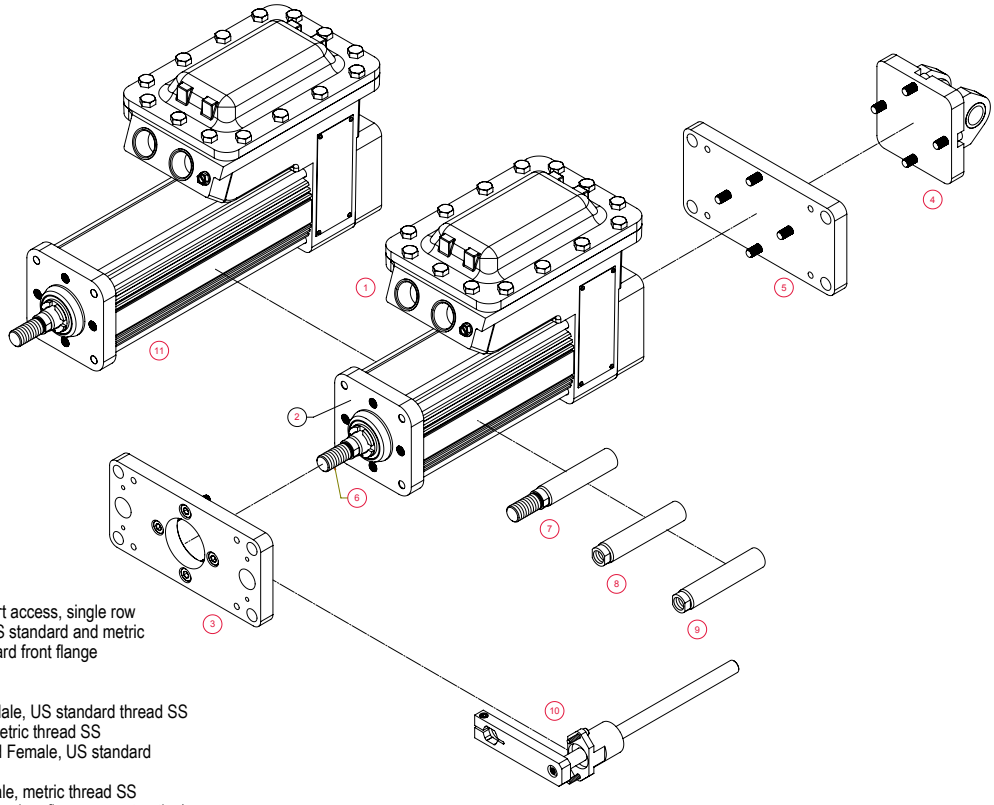

1 - Terminal strips with 3/4" NPT port access, single row
2 - Threaded front and rear face, US standard and metric
3 - Front and rear flange and standard front flange
4 - Standard rear clevis
5 - Front and rear flange
6 - Male, US standard thread and Male, US standard thread SS
7 - Male, metric thread and Male, metric thread SS
8 - Female, US standard thread and Female, US standard thread SS
9 - Female, metric thread and Female, metric thread SS
10 - External anti-rotate assembly (requires flange mount option)
11 - Rear brake

Industries and Applications

Process Control
- Turbine fuel flow
- Chemical process plants
- Fuel distribution systems
- Shipbound fuel management
- Valve control
- Damper control
- Fuel Skids
- Silos

Defense
- Weapons room

Material Handling
- Printing presses

Automotive
- Engine test stands
- Paint booths

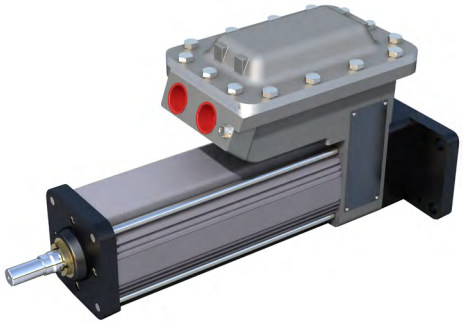

The EL100 actuator is another simple, clean, and cost effective replacement for hydraulics meeting Class 1, Division 1, Group B, C, D, and T3 as well as ATEX requirements.

Mechanical Specifications

Motor Stacks		2 Stacks		
Screw Lead Designator		01	02	05
Screw Lead	in	0.1	0.2	0.5
	mm	2.54	5.08	12.7
Continuous Force *(Motor Limited)*	lbf	2011	1005	402
	N	8943	4472	1789
Max Velocity	in/sec	6.66	13.33	33.33
	mm/sec	169.33	338.58	846.58
Friction Torque *(standard screw)*	in-lbf	1.7		
	N-m	0.19		
Friction Torque *(preloaded screw)*	in-lbf	3.5		
	N-m	0.39		
Back Drive Force	lbf	180	80	40
	N	800	360	180
Min Stroke	in	3		
	mm	75		
Max Stroke	in	18		
	mm	450		
C_a (Dynamic Load Rating)	lbf	5516	5800	4900
	N	24,536	25,798	21,795
Inertia	lb-in-s^2	0.002829		
	Kg-m^2	0.000003196		
Weight	lb	7.65		
	Kg	3.47		

*Please note that stroke mm are nominal dimensions. Specifications subject to change without notice.
**Inertia +/– 5%

See definitions on page 19.

Electrical Specifications

Motor Stator		2A8-10	2B8-25	2C8-40	218-40	238-40	258-40	268-40
Bus Voltage	Vrms	24 VDC	48 VDC	120 VDC	115 VAC	230 VAC	400 VAC	460 VAC
Speed @ Bus Voltage	rpm	1,000	2,500	4,000	4,000	4,000	4,000	4,000
RMS SINUSOIDAL COMMUTATION DATA								
Continuous Motor Torque (25°/80°C)	lbf-in	35.2/24.3	35.9/24.8	36.5/25.2	39.6/27.3	40.0/27.6	39.5/27.3	39.9/27.6
	N-m	3.98/2.75	4.06/2.80	4.12/2.85	4.47/3.09	4.52/3.12	4.46/3.08	4.51/3.11
Torque Constant	lbf-in	1.7	1.7	2.6	3.2	6.6	11.6	13.2
	N-m/A	0.19	0.19	0.30	0.37	0.75	1.31	1.50
Continuous Current Rating (25°/80°C)	A	23.1/15.9	23.6/16.3	15.6/10.7	13.6/9.4	6.8/4.7	3.8/2.6	3.4/2.3
Peak Current Rating (25°/80°C)	A	46.2/31.9	47.1/32.5	31.1/21.5	27.3/18.8	13.5/9.3	7.6/5.3	6.7/4.7
O-PEAK SMUSOIDAL COMMUTATION DATA								
Continuous Motor Torque (25°/80°C)	lbf-in	35.2/24.3	35.9/24.8	36.5/25.2	39.6/27.3	40.0/27.6	39.5/27.3	39.9/27.6
	N-m	3.98/2.75	4.06/2.80	4.12/2.85	4.47/3.09	4.52/3.12	(4.46/3.08)	(4.51/3.11)
Torque Constant	lbf-in/A	1.2	1.2	1.9	2.3	4.7	8.2	9.4
	N-m/A	0.14	0.14	0.21	0.26	0.53	0.92	1.06
Continuous Current Rating (25°/80°C)	A	32.7/22.6	33.3/23.0	22.0/15.2	19.3/13.3	9.5/6.6	5.4/3.7	4.8/3.3
Peak Current Rating (25°/80°C)	A	65.4/45.1	66.7/46.0	44.0/30.4	38.6/26.6	19.1/13.2	10.8/7.5	9.5/6.6
MOTOR STATOR DATA								
Voltage Constant @ 25˚C (Ke)	Vrms/Krpm	11.6	11.6	17.9	22.1	45.2	78.9	90.4
	Vpk/Krpm	16.5	16.5	25.3	31.3	64.0	111.6	127.9
Pole Configuration		8	8	8	8	8	8	8
Resistance (L-L)	Ohms	0.10	0.1	0.2	0.30	1.2	3.8	4.86
Inductance (L-L)	mH	0.75	0.8	1.9	2.93	12.2	37.2	48.9
Brake Inertia	lbf-in-sec^2	0.00047						
	kg-cm^2	0.53						
Brake Current @24 VDC +/- 10%	A	0.5						
Brake Holding Torque - Dry	lbf-in	70						
	Nm/A	8						
Brake Engage/Disengage Time	ms	25/50						
Mechanical Time Constant (tm)	ms	1.4	1.3	1.3	1.1	1.1	1.1	1.1
Electrical Time Constant (te)	ms	7.2	7.9	8.2	9.9	10.1	9.9	10.1
Frictional Torque	lbf-in	2.22	2.22	2.22	2.22	2.22	2.22	2.22
	N-m	0.25	0.25	0.25	0.25	0.25	0.25	0.25
Insulation Class		180 (H)						
Ambient Temperature Rating		-29° C to 93° C						
CSA/ATEX Temperature Class		T3, 200˚ C Maximum Allowable Surface Temperature						

For amplifiers using peak sinusoidal ratings, multiply RMS sinusoidal Kt by 0.707, and peak current by 1.414.
Test data derived using NEMA recommended aluminum heatsink 12" x 12" x 1/2" at 25° / 80°C ambient.

Specifications subject to change without notice.

Performance Curves

The below speed vs. force curves represent approximate continuous thrust ratings at indicated linear speed. Different types of servo amplifiers offer varying motor torque and, thus, varying actuator thrust. These values are at constant velocity and do not account for motor torque required for acceleration.

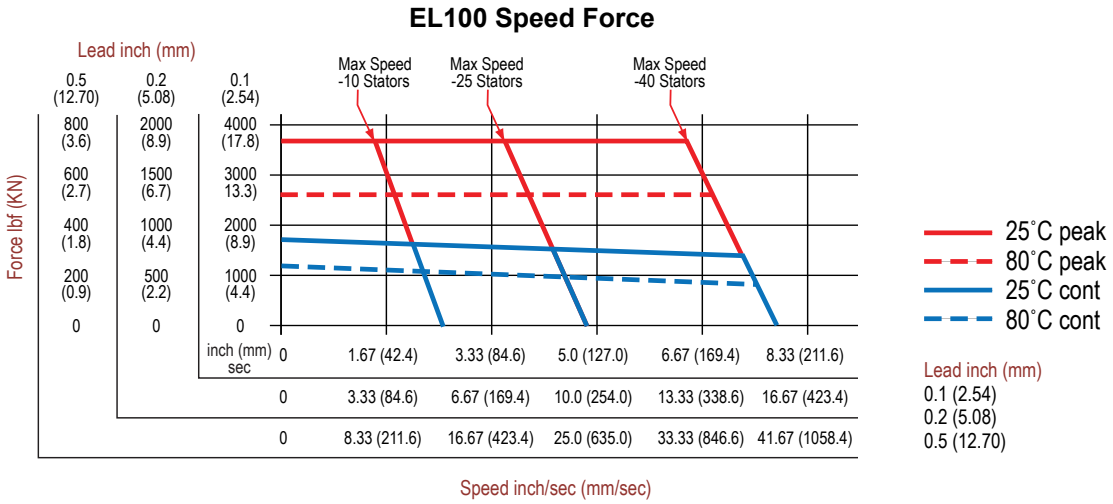

DEFINITIONS:

Continuous Force: The linear force produced by the actuator at continuous motor torque.

Max Velocity: The linear velocity that the actuator will achieve at rated motor rpm.

Friction Torque (standard screw): Amount of torque required to move the actuator when not coupled to a load.

Friction Torque (preloaded screw): Amount of torque required to move the actuator when not coupled to a load.

Back Drive Force: Amount of axial force applied to the rod end of the actuator that will produce motion with no power applied to the actuator.

Min Stroke: Shortest available stroke length.

Max Stroke: Longest available stroke length.

C_a (Dynamic Load Rating): A design constant used when calculating the estimated travel life of the roller screw.

Inertia (zero stroke): Base inertia of an actuator with zero available stroke length.

Inertia Adder (per inch of stroke): Inertia per inch of stroke that must be added to the base (zero stroke) inertia to determine the total actuator inertia.

Weight (zero stroke): Base weight of an actuator with zero available stroke length.

Weight Adder (per inch of stroke): Weight adder inch unit of stroke that must be added to the base (zero stroke) weight to determine the total actuator weight.

Dimensions

Base Actuator

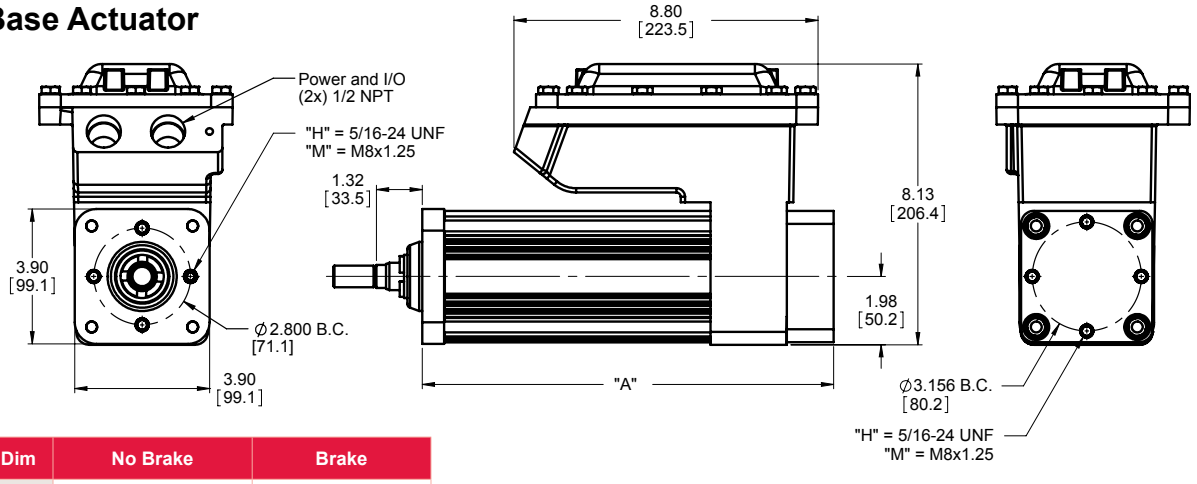

Dim	No Brake	Brake
A	11.9 (302.3)	14.2 (360.8)

Front Flange or Clevis Mount

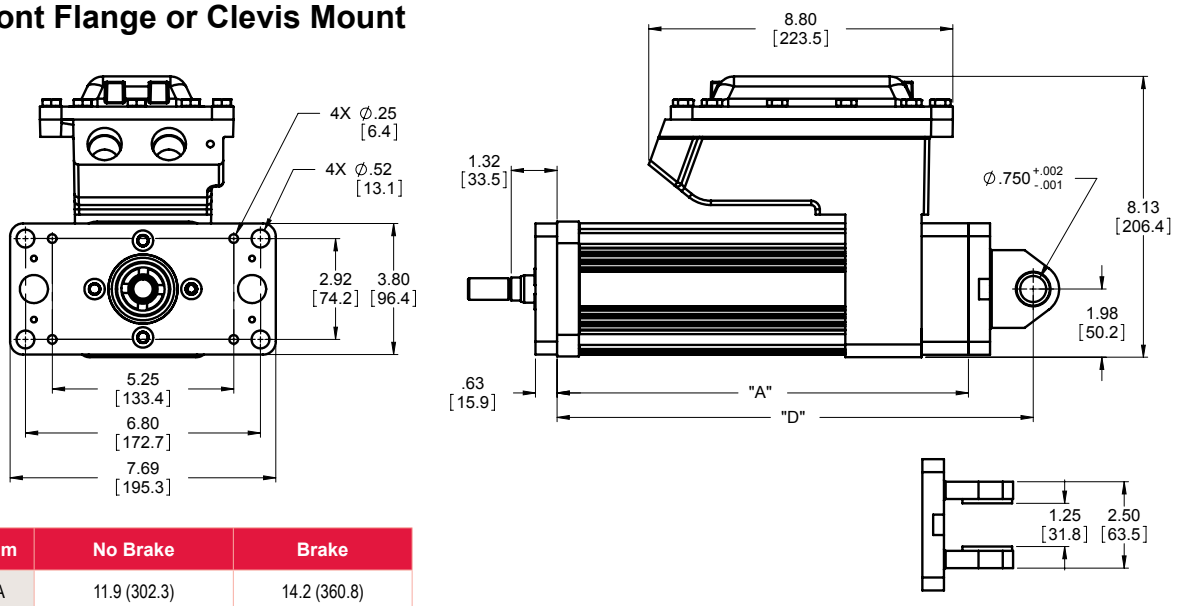

Dim	No Brake	Brake
A	11.9 (302.3)	14.2 (360.8)
D	13.77 (349.9)	16.7 (408.2)

Rod End Options

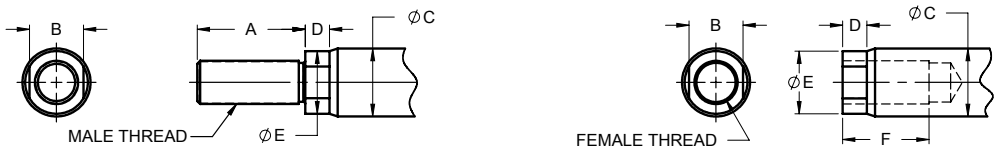

	A	B	ØC	D	ØE	F	Male "M" Inch	Male "A" Metric	Female "F" Inch	Female "B" Metric
EL100 in (mm)	1.250 (31.8)	0.625 (17.0)	0.787 (20.0)	0.281 (7.1)	0.725 (18.4)	1.000 (25.4)	1/2 - 20 UNF – 2A	M16 x 1.5 6g	1/2 - 20 UNF – 2B	M16 x 1.5 6h

Pre-sale drawings and models are representative and are subject to change. Certified drawings and models are available for a fee. Consult your local Exlar representative for details.

Terminal Box Wiring

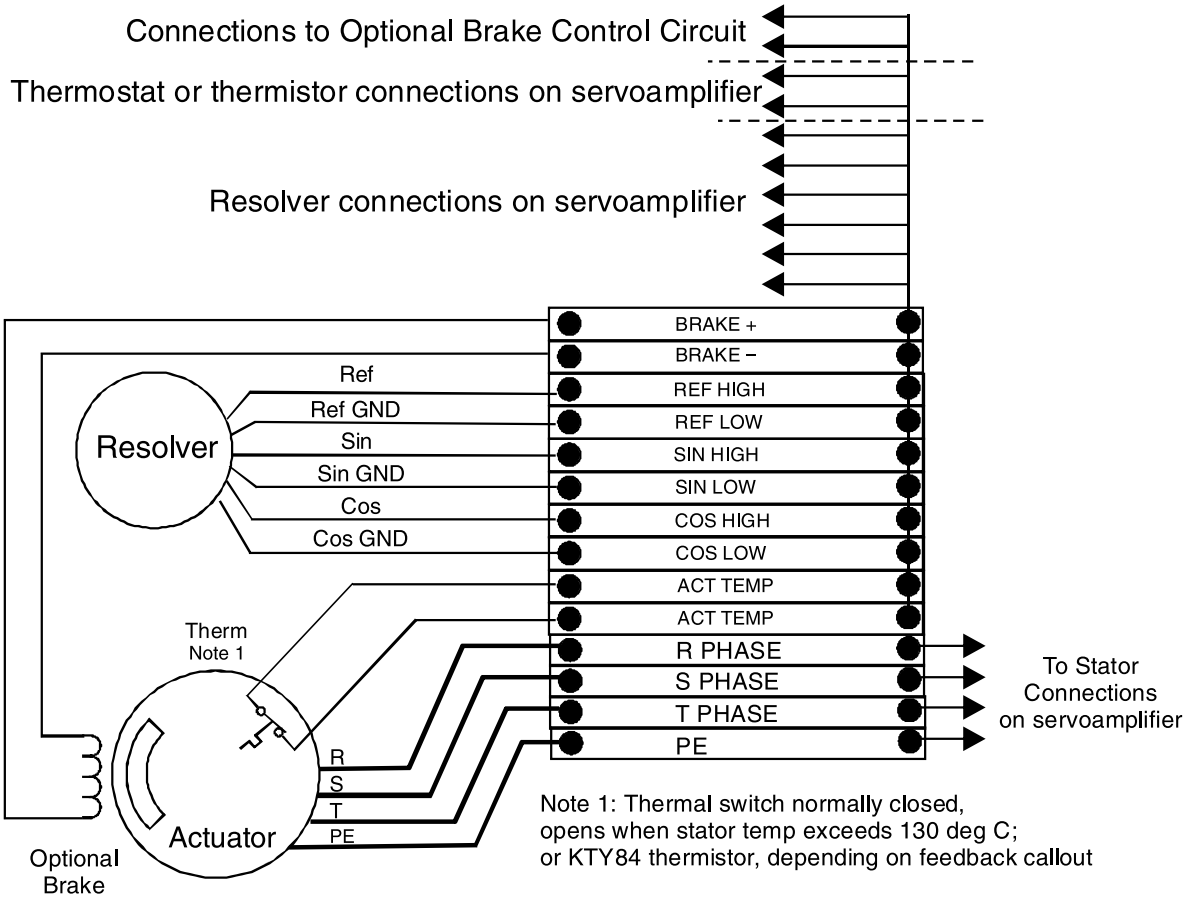

Pre-sale drawings and models are representative and are subject to change. Certified drawings and models are available for a fee. Consult your local Exlar representative for details.

EL100 Series Ordering Guide

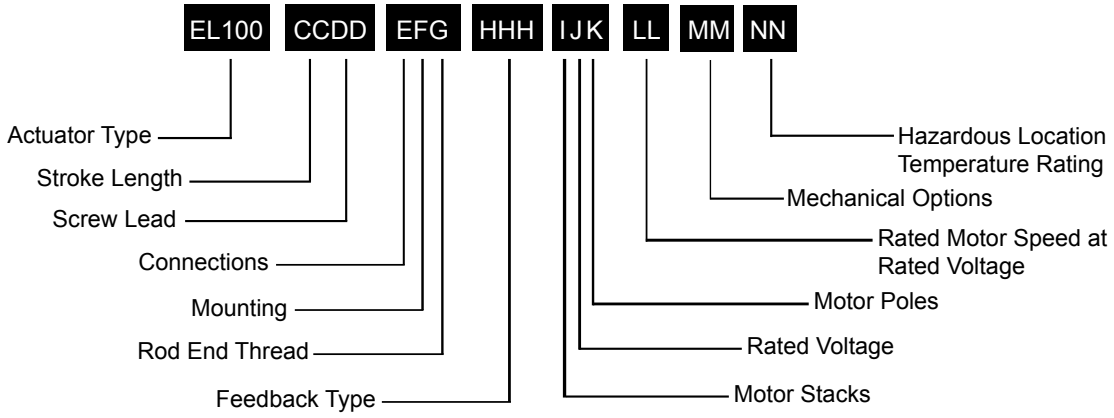

EL100 = Model Series

CC = Stroke Length
06 = 5.9 inch (150 mm)

DD = Roller Screw Lead (Linear Travel per Screw Revolution)
01 = 0.1 in/rev (2.54 mm/rev)
02 = 0.2 in/rev (5.08 mm/rev)
05 = 0.5 in/rev (12.7 mm/rev)

E = Connections
S = Terminal strips with 3/4" NPT port access, single row

F = Mounting
H = Threaded front and rear face, US standard thread
N = Threaded front and rear face, metric thread
F = Standard front flange
C = Standard rear clevis
R = Rear flange

G = Rod End
M = Male, US standard thread
A = Male, metric thread
F = Female, US standard thread
B = Female, metric thread

HHH = Controller Feedback Option
XX1 = Custom Feedback. Resolver only. Consult Exlar
AB6 = Allen-Bradley/Rockwell - standard resolver
AM3 = Advanced Motion Control - standard resolver
AP1 = API Controls - standard resolver
BD2 = Baldor - standard resolver
BM2 = Baumueller - standard resolver
BR1 = B&R Automation
CT5 = Control Techniques - standard resolver
CO2 = Copely Controls - standard resolver
DT2 = Delta Tau Data Systems - standard resolver
EL1 = Elmo Motion Control - standard resolver
EX4 = Exlar - standard resolver
IF1 = Infranor - standard resolver
IN6 = Indramat/Bosch-Rexroth - standard resolver
JT1 = Jetter Technologies - standard resolver
KM5 = Kollmorgen/Danaher - standard resolver
LZ5 = Lenze/AC Tech - standard resolver
MD1 = Modicon - standard resolver
MG1 = Moog - standard resolver
MN4 = Momentum – Standard Resolver
MX1 = Metronix - standard resolver
OR1 = Ormec - standard resolver
PC7 = Parker - standard resolver - European only
PC0 = Parker - standard resolver - US only
PS3 = Pacific Scientific - standard resolver
SM2 = Siemens - standard resolver
SW1 = SEW/Eurodrive - standard resolver
WD1 = Whedco/Fanuc - standard resolver

I = Motor Stacks
2 = 2 stack motor

J = Rated Voltage
A = 24 VDC
B = 48 VDC
C = 120 VDC
1 = 115 Volt RMS
3 = 230 Volt RMS
5 = 400 Volt RMS
6 = 460 Volt RMS

K = Motor Poles
8 = 8 Pole Motor

LL = Rated Motor Speed at Rated Voltage
40 = 4000 RPM

MM = Mechanical Options [1]
AR = External anti-rotate assembly (requires flange mount option)
RB = Rear brake

NN = Haz Loc Temp Rating
T3 = 200˚ C max allowable surface temperature

For options or specials not listed above or for extended temperature operation, please contact Exlar

NOTES:
1. For extended temperature operation consult factory for model number.