CATALOG

> Inductive and Capacitive Sensors

DATALOGIC
THE VISION IS YOURS

DATALOGIC: SOLUTIONS FOR INDUSTRIAL AUTOMATION

Datalogic Industrial Automation is an industry-leader in products and solutions for material handling, traceability, inspection and detection applications.
With the acquisitions of Accu-Sort and PPT Vision in 2012, the company offers a comprehensive portfolio of products, technologies and solutions delivered by a team of skilled professionals dedicated in providing superior service to customers.
Datalogic is the partner of choice for organizations in the Industrial Automation market.

Manufacturing

- AUTOMOTIVE
- ELECTRONICS
- FOOD & BEVERAGE
- GENERAL MANUFACTURING
- HEALTHCARE - PHARMACEUTICAL

Transportation & Logistics

- AIRPORTS
- COURIER, EXPRESS PARCEL (CEP)
- POSTAL
- RETAIL DISTRIBUTION

Product portfolio

Datalogic Industrial Automation has the most comprehensive offering of products and solutions for traceability, inspection and detection applications in factory automation and logistics processes: industrial LASER scanners, cameras and vision systems, sensors, machine safety devices and LASER markers.

Identification

Even the most demanding and efficient automation of identification processes can leverage Datalogic Industrial Automation's leadership in the market. We manufacture the world's most comprehensive family of fixed-mount line and omnidirectional scanners.
We also offer the latest CCD vision technology with the world's largest installed base of CCD systems for bar code reading and dimensioning.
All of our AUTO-ID products and solutions leverage the broadest decoding library that has been developed through the years. Datalogic's comprehensive AUTO-ID portfolio is used in a wide range of applications and machines which are behind many of the everyday processes that keeps the global economy running.

Sensors & Safety

Datalogic Industrial Automation offers a best-in-class, comprehensive product portfolio of photoelectric and proximity sensors, rotary encoders, temperature controllers and measurement devices, as well as type 2 and type 4 safety light curtains.
These product lines provide solutions for applications involving color, contrast and luminescence, label detection, dimensional and distance measurement, in addition to machine safeguarding and access control in dangerous areas.

Machine Vision

The Datalogic Industrial Automation machine vision product line encompasses both hardware and software while covering a wide range of performance and price point requirements. The vision portfolio of products and solutions ranges from standalone compact smart cameras to the highest performance embedded processors.

Laser Marking

Laser Marking sources and systems provide value driven marking solutions for automotive, metal tools, medical, electronics and packaging. Datalogic Industrial Automation offers an extensive range of state-of-the-art technology, excellent performance and high reliability marking equipment.

Inductive Sensors
Inductive proximity sensors generate a magnetic field from their detection faces. Whenever a detectable object moves into the sensor's field of detection, Eddy currents build up in the target and dampen the sensor's magnetic field. This effect triggers the sensor's output. Since a current in the target is needed for detection, inductive proximity sensors are uniquely suited for detection of all types of metals.

ADVANTAGES
-Not affected by humidity and dust
-No moving parts, no mechanical wear
-Independent of the color of the object to detect
-No dead zone

DISADVANTAGES
-only detect metallic objects
-low operating distance
-sensitive to electromagnetic interference
(such as electric welding, induction ovens)

Shielded models - FLUSH mounting
Shielded models can be installed with their sensing faces flush to the metal. The distance from opposing metal surfaces must be ≥ 3sn and the distance between two proximity switches (side-byside) ≥ 2D.

Unshielded models - NON-FLUSH mounting
Unshielded models can be identified by their 'caps", since they have no metal housing surrounding the area of the sensing face. The sensing face must extend ≥ 2sn from the metallic installation medium. The distance from opposing metal surfaces must be ≥ 3sn and the distance between two adjacent proximity switches ≥ 3D. The metal body leaves uncovered part of the sensing area resulting in an increased sensing distance.

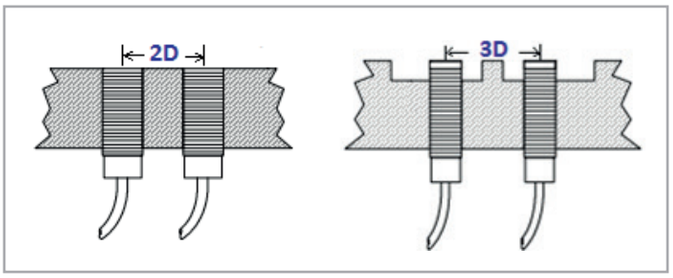

Main tubular models are available in both nickel plated brass and stainless steel housing, with the active sensing face in LCP plastic.

METAL FACE version:
Are available stainless steel versions (M12,M18).
Are used in especially harsh environments and applications which are too extreme for standard sensors. They resist to abrasive media, aggressive cleaners and solvents with their rugged sensing face. IP67 protection.

WELD FIELD IMMUNE version:
These special field immune models are ideal for welding environments and other applications where large magnetic fields are present. They are rated for reliable operation near the current line carrying 20,000 amps.

NAMUR version:
Are available 2 wires versions (M5, M6,5, M8, M12, M18, M30). They can be used in conjunction with suitable switching amplifiers.
The switch amplifier must be installed outside the explosive area.
Almost all versions have IP67 mechanical protection.

Nominal Switching distance (Sn) According to EN 60947-5-2
When an inductive proximity sensor is rated for sensing distance, it refers to the sensor's ability to detect the 'standard detectable object" at its specified sensing distance. The 'standard detectable object" is a 1mm thick square piece of ferrous iron that is in height and width the size of the proximity sensor's detection face's diameter.

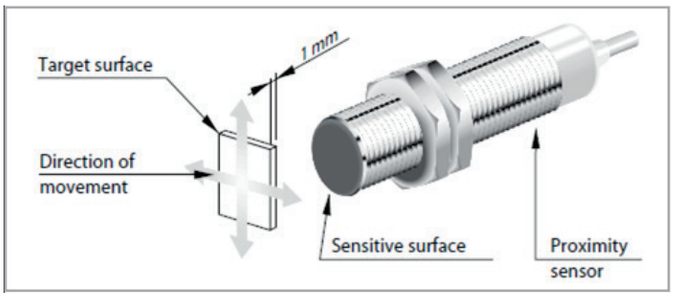

When the object to be detected is a different metal material, multiply the value of the rated operating distance for a reduction factor. The table beside shows the average reduction factors of materials according to the standards.

REDUCTION FACTOR	
Fe37	1 x Sn*
Stainless Steel AISI316L (X2CrNiMo17-12-2, UNI EN 10088-3)	0,9 x Sn
Brass-Bronze (CuZn33, UNI EN 12163:1999)	0,5 x Sn
Aluminum (25°C) (EN AW-1060, UNI EN 573-3:2006)	0,4 x Sn
Copper (Cu-DHP, UNI EN 1652:1999)	0,3 x Sn

Hysteresis (H):
distance between the point of switching on and the point of switching off of the trigger object. The value is a percentage of the nominal switching distance Sn.

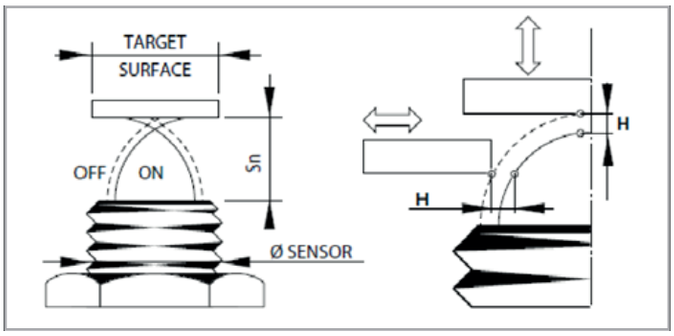

AC/DC version:
Are available 2/3-wires versions (M12, M18, M30) , that operate in alternating current with voltage drop of 5 V for currents of the order of 100mA.
To be able to provide a proper potential drop at the load, it is recommended to power the sensors with at least a supply voltage equal to the Voltage drop indicated (5V).

"M12/18/30 models are Diversey and ECOLAB tested"

M12/18/30 FLUSH Vdc models are ATEX certified
I I 3G EX nA II T6
I I 3D EX tD A22 IP67 T85°C

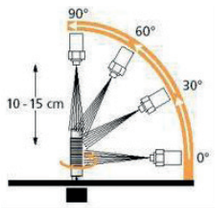

IP69K
The Stainless Steel series is rated IP69K.

OPERATING DISTANCE

MODEL	M4	M5	M6,5	M8	M12	M18	M30	SQUARE
DIAMETER (mm)	4	5	6,5	8	12	18	30	8X8; 40X40
OPERATING DISTANCE (mm)	0,8	0,8...1,5	1...3	1,5...3	2...8	5...14	10...20	1,5...30

HOUSING

The following tables are showing the approximate housing length (mm) for the tubular inductive sensors and the absolute maximum installation limit of the mounting torque.

MODELS	STANDARD MODEL LENGTH (mm)		SHORT MODEL LENGTH (mm)	
	connector	cable	connector	cable
M4	---	25	---	---
M5	40	20...25	---	---
M6,5	53...63	46...55	50...54	40...44
M8	52...73	44...55	48...57	40...44
M12	68...72	58...64	48...54	42...48
M18	73...82	70...78	56...65	47...56
M30	74...85	70...82	56...68	49...56

INSTALLATION TIGHTENING TORQUE				
MOUNTING	Flush, No Flush mountable	**Diameter**	**A (11 mm)**	**B**
HOUSING MATERIAL	Stainless Steel, Nickel Brass	4 mm	1,5 [Nm]	1,5 [Nm]
INSTALLATION	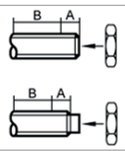	5 mm	1,5 [Nm]	1,5 [Nm]
		8 mm	2 [Nm]	4 [Nm]
		12 mm	6 [Nm]	10 [Nm]
		18 mm	20 [Nm]	30 [Nm]
		30 mm	40 [Nm]	60 [Nm]

WIRES

TYPE	DESCRIPTION
2-3 WIRES	Work with sinking or sourcing devices
	Vdc, Vac and NAMUR versions
	Higher leakage current
3 WIRES	Must select PNP or NPN, NC or NO version
	10-30 Vdc version
	Low leakage current
4 WIRES	Programmable output
	PNP/NPN and NC/NO in one device

The number of inductive proximity sensors that can be connected in series or parallel is limited.

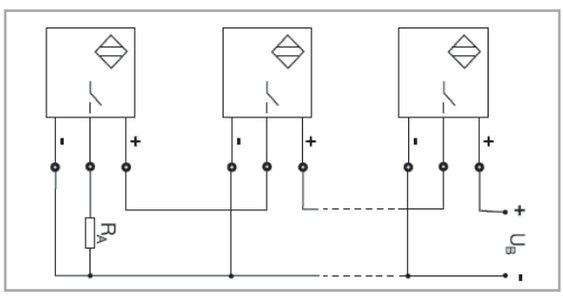

Parallel connection: the leakage current of each single sensor, when added to the other, may accumulate and drive the load even in the absence of operated switches.

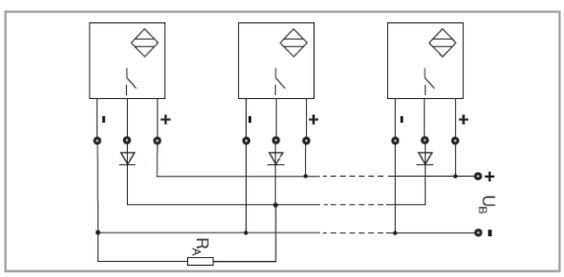

This problem is more relevant in versions AC 2-wire, because of the high voltages and currents supplied to the sensor. For this type of connection you should use a 3-wire sensors working in DC.

ELECTRICAL PARAMETERS

- **NOMINAL VOLTAGE**
  Is the permissible voltage range in which certain safe operation of the switch is guaranteed.
- **RESIDUAL RIPPLE**
  Is the maximum admissible ripple of the DC supply voltage shown as percentage to its medium value.
- **MAX. OUTPUT CURRENT**
  It shows maximum output current a sensor can cope with when working steadly.
- **MIN. OUTPUT CURRENT**
  Is the smallest load current required for function of the switch when ON.
- **RESIDUAL CURRENT**
  Is the current flowing through the load when a proximity switch is not conducting (open).
- **VOLTAGE DROP**
  Is the voltage measured across the load of a closed (conducting) sensor at load current.
- **START UP DELAY**
  Is the time from when the supply voltage is applied, and the proximity switch assumes the ready state. This time may not be longer than 300 ms. During this time there must be no fault signal longer than 2 ms.
- **SWITCHING FREQUENCY**
  Refers to the maximum number of switching operations per second.
- **SHORT CIRCUIT PROTECTION**
  Is 100 A, i. e., per EN 60947-5-2 the power supply during testing in short circuit mode must be able to provide at least 100 A for a short duration. This current is prescribed in the standard in order to test.
- **PROTECTION AGAINST INVERSION OF POLARITY**
  Available in DC supplied type, it prevents the sensor from being damage when supply cables are incorrectly connected.
- **INDUCTIVE LOAD PROTECTION**
  It protects sensor output in presence of high inductive loads. This protection is performed by a diode or zenner diode.

INDEX

BASIC 08

- Nickel-plated Brass housing
- LCP active face
- Standard length
- Short length
- Normal and Double range Operating distance
- Operating distance: 1,5 ... 20 mm
- M6,5, M8, M12, M18, M30
- cable, M8 or M12 connector
- 2, 3 or 4 wires
- PNP, NPN, PNP/NPN, NO, NC, NO/NC
- IP67 protection

STAINLESS STEEL 32

- Stainless Steel housing
- M4, M5 POM active face - M6,5, M8, M12, M18, M30 LCP active face
- Standard length
- Short length
- Normal and Double range Operating distance
- Operating distance 0.8 ... 20 mm
- M4, M5, M6,5, M8, M12, M18, M30
- cable, M8 or M12 connector
- 3 wires
- PNP, NPN, NO, NC
- IP69K protection

INDUCTIVE AC 54

- Nickel-plated Brass housing
- PA 16 active face
- Standard length
- Operating distance 2 ... 10 mm
- M12, M18, M30
- cable or M12 connector
- 20+250 Vac (50,60 Hz)
- 2 or 3 wires
- NO
- IP67 protection

NAMUR 60

- Nickel-plated Brass housing
- LCP active face
- Short length
- Operating distance 0.8 ... 15 mm
- M12, M18
- cable, M8 or M12 connector
- 2 wires
- PNP, NO
- IP67 protection

M4

- flush
- Stainless Steel
- op.dist.: 0,8 mm
- diameter: 4 mm
- 3 wires
- PNP or NPN, N.O.
- cable

M5

- flush
- Stainless Steel
- op.dist.: 0,8 mm
- double range vers.: 1,5 mm
- diameter: 5 mm
- 3 wires
- NAMUR vers.
- PNP or NPN, N.O., N.C.
- M8 connector or cable

M6,5

- flush, non-flush
- Stainless Steel, Nickel plated-Brass
- op.dist.: 1,5...2 mm
- double range vers.: 2...3 mm
- diameter: 6,5 mm
- standard or short housing
- 3 wires
- NAMUR (2wires) vers.
- PNP or NPN, N.O., N.C.
- M8 connector or cable

M8

- flush, non-flush
- Stainless Steel, Nickel plated-Brass
- op.dist.: 1,5...2 mm
- double range vers.: 2...3 mm
- diameter: 8 mm
- standard or short housing
- 3 wires
- NAMUR (2wires) vers.
- PNP or NPN, N.O., N.C.
- M8, M12 connector or cable

M12

- flush, non-flush
- Stainless Steel, Nickel plated-Brass
- op.dist.: 2...4 mm
- double range vers.: 4...8 mm
- diameter: 12 mm
- standard or short housing
- 2, 3, 4 (programmable NPN/PNP output) wires
- Vac/Vdc vers.
- Metal Face vers.
- NAMUR vers.
- Field Immune vers.
- PNP or NPN, N.O., N.C.
- M12 connector or cable

METAL FACE 46

- Stainless Steel housing
- Stainless Steel AISI 303 active face
- Stainless Steel active face
- Standard length
- 2 ... 8 mm
- M12, M18
- M12 connector
- 3 wires
- PNP, NO
- IP67 protection

WELD FIELD IMMUNE 50

- Stainless Steel housing
- PTFE active face
- Standard length
- Operating distance 2 ... 8 mm
- M12, M18
- M12 connector
- 3 wires
- PNP, NO
- IP67 protection

SQUARE 70

- PBT (resin) or Nickel-plated Brass housing
- Operating distance 1.5 ... 15 mm
- 40x40 mm or 8x8 mm dimension
- cable, M8 connector or Terminal Block
- 2 or 3 wires
- PNP, PNP/NPN, NO, NC, NO/NC
- IP67

CAPACITIVE 76

- Nickel plated brass
- M18, M30
- Basic line NO-NC
- Capacitive A.C. (plastic housing)
- Multivoltage (SPDT relay)
- Operating distance: 5...25 mm
- Cable or M8 connector
- 2,4,6 wires
- PNP or NPN, N.O. and N.C. outputs, SPDT relay
- Delay ON or delay OFF model
- IP67 protection

CABLES, CONNECTORS & ACCESSORIES 84

M18

- flush, non-flush
- Stainless Steel, Nickel plated-Brass
- op.dist.: 5...8 mm
- double range vers.: 8...14 mm
- diameter: 18 mm
- standard or short housing
- 2, 3 4 (programmable NPN/PNP output) wires
- Vac/Vdc vers.
- Metal Face vers.
- Field Immune vers.
- NAMUR vers.
- PNP or NPN, N.O., N.C.
- M12 connector or cable
- Capacitive D.C., N.O.-N.C. outputs
- Capacitive A.C., 2 wires, N.O.

M30

- flush, non-flush
- Stainless Steel, Nickel plated-Brass
- op.dist.: 10...15 mm
- double range vers.: 15...20 mm
- diameter: 30 mm
- standard or short housing
- 2, 3, 4 (programmable NPN/PNP output) wires
- Vac/Vdc vers.
- NAMUR vers.
- PNP or NPN, N.O., N.C.
- M12 connector or cable
- Capacitive D.C., N.O.-N.C. outputs
- Capacitive A.C., 2 wires, N.O.
- Capacitive Multivoltage with timer relay output

SQUARE 40X40

- flush, non-flush
- standard or short housing
- Plastic (PBT resin)
- op.dist.: 15...30 mm; 7-20 mm (Analog vers.)
- diameter: 40 mm
- 2, 3 wires
- Vac/Vdc vers.
- Analog output 4-20mA vers.
- PNP or NPN, N.O., N.C.
- Terminal block

SQUARE 8X8

- flush
- Nickel-Plated Brass
- op.dist.: 1,5 mm
- diameter: 8 mm
- 3 wires, PNP, N.O.
- M8 connector or cable

BASIC

Nickel-plated Brass housing
LCP active face
Standard length
Short length
Normal and double range operating distance
Operating distance: 1,5 ... 20 mm
M6,5, M8, M12, M18, M30
cable, M8 or M12 connector
2, 3 or 4 wires
PNP, NPN, PNP/NPN, NO, NC, NO/NC
IP67 protection

REDUCTION FACTOR

	ALUMINUM (25°C)	STAINLESS STEEL AISI316L	COPPER	BRASS
FLUSH	0,3...0,5	0,7...0,9	0,2...0,5	0,4...0,6
NON-FLUSH	0,4...0,6	0,7...1,05	0,4...0,5	0,5...0,7

˝M12/18/30 models are Diversey and ECOLAB tested˝

BASIC

BASIC M6.5

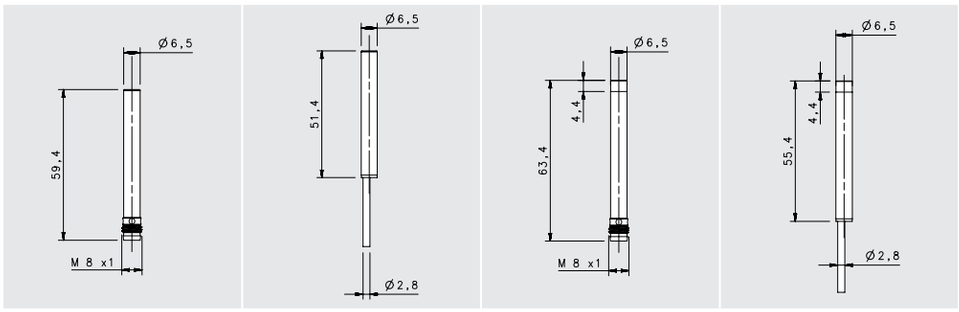

				STANDARD			
				FLUSH		NON FLUSH	
				M8 conn	cable	M8 conn	cable
NOMINAL SWITCHING DISTANCE				**1,5 mm**	**1,5 mm**	**2 mm**	**2 mm**
10-30 Vdc	PNP/NPN NO-NC	4 wires	order No.	---	---	---	---
				---	---	---	---
10-30 Vdc	PNP NO	3 wires	order No.	IS-65-A1-S1	IS-65-A1-03	IS-65-C1-S1	IS-65-C1-03
				95B066050	95B064730	95B066210	95B064890
10-30 Vdc	PNP NC	3 wires	order No.	IS-65-A2-S1	IS-65-A2-03	IS-65-C2-S1	IS-65-C2-03
				95B066090	95B064770	95B066250	95B066300
10-30 Vdc	NPN NO	3 wires	order No.	IS-65-A3-S1	IS-65-A3-03	IS-65-C3-S1	IS-65-C3-03
				95B064970	95B064650	95B066130	95B064810
10-30 Vdc	NPN NC	3 wires	order No.	IS-65-A4-S1	IS-65-A4-03	IS-65-C4-S1	IS-65-C4-03
				95B066010	95B064690	95B066170	95B064850
10-30 Vdc	PNP NO-NC	4 wires	order No.	---	---	---	---
				---	---	---	---
10-30 Vdc	NPN NO-NC	4 wires	order No.	---	---	---	---
				---	---	---	---
10-30 Vdc	NO-NC	2 wires	order No.	---	---	---	---
				---	---	---	---
20-250 Vac/Vdc	NO	2 wires	order No.	---	---	---	---
				---	---	---	---
20-250 Vac/Vdc	NC	2 wires	order No.	---	---	---	---
				---	---	---	---
20-250 Vac	NO	2/3wires	order No.	---	---	---	---
				---	---	---	---
10-30 Vdc	Analog 0-20 mA	3 wires	order No.	---	---	---	---
				---	---	---	---
NAMUR amplifier	NAMUR	2 wires	order No.	---	---	---	---
				---	---	---	---

Nominal Voltage	10-30 Vdc (-15/10%)	10-30 Vdc (-15/10%)	10-30 Vdc (-15/10%)	10-30 Vdc (-15/10%)
Residual Ripple	< 10%	< 10%	< 10%	< 10%
Hysteresis	< 10%	< 10%	< 10%	< 10%
Max. Output Current	200 mm	200 mA	200 mm	200 mA
Min. Output Current	---	---	---	---
Residual Current	< 1,6 mA	< 1,6 mA	< 1,6 mA	< 1,6 mA
Voltage Drop	< 1,2 V (I=100 mA)	< 1,2 V (I=100 mA)	< 1,2 V (I=100 mA)	< 1,2 V (I=100 mA)
Operation Led	Yellow	Yellow	Yellow	Yellow
Switching Frequency	1000 Hz	1000 Hz	1000 Hz	1000 Hz
Start Up Delay	< 50 ms	< 50 ms	< 50 ms	< 50 ms
Repeatability	< 3%	< 3%	< 3%	< 3%
Short Circuit Protection	Present (self-resetting)	Present (self-resetting)	Present (self-resetting)	Present (self-resetting)
Electric Protection	Against polarity reversal inductive loads	Against polarity reversal inductive loads	Against polarity reversal inductive loads	Against polarity reversal inductive loads
Temperature Limit	(-25 ... +70 °C)	(-25 ... +70 °C)	(-25 ... +70 °C)	(-25 ... +70 °C)
Protection Degree	IP67	IP67	IP67	IP67
Cable Length	---	2 m	---	2 m
Cable Section	---	3x 0,14 mm²	---	3x 0,14 mm²
Housing Material	Nickel-plated brass	Nickel-plated brass	Nickel-plated brass	Nickel-plated brass
Active Face	LCP	LCP	LCP	LCP
Tightening torque	---	---	---	---
Weight - Cable Output	---	80 g	---	80 g
Weight - Connector Output	40 g	---	40 g	---

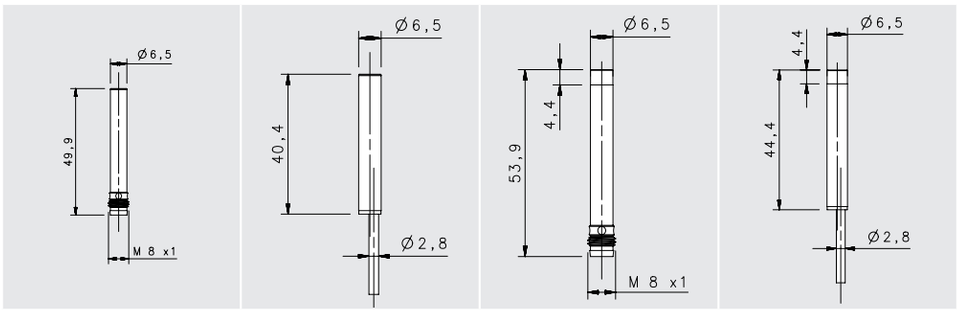

SHORT

FLUSH		NON FLUSH	
M8 conn	cable	M8 conn	cable
1,5 mm	**1,5 mm**	**2 mm**	**2 mm**
---	---	---	---
---	---	---	---
IS-65-B1-S1	IS-65-B1-03	IS-65-D1-S1	IS-65-D1-03
95B066070	95B064750	95B066230	95B064910
IS-65-B2-S1	IS-65-B2-03	IS-65-D2-S1	IS-65-D2-03
95B066110	95B064790	95B066270	95B064950
IS-65-B3-S1	IS-65-B3-03	IS-65-D3-S1	IS-65-D3-03
95B064990	95B064670	95B066150	95B064830
IS-65-B4-S1	IS-65-B4-03	IS-65-D4-S1	IS-65-D4-03
95B066030	95B064710	95B066190	95B066190
---	---	---	---
---	---	---	---
---	---	---	---
---	---	---	---
---	---	---	---
---	---	---	---
---	---	---	---
---	---	---	---
---	---	---	---
---	---	---	---
---	---	---	---
---	---	---	---
---	---	---	---
---	---	---	---
---	---	---	---
---	---	---	---
---	---	---	---
---	---	---	---
---	---	---	---
10-30 Vdc (-15/10%)	10-30 Vdc (-15/10%)	10-30 Vdc (-15/10%)	10-30 Vdc (-15/10%)
< 10%	< 10%	< 10%	< 10%
< 10%	< 10%	< 10%	< 10%
200 mA	200 mA	200 mA	200 mA
---	---	---	---
< 10 mA	< 10 mA	< 10 mA	< 10 mA
< 1,2 V (I=100mA)	< 1,2 V (I=100mA)	< 1,2 V (I=100mA)	< 1,2 V (I=100mA)
Yellow	Yellow	Yellow	Yellow
1000 Hz	1000 Hz	1000 Hz	1000 Hz
< 50 ms	< 50 ms	< 50 ms	< 50 ms
< 3%	< 3%	< 3%	< 3%
Present (self-resetting)	Present (self-resetting)	Present (self-resetting)	Present (self-resetting)
Against polarity reversal inductive loads	Against polarity reversal inductive loads	Against polarity reversal inductive loads	Against polarity reversal inductive loads
(-25 ... +70 °C)	(-25 ... +70 °C)	(-25 ... +70 °C)	(-25 ... +70 °C)
IP67	IP67	IP67	IP67
---	2 m	---	2 m
---	3 x 0,14 mm²	---	3 x 0,14 mm²
Nickel-plated brass	Nickel-plated brass	Nickel-plated brass	Nickel-plated brass
LCP	LCP	LCP	LCP
---	---	---	---
---	80 g	---	80 g
40 g	---	40 g	---

3 wires PNP or NPN

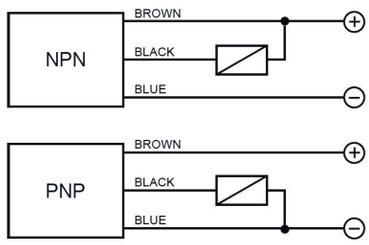

M8 3 pole

CONTACTS CONFIGURATION

Available	Contacts numbers		
	1 BROWN	3 BLUE	4 BLACK
NPN/PNP	+	–	NO/NC

BASIC M6.5

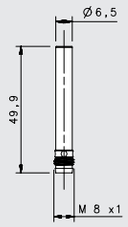

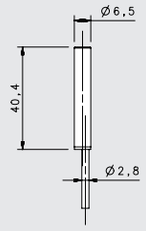

SHORT X2

FLUSH

				M8 conn	cable
NOMINAL SWITCHING DISTANCE				**2 mm**	**2 mm**
10-30 Vdc	PNP/NPN NO-NC	4 wires	order No.	---	---
				---	---
10-30 Vdc	PNP NO	3 wires	order No.	IS-65-G1-S1	IS-65-G1-03
				95B066060	95B064740
10-30 Vdc	PNP NC	3 wires	order No.	IS-65-G2-S1	IS-65-G2-03
				95B066100	95B064780
10-30 Vdc	NPN NO	3 wires	order No.	IS-65-G3-S1	IS-65-G3-03
				95B064980	95B064660
10-30 Vdc	NPN NC	3 wires	order No.	IS-65-G4-S1	IS-65-G4-03
				95B066020	95B064700
10-30 Vdc	PNP NO-NC	4 wires	order No.	---	---
				---	---
10-30 Vdc	NPN NO-NC	4 wires	order No.	---	---
				---	---
10-30 Vdc	NO-NC	2 wires	order No.	---	---
				---	---
20-250 Vac/Vdc	NO	2 wires	order No.	---	---
				---	---
20-250 Vac/Vdc	NC	2 wires	order No.	---	---
				---	---
20-250 Vac	NO	2/3wires	order No.	---	---
				---	---
10-30 Vdc	Analog 0-20 mA	3 wires	order No.	---	---
				---	---
NAMUR amplifier	NAMUR	2 wires	order No.	---	---
				---	---

Nominal Voltage	10-30 Vdc (-15/10%)	10-30 Vdc (-15/10%)
Residual Ripple	< 10%	< 10%
Hysteresis	< 10%	< 10%
Max. Output Current	200 mA	200 mA
Min. Output Current	---	---
Residual Current	< 10 mA	< 10 mA
Voltage Drop	< 1,2 V (I=100mA)	< 1,2 V (I=100mA)
Operation Led	Yellow	Yellow
Switching Frequency	500 Hz	500 Hz
Start Up Delay	< 75 ms	< 75 ms
Repeatability	< 3%	< 3%
Short Circuit Protection	Present (self-resetting)	Present (self-resetting)
Electric Protection	Against polarity reversal inductive loads	Against polarity reversal inductive loads
Temperature Limit	(-25 ... +70 °C)	(-25 ... +70 °C)
Protection Degree	IP67	IP67
Cable Length	---	2 m
Cable Section	---	3 x 0,14 mm²
Housing Material	Nickel-plated brass	Nickel-plated brass
Active face	LCP	LCP
Tightening torque	---	---
Weight - Cable Output	---	80 g
Weight - Connector Output	40 g	---

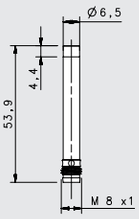

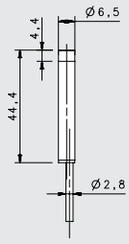

SHORT X 2

NON FLUSH

M8 conn	cable
3 mm	**3 mm**
---	---
---	---
IS-65-H1-S1	IS-65-H1-03
95B066220	95B064900
IS-65-H2-S1	IS-65-H2-03
95B066260	95B064940
IS-65-H3-S1	IS-65-H3-03
95B066140	95B064820
IS-65-H4-S1	IS-65-H4-03
95B066180	95B064860
---	---
---	---
---	---
---	---
---	---
---	---
---	---
---	---
---	---
---	---
---	---
---	---
---	---
---	---
---	---
---	---
---	---
10-30 Vdc (-15/10%)	10-30 Vdc (-15/10%)
< 10%	< 10%
< 10%	< 10%
200 mA	200 mA
---	---
< 10 mA	< 10 mA
< 1,2 V (I=100mA)	< 1,2 V (I=100mA)
Yellow	Yellow
500 Hz	500 Hz
< 75 ms	< 75 ms
< 3%	< 3%
Present (self-resetting)	Present (self-resetting)
Against polarity reversal inductive loads	Against polarity reversal inductive loads
(-25 ... +70 °C)	(-25 ... +70 °C)
IP67	IP67
---	2 m
---	3 x 0,14 mm²
Nickel-plated brass	Nickel-plated brass
LCP	LCP
---	---
---	80 g
40 g	---

3 wires PNP or NPN

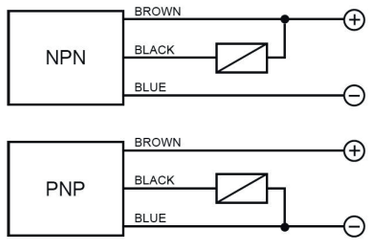

M8 3 pole

CONTACTS CONFIGURATION

Available	Contacts numbers		
	1 BROWN	3 BLUE	4 BLACK
NPN/PNP	+	–	NO/NC

BASIC M8

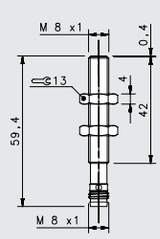

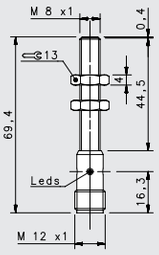

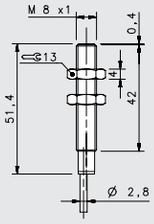

STANDARD

FLUSH

				M8 conn	M12 conn	cable
NOMINAL SWITCHING DISTANCE				**1,5 mm**	**1,5 mm**	**1,5 mm**
10-30 Vdc	PNP/NPN NO-NC	4 wires	order No.	---	---	---
				---	---	---
10-30 Vdc	PNP NO	3 wires	order No.	IS-08-A1-S1	IS-08-A1-S2	IS-08-A1-03
				95B061141	95B061131	95B061121
10-30 Vdc	PNP NC	3 wires	order No.	IS-08-A2-S1	IS-08-A2-S2	IS-08-A2-03
				95B061171	95B061161	95B061151
10-30 Vdc	NPN NO	3 wires	order No.	IS-08-A3-S1	IS-08-A3-S2	IS-08-A3-03
				95B061081	95B061071	95B061061
10-30 Vdc	NPN NC	3 wires	order No.	IS-08-A4-S1	IS-08-A4-S2	IS-08-A4-03
				95B061111	95B061101	95B061091
10-30 Vdc	PNP NO-NC	4 wires	order No.	---	---	---
				---	---	---
10-30 Vdc	NPN NO-NC	4 wires	order No.	---	---	---
				---	---	---
10-30 Vdc	NO-NC	2 wires	order No.	---	---	---
				---	---	---
20-250 Vac/Vdc	NO	2 wires	order No.	---	---	---
				---	---	---
20-250 Vac/Vdc	NC	2 wires	order No.	---	---	---
				---	---	---
20-250 Vac	NO	2/3 wires	order No.	---	---	---
				---	---	---
10-30 Vdc	Analog 0-20 mA	3 wires	order No.	---	---	---
				---	---	---
NAMUR amplifier	NAMUR	2 wires	order No.	---	---	---
				---	---	---

Nominal Voltage	10-30 Vdc (-15/10%)	10-30 Vdc (-15/10%)	10-30 Vdc (-15/10%)
Residual Ripple	< 10%	< 10%	< 10%
Hysteresis	< 10%	< 10%	< 10%
Max. Output Current	200mA	200mA	200mA
Min. Output Current	---	---	---
Residual Current	< 10 mA	< 10 mA	< 10 mA
Voltage Drop	< 1,2 V (I=100mA)	< 1,2 V (I=100mA)	< 1,2 V (I=100mA)
Operation Led	Yellow	Yellow	Yellow
Switching Frequency	1000 Hz	1000 Hz	1000 Hz
Start Up Delay	< 50 ms	< 50 ms	< 50 ms
Repeatability	< 3%	< 3%	< 3%
Short Circuit Protection	Present (self-resetting)	Present (self-resetting)	Present (self-resetting)
Electric Protection	Against polarity reversal inductive loads	Against polarity reversal inductive loads	Against polarity reversal inductive loads
Temperature Limit	(-25 ... +70 °C)	(-25 ... +70 °C)	(-25 ... +70 °C)
Protection Degree	IP67	IP67	IP67
Cable Length	---	---	2 m
Cable Section	---	---	3x 0,14 mm²
Housing Material	Nickel-plated brass	Nickel-plated brass	Nickel-plated brass
Active face	LCP	LCP	LCP
Tightening torque	* see page 5 of the Inductive Sensors Catalog	* see page 5 of the Inductive Sensors Catalog	* see page 5 of the Inductive Sensors Catalog
Weight - Cable Output			80 g
Weight - Connector Output	35g	55g	---

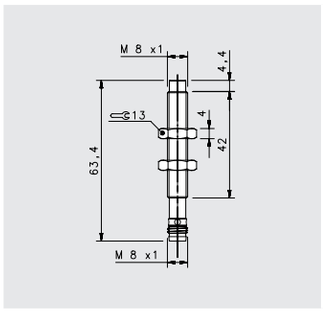

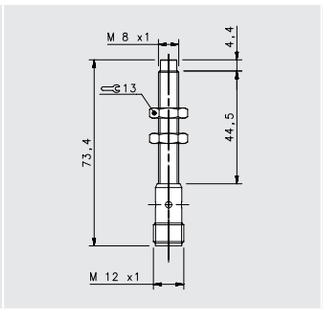

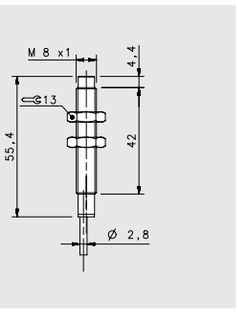

STANDARD		
NON FLUSH		
M8 conn	M12 conn	cable
2 mm	**2 mm**	**2 mm**
---	---	---
---	---	---
IS-08-C1-S1	IS-08-C1-S2	IS-08-C1-03
95B061541	95B061531	95B061521
IS-08-C2-S1	IS-08-C2-S2	IS-08-C2-03
95B061571	95B061561	95B061551
IS-08-C3-S1	IS-08-C3-S2	IS-08-C3-03
95B061481	95B061471	95B066410
IS-08-C4-S1	IS-08-C4-S2	IS-08-C4-03
95B061511	95B061501	95B066450
---	---	---
---	---	---
---	---	---
---	---	---
---	---	---
---	---	---
---	---	---
---	---	---
---	---	---
---	---	---
---	---	---
---	---	---
---	---	---
---	---	---
---	---	---
---	---	---
---	---	---
10-30 Vdc (-15/10%)	10-30 Vdc (-15/10%)	10-30 Vdc (-15/10%)
< 10%	< 10%	< 10%
< 10%	< 10%	< 10%
200mA	200mA	200mA
---	---	---
< 10 mA	< 10 mA	< 10 mA
< 1,2 V (I=100mA)	< 1,2 V (I=100mA)	< 1,2 V (I=100mA)
Yellow	Yellow	Yellow
1000 Hz	1000 Hz	1000 Hz
< 50 ms	< 50 ms	< 50 ms
< 3%	< 3%	< 3%
Present (self-resetting)	Present (self-resetting)	Present (self-resetting)
Against polarity reversal inductive loads	Against polarity reversal inductive loads	Against polarity reversal inductive loads
(-25 ... +70 °C)	(-25 ... +70 °C)	(-25 ... +70 °C)
IP67	IP67	IP67
---	---	2 m
---	---	3x 0,14 mm²
Nickel-plated brass	Nickel-plated brass	Nickel-plated brass
LCP	LCP	LCP
* see page 5 of the Inductive Sensors Catalog	* see page 5 of the Inductive Sensors Catalog	* see page 5 of the Inductive Sensors Catalog
		80 g
35g	55g	---

3 wires PNP or NPN

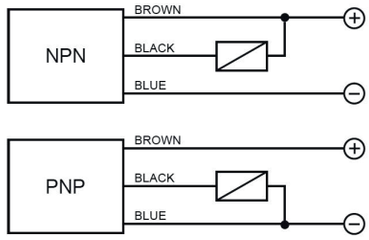

M12 3 pole

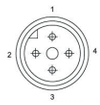

CONTACTS CONFIGURATION

Available	Contacts numbers			
	1	2	3	4
(NO or NC)	+		–	NO/NC

M8 3 pole

CONTACTS CONFIGURATION

Available	Contacts numbers		
	1 BROWN	3 BLUE	4 BLACK
NPN/PNP	+	–	NO/NC

BASIC M8

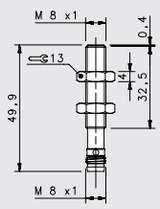

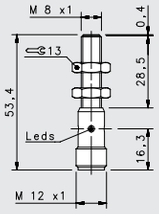

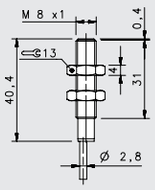

				SHORT		
				FLUSH		
				M8 conn	M12 conn	cable
NOMINAL SWITCHING DISTANCE				**1,5 mm**	**1,5 mm**	**1,5 mm**
10-30 Vdc	PNP/NPN NO-NC	4 wires	order No.	---	---	---
				---	---	---
10-30 Vdc	PNP NO	3 wires	order No.	IS-08-B1-S1	IS-08-B1-S2	IS-08-B1-03
				95B066860	95B066590	95B061921
10-30 Vdc	PNP NC	3 wires	order No.	IS-08-B2-S1	IS-08-B2-S2	IS-08-B2-03
				95B066890	95B066620	95B061951
10-30 Vdc	NPN NO	3 wires	order No.	IS-08-B3-S1	IS-08-B3-S2	IS-08-B3-03
				95B066810	95B066530	95B061861
10-30 Vdc	NPN NC	3 wires	order No.	IS-08-B4-S1	IS-08-B4-S2	IS-08-B4-03
				95B066830	95B066560	95B061891
10-30 Vdc	PNP NO-NC	4 wires	order No.	---	---	---
				---	---	---
10-30 Vdc	NPN NO-NC	4 wires	order No.	---	---	---
				---	---	---
10-30 Vdc	NO-NC	2 wires	order No.	---	---	---
				---	---	---
20-250 Vac/Vdc	NO	2 wires	order No.	---	---	---
				---	---	---
20-250 Vac/Vdc	NC	2 wires	order No.	---	---	---
				---	---	---
20-250 Vac	NO	2/3 wires	order No.	---	---	---
				---	---	---
10-30 Vdc	Analog 0-20 mA	3 wires	order No.	---	---	---
				---	---	---
NAMUR amplifier	NAMUR	2 wires	order No.	---	---	---
				---	---	---

Nominal Voltage	10-30 Vdc (-15/10%)	10-30 Vdc (-15/10%)	10-30 Vdc (-15/10%)
Residual Ripple	< 10%	< 10%	< 10%
Hysteresis	< 10%	< 10%	< 10%
Max. Output Current	200mA	200mA	200mA
Min. Output Current	---	---	---
Residual Current	< 10 mA	< 10 mA	< 10 mA
Voltage Drop	< 1,2 V (I=100mA)	< 1,2 V (I=100mA)	< 1,2 V (I=100mA)
Operation Led	Yellow	Yellow	Yellow
Switching Frequency	1000 Hz	1000 Hz	1000 Hz
Start Up Delay	< 50 ms	< 50 ms	< 50 ms
Repeatability	< 3%	< 3%	< 3%
Short Circuit Protection	Present (self-resetting)	Present (self-resetting)	Present (self-resetting)
Electric Protection	Against polarity reversal inductive loads	Against polarity reversal inductive loads	Against polarity reversal inductive loads
Temperature Limit	(-25 ... +70 °C)	(-25 ... +70 °C)	(-25 ... +70 °C)
Protection Degree	IP67	IP67	IP67
Cable Length	---	---	2 m
Cable Section	---	---	3 x 0,14 mm²
Housing Material	Nickel-plated brass	Nickel-plated brass	Nickel-plated brass
Active face	LCP	LCP	LCP
Tightening torque	* see page 5 of the Inductive Sensors Catalog	* see page 5 of the Inductive Sensors Catalog	* see page 5 of the Inductive Sensors Catalog
Weight - Cable Output			80 g
Weight - Connector Output	35g	55g	---

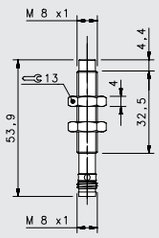

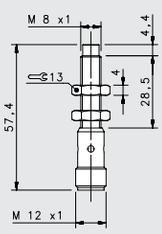

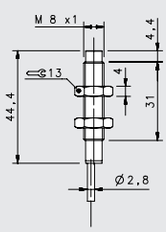

SHORT		
NON FLUSH		
M8 conn	M12 conn	cable
2 mm	**2 mm**	**2 mm**
---	---	---
---	---	---
IS-08-D1-S1	IS-08-D1-S2	IS-08-D1-03
95B066970	95B066700	95B062321
IS-08-D2-S1	IS-08-D2-S2	IS-08-D2-03
95B067000	95B066720	95B062351
IS-08-D3-S1	IS-08-D3-S2	IS-08-D3-03
95B066920	95B066650	95B066430
IS-08-D4-S1	IS-08-D4-S2	IS-08-D4-03
95B066940	95B066670	95B062291
---	---	---
---	---	---
---	---	---
---	---	---
---	---	---
---	---	---
---	---	---
---	---	---
---	---	---
---	---	---
---	---	---
---	---	---
---	---	---
---	---	---
---	---	---
---	---	---
---	---	---
10-30 Vdc (-15/10%)	10-30 Vdc (-15/10%)	10-30 Vdc (-15/10%)
< 10%	< 10%	< 10%
< 10%	< 10%	< 10%
200mA	200mA	200mA
---	---	---
< 10 mA	< 10 mA	< 10 mA
< 1,2 V (I=100mA)	< 1,2 V (I=100mA)	< 1,2 V (I=100mA)
Yellow	Yellow	Yellow
1000 Hz	1000 Hz	1000 Hz
< 50 ms	< 50 ms	< 50 ms
< 3%	< 3%	< 3%
Present (self-resetting)	Present (self-resetting)	Present (self-resetting)
Against polarity reversal inductive loads	Against polarity reversal inductive loads	Against polarity reversal inductive loads
(-25 ... +70 °C)	(-25 ... +70 °C)	(-25 ... +70 °C)
IP67	IP67	IP67
---	---	2 m
---	---	3 x 0,14 mm²
Nickel-plated brass	Nickel-plated brass	Nickel-plated brass
LCP	LCP	LCP
* see page 5 of the Inductive Sensors Catalog	* see page 5 of the Inductive Sensors Catalog	* see page 5 of the Inductive Sensors Catalog
		80 g
35g	55g	---

3 wires PNP or NPN

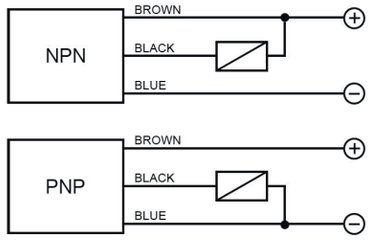

M12 3 pole

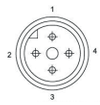

CONTACTS CONFIGURATION

Available	Contacts numbers			
	1	2	3	4
(NO or NC)	+		–	NO/NC

M8 3 pole

CONTACTS CONFIGURATION

Available	Contacts numbers		
	1 BROWN	3 BLUE	4 BLACK
NPN/PNP	+	–	NO/NC

BASIC M8

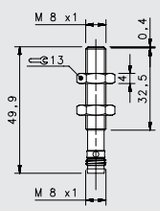

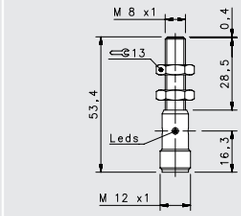

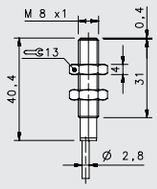

SHORT X2

FLUSH

				M8 conn	M12 conn	cable
NOMINAL SWITCHING DISTANCE				**2 mm**	**2 mm**	**2 mm**
10-30 Vdc	PNP/NPN NO-NC	4 wires	order No.	---	---	---
				---	---	---
10-30 Vdc	PNP NO	3 wires	order No.	IS-08-G1-S1	IS-08-G1-S2	IS-08-G1-03
				95B066850	95B066580	95B066370
10-30 Vdc	PNP NC	3 wires	order No.	IS-08-G2-S1	IS-08-G2-S2	IS-08-G2-03
				95B066880	95B066610	95B066390
10-30 Vdc	NPN NO	3 wires	order No.	IS-08-G3-S1	IS-08-G3-S2	IS-08-G3-03
				95B066800	95B066520	95B066330
10-30 Vdc	NPN NC	3 wires	order No.	IS-08-G4-S1	IS-08-G4-S2	IS-08-G4-03
				95B063131	95B066550	95B066350
10-30 Vdc	PNP NO-NC	4 wires	order No.	---	---	---
				---	---	---
10-30 Vdc	NPN NO-NC	4 wires	order No.	---	---	---
				---	---	---
10-30 Vdc	NO-NC	2 wires	order No.	---	---	---
				---	---	---
20-250 Vac/Vdc	NO	2 wires	order No.	---	---	---
				---	---	---
20-250 Vac/Vdc	NC	2 wires	order No.	---	---	---
				---	---	---
20-250 Vac	NO	2/3 wires	order No.	---	---	---
				---	---	---
10-30 Vdc	Analog 0-20 mA	3 wires	order No.	---	---	---
				---	---	---
NAMUR amplifier	NAMUR	2 wires	order No.	---	---	---
				---	---	---

Nominal Voltage	10-30 Vdc (-15/10%)	10-30 Vdc (-15/10%)	10-30 Vdc (-15/10%)
Residual Ripple	< 10%	< 10%	< 10%
Hysteresis	< 10%	< 10%	< 10%
Max. Output Current	200mA	200mA	200mA
Min. Output Current	---	---	---
Residual Current	< 10 mA	< 10 mA	< 10 mA
Voltage Drop	< 1,2 V (I=100mA)	< 1,2 V (I=100mA)	< 1,2 V (I=100mA)
Operation Led	Yellow	Yellow	Yellow
Switching Frequency	500 Hz	500 Hz	500 Hz
Start Up Delay	< 75 ms	< 75 ms	< 75 ms
Repeatability	< 3%	< 3%	< 3%
Short Circuit Protection	Present (self-resetting)	Present (self-resetting)	Present (self-resetting)
Electric Protection	Against polarity reversal inductive loads	Against polarity reversal inductive loads	Against polarity reversal inductive loads
Temperature Limit	(-25 ... +60 °C)	(-25 ... +60 °C)	(-25 ... +70 °C)
Protection Degree	IP67	IP67	IP67
Cable Length	---	---	2 m
Cable Section	---	---	3 x 0,14 mm²
Housing Material	Nickel-plated brass	Nickel-plated brass	Nickel-plated brass
Active face	LCP	LCP	LCP
Tightening torque	* see page 5 of the Inductive Sensors Catalog	* see page 5 of the Inductive Sensors Catalog	* see page 5 of the Inductive Sensors Catalog
Weight - Cable Output			80 g
Weight - Connector Output	35g	55g	---

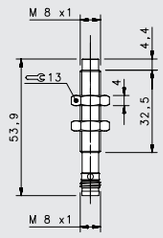

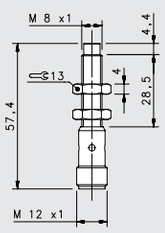

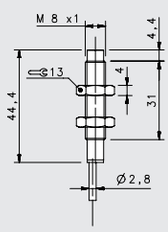

SHORT X2

NON FLUSH

M8 conn	M12 conn	cable
3 mm	**3 mm**	**3 mm**
---	---	---
---	---	---
IS-08-H1-S1	IS-08-H1-S2	IS-08-H1-03
95B066960	95B066690	95B066480
IS-08-H2-S1	IS-08-H2-S2	IS-08-H2-03
95B066990	95B063301	95B066500
IS-08-H3-S1	IS-08-H3-S2	IS-08-H3-03
95B066910	95B066640	95B066420
IS-08-H4-S1	IS-08-H4-S2	IS-08-H4-03
95B063251	95B063241	95B066460
---	---	---
---	---	---
---	---	---
---	---	---
---	---	---
---	---	---
---	---	---
---	---	---
---	---	---
---	---	---
---	---	---
---	---	---
---	---	---
---	---	---
---	---	---
---	---	---
---	---	---
---	---	---
10-30 Vdc (-15/10%)	10-30 Vdc (-15/10%)	10-30 Vdc (-15/10%)
< 10%	< 10%	< 10%
< 10%	< 10%	< 10%
200mA	200mA	200mA
---	---	---
< 10 mA	< 10 mA	< 10 mA
< 1,2 V (I=100mA)	< 1,2 V (I=100mA)	< 1,2 V (I=100mA)
Yellow	Yellow	Yellow
500 Hz	500 Hz	500 Hz
< 75 ms	< 75 ms	< 75 ms
< 3%	< 3%	< 3%
Present (self-resetting)	Present (self-resetting)	Present (self-resetting)
Against polarity reversal inductive loads	Against polarity reversal inductive loads	Against polarity reversal inductive loads
(-25 ... +60 °C)	(-25 ... +60 °C)	(-25 ... +70 °C)
IP67	IP67	IP67
---	---	2 m
---	---	3 x 0,14 mm²
Nickel-plated brass	Nickel-plated brass	Nickel-plated brass
LCP	LCP	LCP
* see page 5 of the Inductive Sensors Catalog	* see page 5 of the Inductive Sensors Catalog	* see page 5 of the Inductive Sensors Catalog
		80 g
35g	55g	---

3 wires PNP or NPN

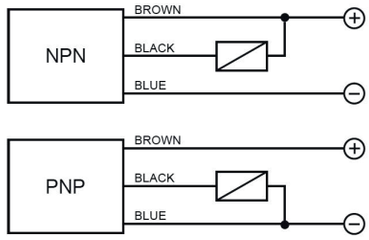

M12 3 pole

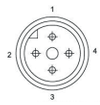

CONTACTS CONFIGURATION

Available	Contacts numbers			
	1	2	3	4
(NO or NC)	+		–	NO/NC

M8 3 pole

CONTACTS CONFIGURATION

Available	Contacts numbers		
	1 BROWN	3 BLUE	4 BLACK
NPN/PNP	+	–	NO/NC

BASIC M12

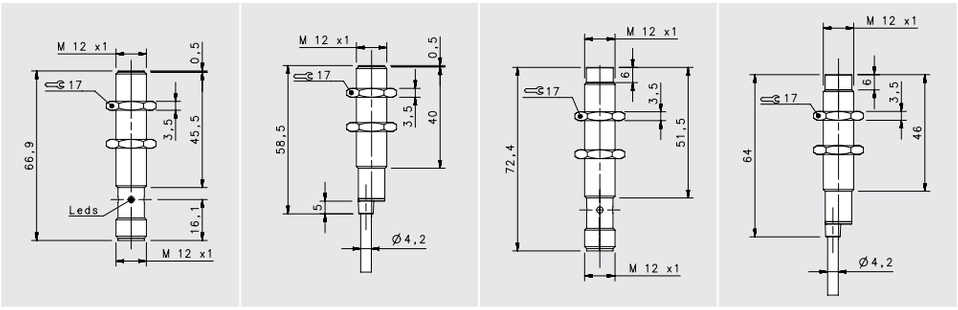

				STANDARD			
				FLUSH		NON FLUSH	
				M12 conn	cable	M12 conn	cable
NOMINAL SWITCHING DISTANCE				**2 mm**	**2 mm**	**4 mm**	**4 mm**
10-30 Vdc	PNP/NPN NO-NC	4 wires	order No.	IS-12-A0-S2	IS-12-A0-03	IS-12-C0-S2	IS-12-C0-03
				95B064060	95B064030	95B064080	95B064040
10-30 Vdc	PNP NO	3 wires	order No.	IS-12-A1-S2	IS-12-A1-03	IS-12-C1-S2	IS-12-C1-03
				95B061251	95B061241	95B061651	95B061641
10-30 Vdc	PNP NC	3 wires	order No.	IS-12-A2-S2	IS-12-A2-03	IS-12-C2-S2	IS-12-C2-03
				95B061281	95B061271	95B061681	95B061671
10-30 Vdc	NPN NO	3 wires	order No.	IS-12-A3-S2	IS-12-A3-03	IS-12-C3-S2	IS-12-C3-03
				95B061191	95B061181	95B061591	95B061581
10-30 Vdc	NPN NC	3 wires	order No.	IS-12-A4-S2	IS-12-A4-03	IS-12-C4-S2	IS-12-C4-03
				95B061221	95B061211	95B061621	95B061611
10-30 Vdc	PNP NO-NC	4 wires	order No.	---	---	---	---
				---	---	---	---
10-30 Vdc	NPN NO-NC	4 wires	order No.	---	---	---	---
				---	---	---	---
10-30 Vdc	NO-NC	2 wires	order No.	IS-12-A9-S2	IS-12-A9-03	IS-12-C9-S2	IS-12-C9-03
				95B063931	95B064100	95B064140	95B064110
20-250 Vac/Vdc	NO	2 wires	order No.	---	---	---	---
				---	---	---	---
20-250 Vac/Vdc	NC	2 wires	order No.	---	---	---	---
				---	---	---	---
20-250 Vac	NO	2/3wires	order No.	---	---	---	---
				---	---	---	---
10-30 Vdc	Analog 0-20 mA	3 wires	order No.	---	---	---	---
				---	---	---	---
NAMUR amplifier	NAMUR	2 wires	order No.	---	---	---	---
				---	---	---	---

Nominal Voltage	10-30 Vdc (-15/10%)	10-30 Vdc (-15/10%)	10-30 Vdc (-15/10%)	10-30 Vdc (-15/10%)
Residual Ripple	< 10%	< 10%	< 10%	< 10%
Hysteresis	< 10%	< 10%	< 10%	< 10%
Max. Output Current	200mA; 100 mA (2wires)	200mA; 100 mA (2wires)	200mA; 100 mA (2wires)	200mA; 100 mA (2wires)
Min. Output Current	> 1,6 mA (2wires)	> 1,6 mA (2wires)	> 1,6 mA (2wires)	> 1,6 mA (2wires)
Residual Current	< 10mA; < 1,6 mA (2wires)	< 10mA; < 1,6 mA (2wires)	< 10mA; < 1,6 mA (2wires)	< 10mA; < 1,6 mA (2wires)
Voltage Drop	< 1,8V; < 6,5 V (2wires)	< 1,8V; < 6,5 V (2wires)	< 1,8V; < 6,5 V (2wires)	< 1,8V; < 6,5 V (2wires)
Operation Led	Yellow	Yellow	Yellow	Yellow
Switching Frequency	1000 Hz/200 Hz (2 wires NO-NC)	1000 Hz/200 Hz (2 wires NO-NC)	1000 Hz/200 Hz (2 wires NO-NC)	1000 Hz/200 Hz (2 wires NO-NC)
Start Up Delay	< 50 ms	< 50 ms	< 50 ms	< 50 ms
Repeatability	< 3%	< 3%	< 3%	< 3%
Short Circuit Protection	Present (self-resetting)	Present (self-resetting)	Present (self-resetting)	Present (self-resetting)
Electric Protection	Against polarity reversal inductive loads	Against polarity reversal inductive loads	Against polarity reversal inductive loads	Against polarity reversal inductive loads
Temperature Limit	(-25 ... +70 °C)	(-25 ... +70 °C)	(-25 ... +70 °C)	(-25 ... +70 °C)
Protection Degree	IP67	IP67	IP67	IP67
Cable Length	---	2 m	---	2 m
Cable Section	---	2 x 0,34 mm² 3 x 0,14 mm² 4 x 0,25 mm²	---	2 x 0,34 mm² 3 x 0,14 mm² 4 x 0,25 mm²
Housing Material	Nickel-plated brass	Nickel-plated brass	Nickel-plated brass	Nickel-plated brass
Active face	LCP	LCP	LCP	LCP
Tightening torque	* see page 5 of the Inductive Sensors Catalog	* see page 5 of the Inductive Sensors Catalog	* see page 5 of the Inductive Sensors Catalog	* see page 5 of the Inductive Sensors Catalog
Weight - Cable Output	---	110 g	---	110 g
Weight - Connector Output	60 g	---	60 g	---

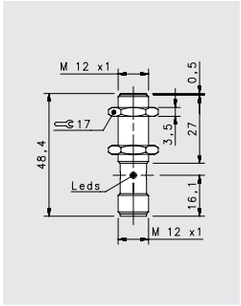

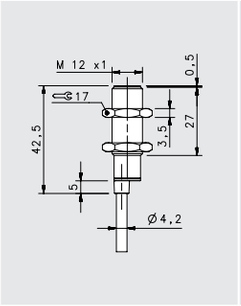

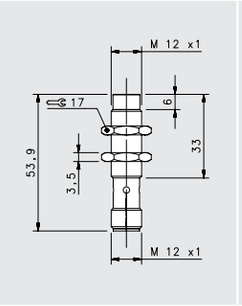

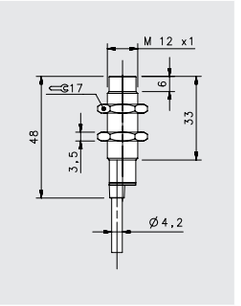

SHORT			
FLUSH		**NON FLUSH**	
M12 conn	cable	M12conn	cable
2 mm	**2 mm**	**4 mm**	**4 mm**
---	---	---	---
---	---	---	---
IS-12-B1-S2	IS-12-B1-03	IS-12-D1-S2	IS-12-D1-03
95B062051	95B062041	95B062451	95B062441
IS-12-B2-S2	IS-12-B2-03	IS-12-D2-S2	IS-12-D2-03
95B062081	95B062071	95B062481	95B062471
IS-12-B3-S2	IS-12-B3-03	IS-12-D3-S2	IS-12-D3-03
95B061991	95B061981	95B062391	95B062381
IS-12-B4-S2	IS-12-B4-03	IS-12-D4-S2	IS-12-D4-03
95B062021	95B062011	95B062421	95B062411
---	---	---	---
---	---	---	---
---	---	---	---
---	---	---	---
---	---	---	---
---	---	---	---
---	---	---	---
---	---	---	---
---	---	---	---
---	---	---	---
---	---	---	---
---	---	---	---
---	---	---	---
---	---	---	---
---	---	---	---
---	---	---	---
---	---	---	---
---	---	---	---
10-30 Vdc (-15/10%)	10-30 Vdc (-15/10%)	10-30 Vdc (-15/10%)	10-30 Vdc (-15/10%)
< 10%	< 10%	< 10%	< 10%
< 10%	< 10%	< 10%	< 10%
200 mA	200 mA	200 mA	200 mA
---	---	---	---
< 10 mA	< 10 mA	< 10 mA	< 10 mA
< 1,8 V (I=100mA)	< 1,8 V (I=100mA)	< 1,8 V (I=100mA)	< 1,8 V (I=100mA)
Yellow	Yellow	Yellow	Yellow
1000 Hz	1000 Hz	1000 Hz	1000 Hz
< 50 ms	< 50 ms	< 50 ms	< 50 ms
< 3%	< 3%	< 3%	< 3%
Present (self-resetting)	Present (self-resetting)	Present (self-resetting)	Present (self-resetting)
Against polarity reversal inductive loads	Against polarity reversal inductive loads	Against polarity reversal inductive loads	Against polarity reversal inductive loads
(-25 ... +60 °C)	(-25 ... +70 °C)	(-25 ... +60 °C)	(-25 ... +70 °C)
IP67	IP67	IP67	IP67
	2 m	---	2 m
	3 x 0,14 mm²	---	3 x 0,14 mm²
Nickel-plated brass	Nickel-plated brass	Nickel-plated brass	Nickel-plated brass
LCP	LCP	LCP	LCP
* see page 5 of the Inductive Sensors Catalog	* see page 5 of the Inductive Sensors Catalog	* see page 5 of the Inductive Sensors Catalog	* see page 5 of the Inductive Sensors Catalog
---	110 g	---	110 g
60 g	---	60 g	---

2 wires NO or NC

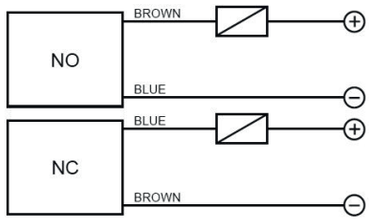

3 wires PNP or NPN

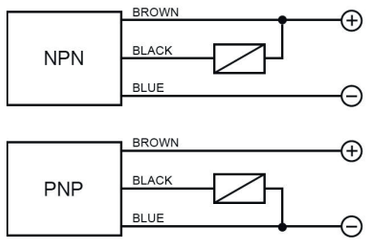

4 wires (PNP/NPN, NO/NC)

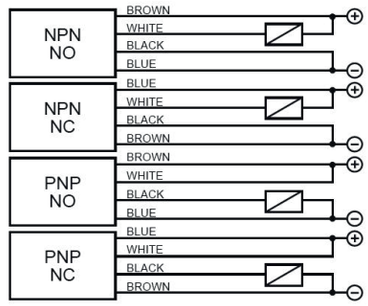

M12 connector - connections

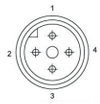

2 wires NO or NC

CONTACTS CONFIGURATION

Available	Contacts numbers			
	1	2	3	4
NO	+		–	
NC	–		+	

3 wires

CONTACTS CONFIGURATION

Available	Contacts numbers			
	1	2	3	4
(NO or NC)	+		–	NO/NC

4 wires (PNP/NPN, NO/NC)

CONTACTS CONFIGURATION

Output	Contacts numbers			
	1	2	3	4
NPN NO	+	NO	–	–
NPN NC	–	NC	+	–
PNP NO	+	+	–	NO
PNP NC	–	+	+	NC

BASIC M12

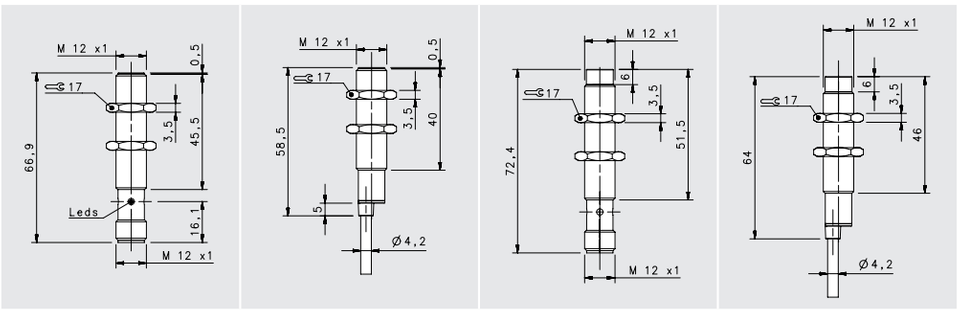

				STANDARD X2			
				FLUSH		NON FLUSH	
				M12 conn	cable	M12 conn	cable
NOMINAL SWITCHING DISTANCE				**4 mm**		**8 mm**	
10-30 Vdc	PNP/NPN NO-NC	4 wires	order No.	IS-12-E0-S2 95B067230	IS-12-E0-03 95B067190	IS-12-F0-S2 95B067250	IS-12-F0-03 95B067210
10-30 Vdc	PNP NO	3 wires	order No.	IS-12-E1-S2 95B067030	IS-12-E1-03 95B067670	IS-12-F1-S2 95B067020	IS-12-F1-03 95B067740
10-30 Vdc	PNP NC	3 wires	order No.	IS-12-E2-S2 95B067640	IS-12-E2-03 95B067680	IS-12-F2-S2 95B067710	IS-12-F2-03 95B067750
10-30 Vdc	NPN NO	3 wires	order No.	IS-12-E3-S2 95B067650	IS-12-E3-03 95B067690	IS-12-F3-S2 95B067720	IS-12-F3-03 95B067760
10-30 Vdc	NPN NC	3 wires	order No.	IS-12-E4-S2 95B067660	IS-12-E4-03 95B067700	IS-12-F4-S2 95B067730	IS-12-F4-03 95B067770
10-30 Vdc	PNP NO-NC	4 wires	order No.	--- ---	--- ---	--- ---	--- ---
10-30 Vdc	NPN NO-NC	4 wires	order No.	--- ---	--- ---	--- ---	--- ---
10-30 Vdc	NO-NC	2 wires	order No.	IS-12-E9-S2 95B067240	IS-12-E9-03 95B067200	IS-12-F9-S2 95B067260	IS-12-F9-03 95B067220
20-250 Vac/Vdc	NO	2 wires	order No.	--- ---	--- ---	--- ---	--- ---
20-250 Vac/Vdc	NC	2 wires	order No.	--- ---	--- ---	--- ---	--- ---
20-250 Vac	NO	2/3wires	order No.	--- ---	--- ---	--- ---	--- ---
10-30 Vdc	Analog 0-20 mA	3 wires	order No.	--- ---	--- ---	--- ---	--- ---
NAMUR amplifier	NAMUR	2 wires	order No.	--- ---	--- ---	--- ---	--- ---

Nominal Voltage	10-30 Vdc (-15/10%)	10-30 Vdc (-15/10%)	10-30 Vdc (-15/10%)	10-30 Vdc (-15/10%)
Residual Ripple	< 10%	< 10%	< 10%	< 10%
Hysteresis	< 10%	< 10%	< 10%	< 10%
Max. Output Current	100 mA	100 mA	100 mA	100 mA
Min. Output Current	---	---	---	---
Residual Current	< 10 mA	< 10 mA	< 10 mA	< 10 mA
Voltage Drop	< 1,2 V (I=100mA)	< 1,2 V (I=100mA)	< 1,2 V (I=100mA)	< 1,2 V (I=100mA)
Operation Led	Yellow	Yellow	Yellow	Yellow
Switching Frequency	500 Hz/200 Hz (2 wires NO-NC)	500 Hz/200 Hz (2 wires NO-NC)	400 Hz/200 Hz (2 wires NO-NC)	400 Hz/200 Hz (2 wires NO-NC)
Start Up Delay	< 75 ms	< 75 ms	< 75 ms	< 75 ms
Repeatability	< 3%	< 3%	< 3%	< 3%
Short Circuit Protection	Present (self-resetting)	Present (self-resetting)	Present (self-resetting)	Present (self-resetting)
Electric Protection	Against polarity reversal inductive loads	Against polarity reversal inductive loads	Against polarity reversal inductive loads	Against polarity reversal inductive loads
Temperature Limit	(-25 ... +70 °C)	(-25 ... +70 °C)	(-25 ... +70 °C)	(-25 ... +70 °C)
Protection Degree	IP67	IP67	IP67	IP67
Cable Length	---	---	---	---
Cable Section	---	2 x 0,34 mm² 3 x 0,14 mm² 4 x 0,25 mm²	---	2 x 0,34 mm² 3 x 0,14 mm² 4 x 0,25 mm²
Housing Material	Nickel-plated brass	Nickel-plated brass	Nickel-plated brass	Nickel-plated brass
Active face	LCP	LCP	LCP	LCP
Tightening torque	* see page 5 of the Inductive Sensors Catalog	* see page 5 of the Inductive Sensors Catalog	* see page 5 of the Inductive Sensors Catalog	* see page 5 of the Inductive Sensors Catalog
Weight - Cable Output	---	---	---	---
Weight - Connector Output	60 g	60 g	60 g	60 g

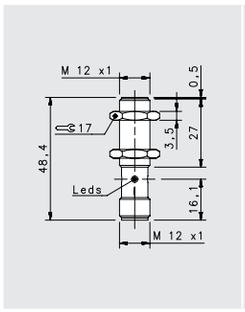

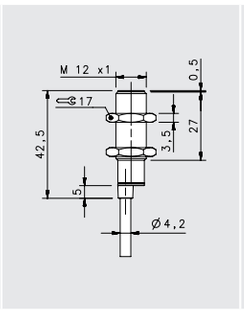

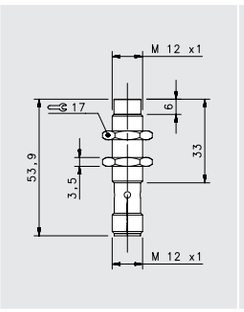

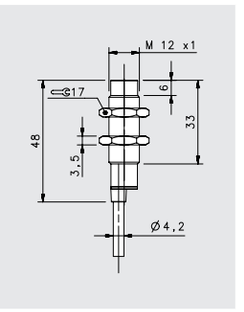

SHORT X2

FLUSH		NON FLUSH	
M12 con	cable	M12 conn	cable
4 mm	**4 mm**	**8 mm**	**8 mm**
---	---	---	---
---	---	---	---
IS-12-G1-S2	IS-12-G1-03	IS-12-H1-S2	IS-12-H1-03
95B063371	95B063361	95B063451	95B063441
IS-12-G2-S2	IS-12-G2-03	IS-12-H2-S2	IS-12-H2-03
95B063391	95B063381	95B063471	95B063461
IS-12-G3-S2	IS-12-G3-03	IS-12-H3-S2	IS-12-H3-03
95B063331	95B063321	95B063411	95B063401
IS-12-G4-S2	IS-12-G4-03	IS-12-H4-S2	IS-12-H4-03
95B063351	95B063341	95B063431	95B063421
IS-12-G5-S2	IS-12-G5-03	IS-12-H5-S2	IS-12-H5-03
95B062691	95B062681	95B062771	95B062761
IS-12-G6-S2	IS-12-G6-03	IS-12-H6-S2	IS-12-H6-03
95B062671	95B062661	95B062751	95B062741
---	---	---	---
---	---	---	---
---	---	---	---
---	---	---	---
---	---	---	---
---	---	---	---
---	---	---	---
---	---	---	---
---	---	---	---
---	---	---	---
---	---	---	---
---	---	---	---
---	---	---	---
10-30 Vdc (-15/10%)	10-30 Vdc (-15/10%)	10-30 Vdc (-15/10%)	10-30 Vdc (-15/10%)
< 10%	< 10%	< 10%	< 10%
< 10%	< 10%	< 10%	< 10%
200 mA	200 mA	200 mA	200 mA
> 1,6 mA (2wires ver.)	> 1,6 mA (2wires ver.)	> 1,6 mA (2wires ver.)	> 1,6 mA (2wires ver.)
< 10 mA	< 10 mA	< 10 mA	< 10 mA
< 1,2 V (I=100mA)	< 1,2 V (I=100mA)	< 1,2 V (I=100mA)	< 1,2 V (I=100mA)
Yellow	Yellow	Yellow	Yellow
500 Hz/200 Hz (4 wires NO-NC)	500 Hz/200 Hz (4 wires NO-NC)	500 Hz/200 Hz (4 wires NO-NC)	500 Hz/200 Hz (4 wires NO-NC)
< 75 ms	< 75 ms	< 75 ms	< 75 ms
< 3%	< 3%	< 3%	< 3%
Present (self-resetting)	Present (self-resetting)	Present (self-resetting)	Present (self-resetting)
Against polarity reversal inductive loads	Against polarity reversal inductive loads	Against polarity reversal inductive loads	Against polarity reversal inductive loads
(-25 ... +70 °C)	(-25 ... +70 °C)	(-25 ... +70 °C)	(-25 ... +70 °C)
IP67	IP67	IP67	IP67
---	2 m		2 m
---	3 x 0,14 mm² 4 x 0,25 mm²		3 x 0,14 mm² 4 x 0,25 mm²
Nickel-plated brass	Nickel-plated brass	Nickel-plated brass	Nickel-plated brass
LCP	LCP	LCP	LCP
* see page 5 of the Inductive Sensors Catalog	* see page 5 of the Inductive Sensors Catalog	* see page 5 of the Inductive Sensors Catalog	* see page 5 of the Inductive Sensors Catalog
---	110 g	---	110 g
60 g	---	60 g	---

2 wires NO or NC

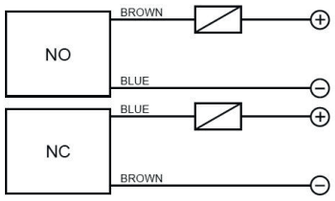

3 wires PNP or NPN

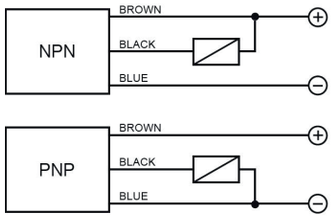

4 wires (PNP/NPN, NO/NC)

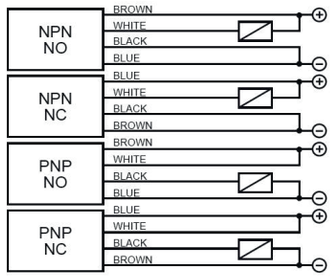

4 wires (NO+NC)

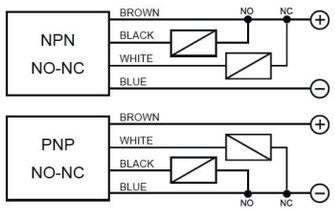

M12 connector *connections*

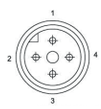

2 wires NO or NC

CONTACTS CONFIGURATION

Available	Contacts numbers			
	1	2	3	4
NO	+		–	
NC	–		+	

3 wires

CONTACTS CONFIGURATION

Available	Contacts numbers			
	1	2	3	4
(NO or NC)	+		–	NO/NC

4 wires (PNP/NPN, NO/NC)

CONTACTS CONFIGURATION

Output	Contacts numbers			
	1	2	3	4
NPN NO	+	NO	–	–
NPN NC	–	NC	+	–
PNP NO	+	+	–	NO
PNP NC	–	+	+	NC

4 wires (NO+NC)

Available	Contacts numbers			
	1	2	3	4
(NO + NC)	+	NC	–	NO

BASIC M18

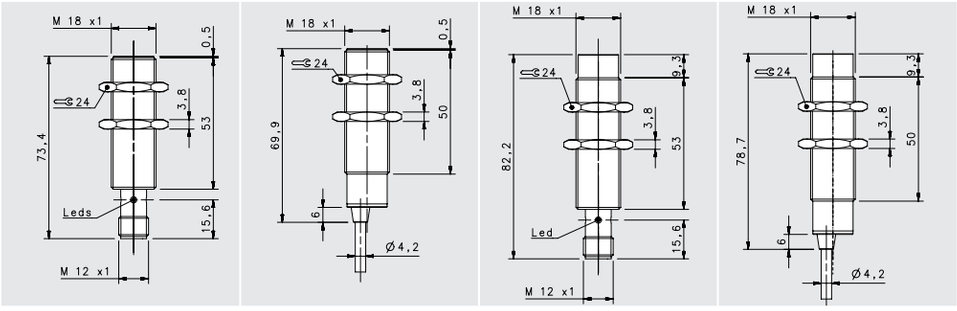

				STANDARD			
				FLUSH		NON FLUSH	
				M12 conn	cable	M12 conn	cable
NOMINAL SWITCHING DISTANCE				**5 mm**	**5 mm**	**8 mm**	**8 mm**
10-30 Vdc	PNP/NPN NO-NC	4 wires	order No.	IS-18-A0-S2	IS-18-A0-03	IS-18-C0-S2	IS-18-C0-03
				95B064260	95B064230	95B064280	95B064240
10-30 Vdc	PNP NO	3 wires	order No.	IS-18-A1-S2	IS-18-A1-03	IS-18-C1-S2	IS-18-C1-03
				95B061351	95B061341	95B061751	95B061741
10-30 Vdc	PNP NC	3 wires	order No.	IS-18-A2-S2	IS-18-A2-03	IS-18-C2-S2	IS-18-C2-03
				95B061371	95B061361	95B061771	95B061761
10-30 Vdc	NPN NO	3 wires	order No.	IS-18-A3-S2	IS-18-A3-03	IS-18-C3-S2	IS-18-C3-03
				95B061311	95B061301	95B061711	95B061701
10-30 Vdc	NPN NC	3 wires	order No.	IS-18-A4-S2	IS-18-A4-03	IS-18-C4-S2	IS-18-C4-03
				95B061331	95B061321	95B061731	95B061721
10-30 Vdc	PNP NO-NC	4 wires	order No.	---	---	---	---
				---	---	---	---
10-30 Vdc	NPN NO-NC	4 wires	order No.	---	---	---	---
				---	---	---	---
10-30 Vdc	NO-NC	2 wires	order No.	IS-18-A9-S2	S-18-A9-03	IS-18-C9-S2	IS-18-C9-03
				95B063941	95B064300	95B064340	95B064310
20-250 Vac/Vdc	NO	2 wires	order No.	---	---	---	---
				---	---	---	---
20-250 Vac/Vdc	NC	2 wires	order No.	---	---	---	---
				---	---	---	---
20-250 Vac	NO	2/3wires	order No.	---	---	---	---
				---	---	---	---
10-30 Vdc	Analog 0-20 mA	3 wires	order No.	---	---	---	---
				---	---	---	---
NAMUR amplifier	NAMUR	2 wires	order No.	---	---	---	---
				---	---	---	---

Nominal Voltage	10-30 Vdc (-15/10%)	10-30 Vdc (-15/10%)	10-30 Vdc (-15/10%)	10-30 Vdc (-15/10%)
Residual Ripple	< 10%	< 10%	< 10%	< 10%
Hysteresis	< 10%	< 10%	< 10%	< 10%
Max. Output Current	200 mA	200 mA	200 mA	200 mA
Min. Output Current	> 1,6 mA (2wires ver.)	> 1,6 mA (2wires ver.)	> 1,6 mA (2wires ver.)	> 1,6 mA (2wires ver.)
Residual Current	< 10 mA	< 10 mA	< 10 mA	< 10 mA
Voltage Drop	< 1,8V; < 6,5 V (2wires ver.)	< 1,8V; < 6,5 V (2wires ver.)	< 1,8V; < 6,5 V (2wires ver.)	< 1,8V; < 6,5 V (2wires ver.)
Operation Led	Yellow	Yellow	Yellow	Yellow
Switching Frequency	1000 Hz/200 Hz (2 wires NO-NC)	1000 Hz/200 Hz (2 wires NO-NC)	1000 Hz/200 Hz (2 wires NO-NC)	1000 Hz/200 Hz (2 wires NO-NC)
Start Up Delay	< 50 ms	< 50 ms	< 50 ms	< 50 ms
Repeatability	< 3%	< 3%	< 3%	< 3%
Short Circuit Protection	Present (self-resetting)	Present (self-resetting)	Present (self-resetting)	Present (self-resetting)
Electric Protection	Against polarity reversal inductive loads	Against polarity reversal inductive loads	Against polarity reversal inductive loads	Against polarity reversal inductive loads
Temperature Limit	(-25 ... +60 °C)	(-25 ... +60 °C)	(-25 ... +60 °C)	(-25 ... +60 °C)
Protection Degree	IP67	IP67	IP67	IP67
Cable Length	---	2 m	---	2 m
Cable Section	---	2 x 0,34 mm² 3 x 0,14 mm² 4 x 0,25 mm²	---	2 x 0,34 mm² 3 x 0,14 mm² 4 x 0,25 mm²
Housing Material	Nickel-plated brass	Nickel-plated brass	Nickel-plated brass	Nickel-plated brass
Active face	LCP	LCP	LCP	LCP
Tightening torque	* see page 5 of the Inductive Sensors Catalog	* see page 5 of the Inductive Sensors Catalog	* see page 5 of the Inductive Sensors Catalog	* see page 5 of the Inductive Sensors Catalog
Weight - Cable Output	---	145g	---	145g
Weight - Connector Output	95g	---	95g	---

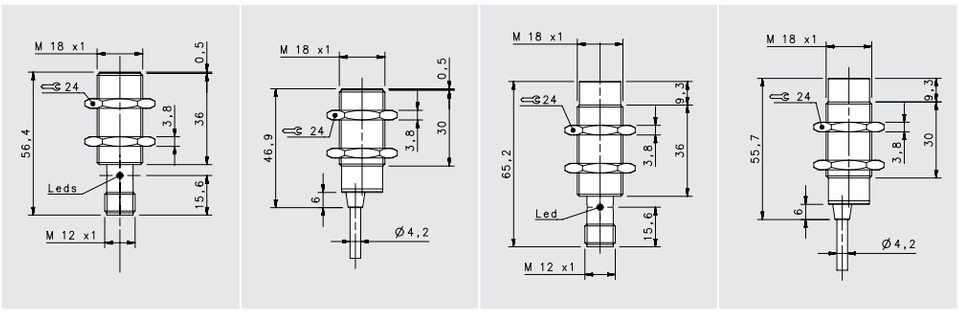

SHORT			
FLUSH		NON FLUSH	
M12 conn	cable	M12 conn	cable
5 mm	**5 mm**	**8 mm**	**8 mm**
---	---	---	---
---	---	---	---
IS-18-B1-S2	IS-18-B1-03	IS-18-D1-S2	IS-18-D1-03
95B062151	95B062141	95B062551	95B062541
IS-18-B2-S2	IS-18-B2-03	IS-18-D2-S2	IS-18-D2-03
95B062171	95B062161	95B062571	95B062561
IS-18-B3-S2	IS-18-B3-03	IS-18-D3-S2	IS-18-D3-03
95B062111	95B062101	95B062511	95B062501
IS-18-B4-S2	IS-18-B4-03	IS-18-D4-S2	IS-18-D4-03
95B062131	95B062121	95B062531	95B062521
---	---	---	---
---	---	---	---
---	---	---	---
---	---	---	---
---	---	---	---
---	---	---	---
---	---	---	---
---	---	---	---
---	---	---	---
---	---	---	---
---	---	---	---
---	---	---	---
---	---	---	---
---	---	---	---
---	---	---	---
---	---	---	---
---	---	---	---
---	---	---	---
10-30 Vdc (-15/10%)	10-30 Vdc (-15/10%)	10-30 Vdc (-15/10%)	10-30 Vdc (-15/10%)
< 10%	< 10%	< 10%	< 10%
< 10%	< 10%	< 10%	< 10%
200 mA	200 mA	200 mA	200 mA
---	---	---	---
< 10 mA	< 10 mA	< 10 mA	< 10 mA
< 1,8 V (I=100mA)	< 1,8 V (I=100mA)	< 1,8 V (I=100mA)	< 1,8 V (I=100mA)
Yellow	Yellow	Yellow	Yellow
1000 Hz	1000 Hz	1000 Hz	1000 Hz
< 50 ms	< 50 ms	< 50 ms	< 50 ms
< 3%	< 3%	< 3%	< 3%
Present (self-resetting)	Present (self-resetting)	Present (self-resetting)	Present (self-resetting)
Against polarity reversal inductive loads	Against polarity reversal inductive loads	Against polarity reversal inductive loads	Against polarity reversal inductive loads
(-25 ... +60 °C)	(-25 ... +60 °C)	(-25 ... +60 °C)	(-25 ... +60 °C)
IP67	IP67	IP67	IP67
---	2 m	---	2 m
---	3 x 0,14 mm²	---	3 x 0,14 mm²
Nickel-plated brass	Nickel-plated brass	Nickel-plated brass	Nickel-plated brass
LCP	LCP	LCP	LCP
* see page 5 of the Inductive Sensors Catalog	* see page 5 of the Inductive Sensors Catalog	* see page 5 of the Inductive Sensors Catalog	* see page 5 of the Inductive Sensors Catalog
---	145g	---	145g
95g	---	95g	---

2 wires NO or NC

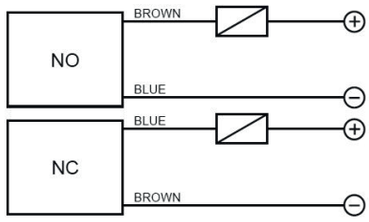

3 wires PNP or NPN

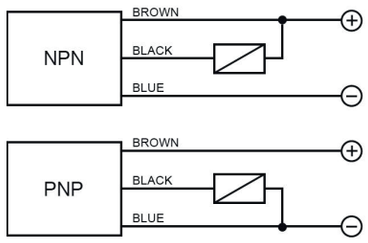

4 wires (PNP/NPN, NO/NC)

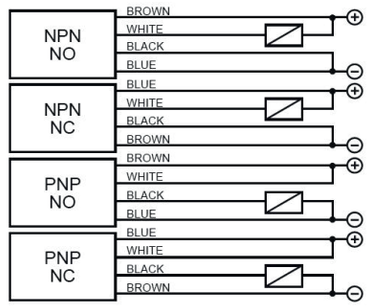

M12 connector - connections

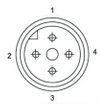

2 wires NO or NC

CONTACTS CONFIGURATION

Available	Contacts numbers			
	1	2	3	4
NO	+		–	
NC	–		+	

3 wires

CONTACTS CONFIGURATION

Available	Contacts numbers			
	1	2	3	4
(NO or NC)	+		–	NO/NC

4 wires (PNP/NPN, NO/NC)

CONTACTS CONFIGURATION

Output	Contacts numbers			
	1	2	3	4
NPN NO	+	NO	–	–
NPN NC	–	NC	+	–
PNP NO	+	+	–	NO
PNP NC	–	+	+	NC

BASIC M18

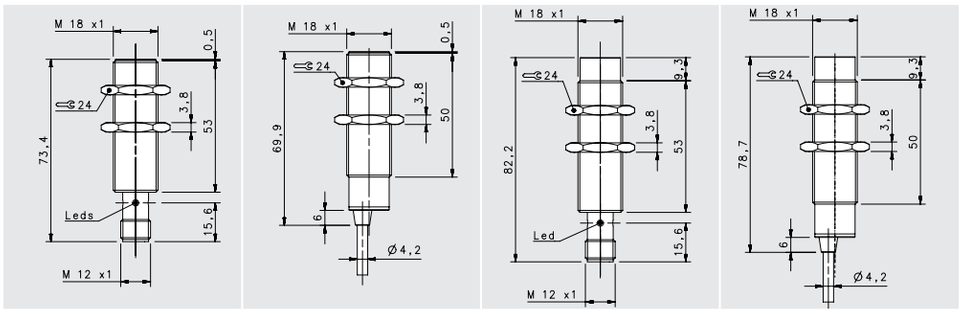

				STANDARD X2			
				FLUSH		NON FLUSH	
				M12 conn	cable	M12 conn	cable
NOMINAL SWITCHING DISTANCE				**8 mm**		**14 mm**	
10-30 Vdc	PNP/NPN NO-NC	4 wires	order No.	IS-18-E0-S2	IS-18-E0-03	IS-18-F0-S2	IS-18-F0-03
				95B067310	95B067270	95B067330	95B067290
10-30 Vdc	PNP NO	3 wires	order No.	IS-18-E1-S2	IS-18-E1-03	IS-18-F1-S2	IS-18-F1-03
				95B067050	95B067810	95B067040	95B067880
10-30 Vdc	PNP NC	3 wires	order No.	IS-18-E2-S2	IS-18-E2-03	IS-18-F2-S2	IS-18-F2-03
				95B067780	95B067820	95B067850	95B067890
10-30 Vdc	NPN NO	3 wires	order No.	IS-18-E3-S2	IS-18-E3-03	IS-18-F3-S2	IS-18-F3-03
				95B067790	95B067830	95B067860	95B067900
10-30 Vdc	NPN NC	3 wires	order No.	IS-18-E4-S2	IS-18-E4-03	IS-18-F4-S2	IS-18-F4-03
				95B067800	95B067840	95B067870	95B067910
10-30 Vdc	PNP NO-NC	4 wires	order No.	---	---	---	---
				---	---	---	---
10-30 Vdc	NPN NO-NC	4 wires	order No.	---	---	---	---
				---	---	---	---
10-30 Vdc	NO-NC	2 wires	order No.	IS-18-E9-S2	IS-18-E9-03	IS-18-F9-S2	IS-18-F9-03
				95B067320	95B067280	95B067340	95B067300
20-250 Vac/Vdc	NO	2 wires	order No.	---	---	---	---
				---	---	---	---
20-250 Vac/Vdc	NC	2 wires	order No.	---	---	---	---
				---	---	---	---
20-250 Vac	NO	2/3wires	order No.	---	---	---	---
				---	---	---	---
10-30 Vdc	Analog 0-20 mA	3 wires	order No.	---	---	---	---
				---	---	---	---
NAMUR amplifier	NAMUR	2 wires	order No.	---	---	---	---
				---	---	---	---

Nominal Voltage	10-30 Vdc (-15/10%)	10-30 Vdc (-15/10%)	10-30 Vdc (-15/10%)	10-30 Vdc (-15/10%)
Residual Ripple	< 10%	< 10%	< 10%	< 10%
Hysteresis	< 10%	< 10%	< 10%	< 10%
Max. Output Current	200 mA	200 mA	200 mA	200 mA
Min. Output Current	---	---	---	---
Residual Current	< 10 mA	< 10 mA	< 10 mA	< 10 mA
Voltage Drop	< 1,2 V (I=100mA)	< 1,2 V (I=100mA)	< 1,2 V (I=100mA)	< 1,2 V (I=100mA)
Operation Led	Yellow	Yellow	Yellow	Yellow
Switching Frequency	400 Hz	400 Hz	100 Hz	100 Hz
Start Up Delay	< 50 ms	< 50 ms	< 50 ms	< 50 ms
Repeatability	< 3%	< 3%	< 3%	< 3%
Short Circuit Protection	Present (self-resetting)	Present (self-resetting)	Present (self-resetting)	Present (self-resetting)
Electric Protection	Against polarity reversal inductive loads	Against polarity reversal inductive loads	Against polarity reversal inductive loads	Against polarity reversal inductive loads
Temperature Limit	(-25 ... +70 °C)	(-25 ... +70 °C)	(-25 ... +70 °C)	(-25 ... +70 °C)
Protection Degree	IP67	IP67	IP67	IP67
Cable Length	---	---	---	---
Cable Section	---	2 x 0,34 mm² 3 x 0,14 mm² 4 x 0,25 mm²	---	2 x 0,34 mm² 3 x 0,14 mm² 4 x 0,25 mm²
Housing Material	Nickel-plated brass	Nickel-plated brass	Nickel-plated brass	Nickel-plated brass
Active face	LCP	LCP	LCP	LCP
Tightening torque	* see page 5 of the Inductive Sensors Catalog	* see page 5 of the Inductive Sensors Catalog	* see page 5 of the Inductive Sensors Catalog	* see page 5 of the Inductive Sensors Catalog
Weight - Cable Output	---	---	145g	145g
Weight - Connector Output	95g	95g	---	---

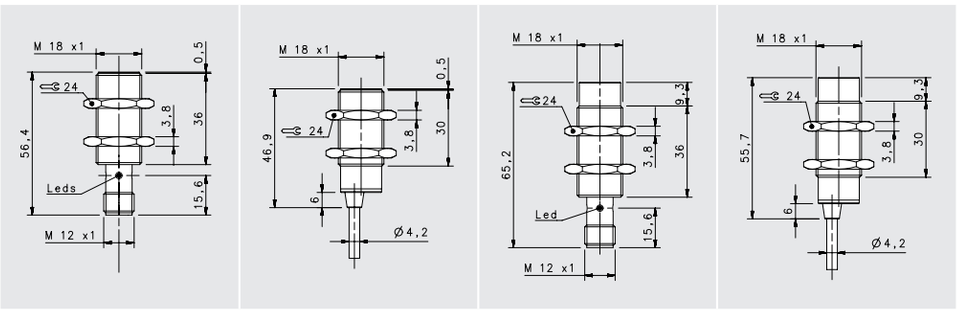

SHORT X2

FLUSH		NON FLUSH	
M12 conn	cable	M12 conn	cable
8 mm	**8 mm**	**14 mm**	**14 mm**
---	---	---	---
---	---	---	---
IS-18-G1-S2	IS-18-G1-03	IS-18-H1-S2	IS-18-H1-03
95B063531	95B063521	95B063611	95B063601
IS-18-G2-S2	IS-18-G2-03	IS-18-H2-S2	IS-18-H2-03
95B063551	95B063541	95B063631	95B063621
IS-18-G3-S2	IS-18-G3-03	IS-18-H3-S2	IS-18-H3-03
95B063491	95B063061	95B063571	95B063561
IS-18-G4-S2	IS-18-G4-03	IS-18-H4-S2	IS-18-H4-03
95B063511	95B063501	95B063591	95B063581
IS-18-G5-S2	IS-18-G5-03	IS-18-H5-S2	IS-18-H5-03
95B062731	95B062721	95B062811	95B064220
IS-18-G6-S2	IS-18-G6-03	IS-18-H6-S2	IS-18-H6-03
95B062711	95B064200	95B062791	95B064210
---	---	---	---
---	---	---	---
---	---	---	---
---	---	---	---
---	---	---	---
---	---	---	---
---	---	---	---
---	---	---	---
---	---	---	---
---	---	---	---
---	---	---	---
---	---	---	---
---	---	---	---
10-30 Vdc (-15/10%)	10-30 Vdc (-15/10%)	10-30 Vdc (-15/10%)	10-30 Vdc (-15/10%)
< 10%	< 10%	< 10%	< 10%
< 10%	< 10%	< 10%	< 10%
200 mA	200 mA	200 mA	200 mA
> 1,6 mA (2wires ver.)	> 1,6 mA (2wires ver.)	> 1,6 mA (2wires ver.)	> 1,6 mA (2wires ver.)
< 10 mA	< 10 mA	< 10 mA	< 10 mA
< 1,2 V (I=100mA)	< 1,2 V (I=100mA)	< 1,2 V (I=100mA)	< 1,2 V (I=100mA)
Yellow	Yellow	Yellow	Yellow
400 Hz/100 Hz (4 wires NO-NC)	400 Hz/100 Hz (4 wires NO-NC)	400 Hz/100 Hz (4 wires NO-NC)	400 Hz/100 Hz (4 wires NO-NC)
< 75 ms	< 75 ms	< 75 ms	< 75 ms
< 3%	< 3%	< 3%	< 3%
Present (self-resetting)	Present (self-resetting)	Present (self-resetting)	Present (self-resetting)
Against polarity reversal inductive loads	Against polarity reversal inductive loads	Against polarity reversal inductive loads	Against polarity reversal inductive loads
(-25 ... +60 °C)	(-25 ... +70 °C)	(-25 ... +60 °C)	(-25 ... +70 °C)
IP67	IP67	IP67	IP67
---	2 m	---	2 m
---	3 x 0,14 mm² 4 x 0,25 mm²	---	3 x 0,14 mm² 4 x 0,25 mm²
Nickel-plated brass	Nickel-plated brass	Nickel-plated brass	Nickel-plated brass
LCP	LCP	LCP	LCP
* see page 5 of the Inductive Sensors Catalog	* see page 5 of the Inductive Sensors Catalog	* see page 5 of the Inductive Sensors Catalog	* see page 5 of the Inductive Sensors Catalog
---	145g	---	145g
95g	---	95g	---

2 wires NO or NC

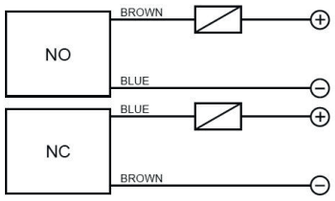

3 wires PNP or NPN

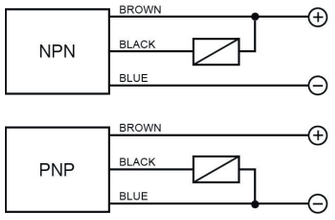

4 wires (PNP/NPN, NO/NC)

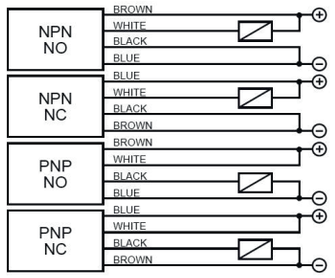

4 wires (NO+NC)

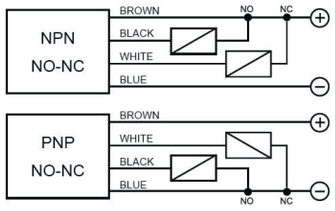

M12 connector *connections*

2 wires NO or NC

CONTACTS CONFIGURATION

Available	Contacts numbers			
	1	2	3	4
NO	+		–	
NC	–		+	

3 wires

CONTACTS CONFIGURATION

Available	Contacts numbers			
	1	2	3	4
(NO or NC)	+		–	NO/NC

4 wires (PNP/NPN, NO/NC)

CONTACTS CONFIGURATION

Output	Contacts numbers			
	1	2	3	4
NPN NO	+	NO	–	–
NPN NC	–	NC	+	–
PNP NO	+	+	–	NO
PNP NC	–	+	+	NC

4 wires (NO+NC)

Available	Contacts numbers			
	1	2	3	4
(NO + NC)	+	NC	–	NO

BASIC M30

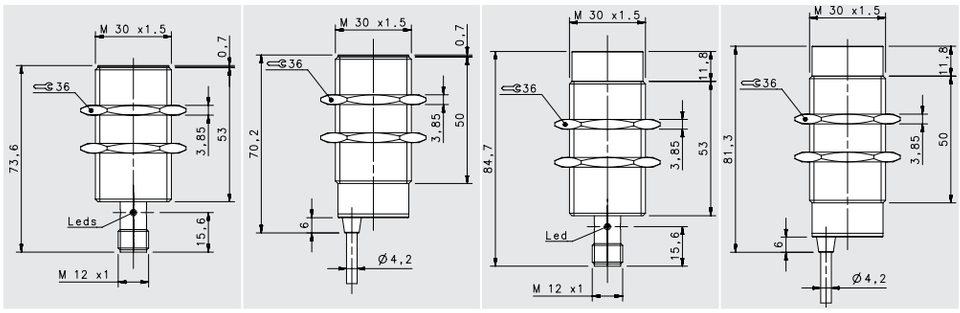

				STANDARD			
				FLUSH		NON FLUSH	
				M12 conn	cable	M12 conn	cable
NOMINAL SWITCHING DISTANCE				**10 mm**	**10 mm**	**15 mm**	**15 mm**
10-30 Vdc	PNP/NPN NO-NC	4 wires	order No.	IS-30-A0-S2	IS-30-A0-03	IS-30-C0-S2	IS-30-C0-03
				95B064490	95B064460	95B064510	95B064470
10-30 Vdc	PNP NO	3 wires	order No.	IS-30-A1-S2	IS-30-A1-03	IS-30-C1-S2	IS-30-C1-03
				95B061431	95B061421	95B061831	95B061821
10-30 Vdc	PNP NC	3 wires	order No.	IS-30-A2-S2	IS-30-A2-03	IS-30-C2-S2	IS-30-C2-03
				95B061451	95B061441	95B061851	95B061841
10-30 Vdc	NPN NO	3 wires	order No.	IS-30-A3-S2	IS-30-A3-03	IS-30-C3-S2	IS-30-C3-03
				95B061391	95B061381	95B061791	95B061781
10-30 Vdc	NPN NC	3 wires	order No.	IS-30-A4-S2	IS-30-A4-03	IS-30-C4-S2	IS-30-C4-03
				95B061411	95B061401	95B061811	95B061801
10-30 Vdc	PNP NO-NC	4 wires	order No.	---	---	---	---
				---	---	---	---
10-30 Vdc	NPN NO-NC	4 wires	order No.	---	---	---	---
				---	---	---	---
10-30 Vdc	NO-NC	2 wires	order No.	IS-30-A9-S2	IS-30-A9-03	IS-30-C9-S2	IS-30-C9-03
				95B064570	95B064530	95B064590	95B064550
20-250 Vac/Vdc	NO	2 wires	order No.	---	---	---	---
				---	---	---	---
20-250 Vac/Vdc	NC	2 wires	order No.	---	---	---	---
				---	---	---	---
20-250 Vac	NO	2/3wires	order No.	---	---	---	---
				---	---	---	---
10-30 Vdc	Analog 0-20 mA	3 wires	order No.	---	---	---	---
				---	---	---	---
NAMUR amplifier	NAMUR	2 wires	order No.	---	---	---	---
				---	---	---	---

Nominal Voltage	10-30 Vdc (-15/10%)	10-30 Vdc (-15/10%)	10-30 Vdc (-15/10%)	10-30 Vdc (-15/10%)
Residual Ripple	< 10%	< 10%	< 10%	< 10%
Hysteresis	< 10%	< 10%	< 10%	< 10%
Max. Output Current	200mA; 100 mA (2wires)	200mA; 100 mA (2wires)	200mA; 100 mA (2wires)	200mA; 100 mA (2wires)
Min. Output Current	> 1,6 mA (2wires)	> 1,6 mA (2wires)	> 1,6 mA (2wires)	> 1,6 mA (2wires)
Residual Current	< 1,6 mA	< 1,6 mA	< 1,6 mA	< 1,6 mA
Voltage Drop	< 1,8V; < 6,5 V (2wires)	< 1,8V; < 6,5 V (2wires)	< 1,8V; < 6,5 V (2wires)	< 1,8V; < 6,5 V (2wires)
Operation Led	Yellow	Yellow	Yellow	Yellow
Switching Frequency	300 Hz/250 Hz (2 wires NO-NC)	300 Hz/250 Hz (2 wires NO-NC)	300 Hz/250 Hz (2 wires NO-NC)	300 Hz/250 Hz (2 wires NO-NC)
Start Up Delay	< 50 ms	< 50 ms	< 50 ms	< 50 ms
Repeatability	< 3%	< 3%	< 3%	< 3%
Short Circuit Protection	Present (self-resetting)	Present (self-resetting)	Present (self-resetting)	Present (self-resetting)
Electric Protection	Against polarity reversal inductive loads	Against polarity reversal inductive loads	Against polarity reversal inductive loads	Against polarity reversal inductive loads
Temperature Limit	(-25 ... +70 °C)	(-25 ... +70 °C)	(-25 ... +70 °C)	(-25 ... +70 °C)
Protection Degree	IP67	IP67	IP67	IP67
Cable Length	---	2 m	---	2 m
Cable Section	---	2 x 0,34 mm² 3 x 0,14 mm² 4 x 0,25 mm²	---	2 x 0,34 mm² 3 x 0,14 mm² 4 x 0,25 mm²
Housing Material	Nickel-plated brass	Nickel-plated brass	Nickel-plated brass	Nickel-plated brass
Active face	LCP	LCP	LCP	LCP
Tightening torque	* see page 5 of the Inductive Sensors Catalog	* see page 5 of the Inductive Sensors Catalog	* see page 5 of the Inductive Sensors Catalog	* see page 5 of the Inductive Sensors Catalog
Weight - Cable Output	---	210 g	---	210 g
Weight - Connector Output	170 g	---	170 g	---

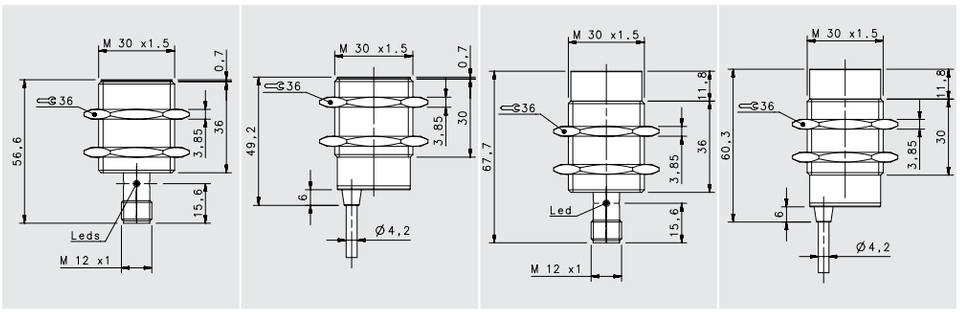

SHORT

FLUSH		NON FLUSH	
M12 conn	cable	M12 conn	cable
10 mm	**10 mm**	**15 mm**	**15 mm**
---	---	---	---
---	---	---	---
IS-30-B1-S2	IS-30-B1-03	IS-30-D1-S2	IS-30-D1-03
95B062231	95B062221	95B062631	95B062621
IS-30-B2-S2	IS-30-B2-03	IS-30-D2-S2	IS-30-D2-03
95B062251	95B062241	95B062651	95B062641
IS-30-B3-S2	IS-30-B3-03	IS-30-D3-S2	IS-30-D3-03
95B062191	95B062181	95B062591	95B062581
IS-30-B4-S2	IS-30-B4-03	IS-30-D4-S2	IS-30-D4-03
95B062211	95B062201	95B062611	95B062601
---	---	---	---
---	---	---	---
---	---	---	---
---	---	---	---
---	---	---	---
---	---	---	---
---	---	---	---
---	---	---	---
---	---	---	---
---	---	---	---
---	---	---	---
---	---	---	---
---	---	---	---
---	---	---	---
---	---	---	---
---	---	---	---
---	---	---	---
---	---	---	---
10-30 Vdc (-15/10%)	10-30 Vdc (-15/10%)	10-30 Vdc (-15/10%)	10-30 Vdc (-15/10%)
< 10%	< 10%	< 10%	< 10%
< 10%	< 10%	< 10%	< 10%
200 mA	200 mA	200 mA	200 mA
---	---	---	---
< 10 mA	< 10 mA	< 10 mA	< 10 mA
< 1,8 V (I=100mA)	< 1,8 V (I=100mA)	< 1,8 V (I=100mA)	< 1,8 V (I=100mA)
Yellow	Yellow	Yellow	Yellow
300 Hz	300 Hz	300 Hz	300 Hz
< 50 ms	< 50 ms	< 50 ms	< 50 ms
< 3%	< 3%	< 3%	< 3%
Present (self-resetting)	Present (self-resetting)	Present (self-resetting)	Present (self-resetting)
Against polarity reversal inductive loads	Against polarity reversal inductive loads	Against polarity reversal inductive loads	Against polarity reversal inductive loads
(-25 ... +60 °C)	(-25 ... +60 °C)	(-25 ... +60 °C)	(-25 ... +60 °C)
IP67	IP67	IP67	IP67
---	2 m	---	2 m
---	3 x 0,14 mm²	---	3 x 0,14 mm²
Nickel-plated brass	Nickel-plated brass	Nickel-plated brass	Nickel-plated brass
LCP	LCP	LCP	LCP
* see page 5 of the Inductive Sensors Catalog	* see page 5 of the Inductive Sensors Catalog	* see page 5 of the Inductive Sensors Catalog	* see page 5 of the Inductive Sensors Catalog
---	210 g	---	210 g
170 g	---	170 g	---

2 wires NO or NC

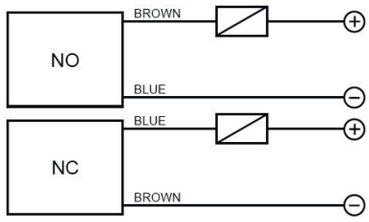

3 wires PNP or NPN

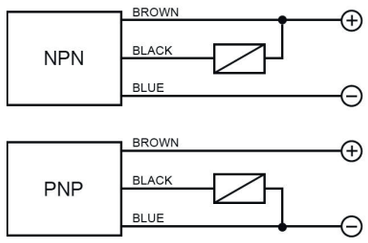

4 wires (PNP/NPN, NO/NC)

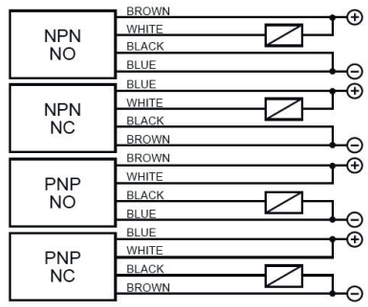

M12 connector - connections

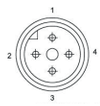

2 wires NO or NC

CONTACTS CONFIGURATION

Available	Contacts numbers			
	1	2	3	4
NO	+		–	
NC	–		+	

3 wires

CONTACTS CONFIGURATION

Available	Contacts numbers			
	1	2	3	4
(NO or NC)	+		–	NO/NC

4 wires (PNP/NPN, NO/NC)

CONTACTS CONFIGURATION

Output	Contacts numbers			
	1	2	3	4
NPN NO	+	NO	–	–
NPN NC	–	NC	+	–
PNP NO	+	+	–	NO
PNP NC	–	+	+	NC

BASIC M30

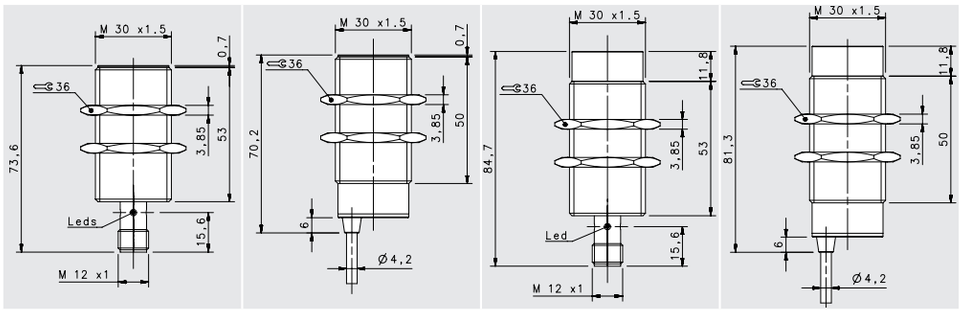

STANDARD X2

				FLUSH		NON-FLUSH	
				M12 conn	cable	M12 conn	cable
NOMINAL SWITCHING DISTANCE				**15mm**	**15mm**	**20 mm**	**20 mm**
10-30 Vdc	PNP/NPN NO-NC	4 wires	order No.	IS-30-E0-S2	IS-30-E0-03	IS-30-F0-S2	IS-30-F0-03
				95B067390	95B067350	95B067410	95B067370
10-30 Vdc	PNP NO	3 wires	order No.	IS-30-E1-S2	IS-30-E1-03	IS-30-F1-S2	IS-30-F1-03
				95B067060	95B067950	95B067990	95B068030
10-30 Vdc	PNP NC	3 wires	order No.	IS-30-E2-S2	IS-30-E2-03	IS-30-F2-S2	IS-30-F2-03
				95B067920	95B067960	95B068000	95B068040
10-30 Vdc	NPN NO	3 wires	order No.	IS-30-E3-S2	IS-30-E3-03	IS-30-F3-S2	IS-30-F3-03
				95B067930	95B067970	95B068010	95B068050
10-30 Vdc	NPN NC	3 wires	order No.	IS-30-E4-S2	IS-30-E4-03	IS-30-F4-S2	IS-30-F4-03
				95B067940	95B067980	95B068020	95B068060
10-30 Vdc	PNP NO-NC	4 wires	order No.	---	---	---	---
				---	---	---	---
10-30 Vdc	NPN NO-NC	4 wires	order No.	---	---	---	---
				---	---	---	---
10-30 Vdc	NO-NC	2 wires	order No.	IS-30-E9-S2	IS-30-E9-03	IS-30-F9-S2	IS-30-F9-03
				95B067400	95B067360	95B067420	95B067380
20-250 Vac/Vdc	NO	2 wires	order No.	---	---	---	---
				---	---	---	---
20-250 Vac/Vdc	NC	2 wires	order No.	---	---	---	---
				---	---	---	---
20-250 Vac	NO	2/3wires	order No.	---	---	---	---
				---	---	---	---
10-30 Vdc	Analog 0-20 mA	3 wires	order No.	---	---	---	---
				---	---	---	---
NAMUR amplifier	NAMUR	2 wires	order No.	---	---	---	---
				---	---	---	---

Nominal Voltage	10-30 Vdc (-15/10%)	10-30 Vdc (-15/10%)	10-30 Vdc (-15/10%)	10-30 Vdc (-15/10%)
Residual Ripple	< 10%	< 10%	< 10%	< 10%
Hysteresis	< 10%	< 10%	< 10%	< 10%
Max. Output Current	200 mA	200 mA	200 mA	200 mA
Min. Output Current	---	---	---	---
Residual Current	< 10 mA	< 10 mA	< 10 mA	< 10 mA
Voltage Drop	< 6,5 V (I=100mA)	< 6,5 V (I=100mA)	< 6,5 V (I=100mA)	< 6,5 V (I=100mA)
Operation Led	Yellow	Yellow	Yellow	Yellow
Switching Frequency	200 Hz/100 Hz (2 wires NO-NC)	200 Hz/100 Hz (2 wires NO-NC)	200 Hz/100 Hz (2 wires NO-NC)	200 Hz/100 Hz (2 wires NO-NC)
Start Up Delay	< 75 ms	< 75 ms	< 75 ms	< 75 ms
Repeatability	< 3%	< 3%	< 3%	< 3%
Short Circuit Protection	Present (self-resetting)	Present (self-resetting)	Present (self-resetting)	Present (self-resetting)
Electric Protection	Against polarity reversal inductive loads	Against polarity reversal inductive loads	Against polarity reversal inductive loads	Against polarity reversal inductive loads
Temperature Limit	(-25 ... +70 °C)	(-25 ... +70 °C)	(-25 ... +70 °C)	(-25 ... +70 °C)
Protection Degree	IP67	IP67	IP67	IP67
Cable Length	---	---	---	---
Cable Section	---	2 x 0,34 mm² 3 x 0,14 mm² 4 x 0,25 mm²	---	2 x 0,34 mm² 3 x 0,14 mm² 4 x 0,25 mm²
Housing Material	Nickel-plated brass	Nickel-plated brass	Nickel-plated brass	Nickel-plated brass
Active face	LCP	LCP	LCP	LCP
Tightening torque	* see page 5 of the Inductive Sensors Catalog	* see page 5 of the Inductive Sensors Catalog	* see page 5 of the Inductive Sensors Catalog	* see page 5 of the Inductive Sensors Catalog
Weight - Cable Output	---	---	---	---
Weight - Connector Output	170 g	170 g	170 g	170 g

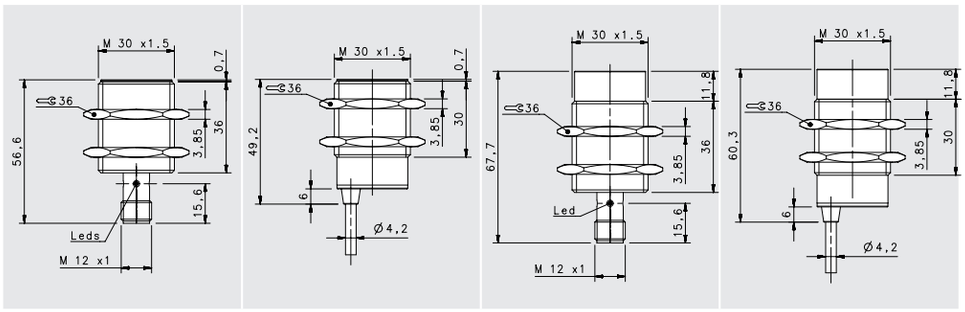

SHORT X2

FLUSH		NON FLUSH	
M12 conn	cable	M12 conn	cable
15mm	**15mm**	**20 mm**	**20 mm**
---	---	---	---
---	---	---	---
IS-30-G1-S2	IS-30-G1-03	IS-30-H1-S2	IS-30-H1-03
95B063691	95B063681	95B063771	95B063761
IS-30-G2-S2	IS-30-G2-03	IS-30-H2-S2	IS-30-H2-03
95B063711	95B063701	95B063791	95B063781
IS-30-G3-S2	IS-30-G3-03	IS-30-H3-S2	IS-30-H3-03
95B063651	95B063641	95B063731	95B063721
IS-30-G4-S2	IS-30-G4-03	IS-30-H4-S2	IS-30-H4-03
95B063671	95B063661	95B063751	95B063741
IS-30-G5-S2	IS-30-G5-03	IS-30-H5-S2	IS-30-H5-03
95B063831	95B063821	95B064450	95B064420
IS-30-G6-S2	IS-30-G6-03	IS-30-H6-S2	IS-30-H6-03
95B064430	95B064400	95B064440	95B064410
---	---	---	---
---	---	---	---
---	---	---	---
---	---	---	---
---	---	---	---
---	---	---	---
---	---	---	---
---	---	---	---
---	---	---	---
---	---	---	---
---	---	---	---
---	---	---	---
---	---	---	---
---	---	---	---
10-30 Vdc (-15/10%)	10-30 Vdc (-15/10%)	10-30 Vdc (-15/10%)	10-30 Vdc (-15/10%)
< 10%	< 10%	< 10%	< 10%
< 10%	< 10%	< 10%	< 10%
200 mA	200 mA	200 mA	200 mA
---	---	---	---
< 10 mA	< 10 mA	< 10 mA	< 10 mA
< 1,2 V (I=100mA)	< 1,2 V (I=100mA)	< 1,2 V (I=100mA)	< 1,2 V (I=100mA)
Yellow	Yellow	Yellow	Yellow
200 Hz	200 Hz	200 Hz	200 Hz
< 75 ms	< 75 ms	< 75 ms	< 75 ms
< 3%	< 3%	< 3%	< 3%
Present (self-resetting)	Present (self-resetting)	Present (self-resetting)	Present (self-resetting)
Against polarity reversal inductive loads	Against polarity reversal inductive loads	Against polarity reversal inductive loads	Against polarity reversal inductive loads
(-25 ... +70 °C)	(-25 ... +70 °C)	(-25 ... +70 °C)	(-25 ... +70 °C)
IP67	IP67	IP67	IP67
---	2 m	---	2 m
---	3 x 0,14 mm² 4 x 0,25 mm²	---	3 x 0,14 mm² 4 x 0,25 mm²
Nickel-plated brass	Nickel-plated brass	Nickel-plated brass	Nickel-plated brass
LCP	LCP	LCP	LCP
* see page 5 of the Inductive Sensors Catalog	* see page 5 of the Inductive Sensors Catalog	* see page 5 of the Inductive Sensors Catalog	* see page 5 of the Inductive Sensors Catalog
---	210 g	---	210 g
170 g	---	170 g	---

2 wires NO or NC

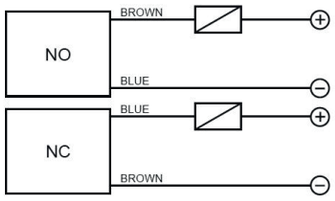

3 wires PNP or NPN

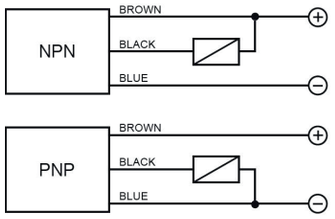

4 wires (PNP/NPN, NO/NC)

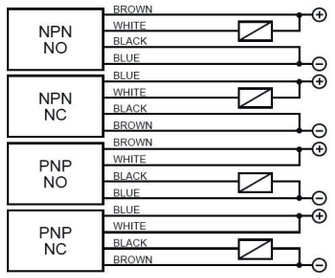

4 wires (NO+NC)

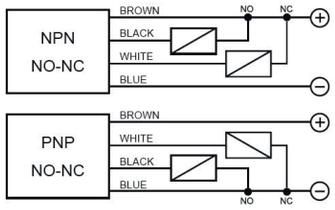

M12 connector *connections*

2 wires NO or NC

CONTACTS CONFIGURATION

Available	Contacts numbers			
	1	2	3	4
NO	+		–	
NC	–		+	

3 wires

CONTACTS CONFIGURATION

Available	Contacts numbers			
	1	2	3	4
(NO or NC)	+		–	NO/NC

4 wires (PNP/NPN, NO/NC)

CONTACTS CONFIGURATION

Output	Contacts numbers			
	1	2	3	4
NPN NO	+	NO	–	–
NPN NC	–	NC	+	–
PNP NO	+	+	–	NO
PNP NC	–	+	+	NC

4 wires (NO+NC)

Available	Contacts numbers			
	1	2	3	4
(NO + NC)	+	NC	–	NO

STAINLESS STEEL

Stainless Steel housing
M4, M5 POM active face - M6,5, M8, M12, M18, M30 LCP active face
Standard length
Short length
Normal and double range operating distance
Operating distance 0.8 ... 20 mm
M4, M5, M6,5, M8, M12, M18, M30
Cable, M8 or M12 connector
3 wires
PNP, NPN, NO, NC
IP69K protection

REDUCTION FACTOR

	ALUMINUM (25°C)	STAINLESS STEEL AISI316L	COPPER	BRASS
FLUSH	0,3...0,5	0,7...0,9	0,2...0,5	0,4...0,6
NON-FLUSH	0,4...0,6	0,7...1,05	0,4...0,5	0,5...0,7

˝M12/18/30 models are Diversey and ECOLAB tested˝

*Excluded M4 and M5 models

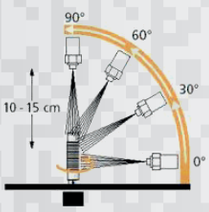

IP69K

Each Stainless Steel model is IP69K tested
M12/18/30 models are IP69K certified

STAINLESS STEEL

STAINLESS STEEL M4

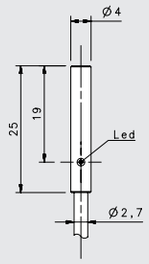

STANDARD

FLUSH

cable

NOMINAL SWITCHING DISTANCE **0,8 mm**

10-30 Vdc	PNP/NPN NO-NC	4 wires	order No.	---

10-30 Vdc	PNP NO	3 wires	order No.	IS-04-A1-03
				95B061011
10-30 Vdc	PNP NC	3 wires	order No.	---

10-30 Vdc	NPN NO	3 wires	order No.	IS-04-A3-03
				95B061001
10-30 Vdc	NPN NC	3 wires	order No.	---

10-30 Vdc	PNP NO-NC	4 wires	order No.	---

10-30 Vdc	NPN NO-NC	4 wires	order No.	---

10-30 Vdc	NO-NC	2 wires	order No.	---

20-250 Vac/Vdc	NO	2 wires	order No.	---

20-250 Vac/Vdc	NC	2 wires	order No.	---

20-250 Vac	NO	2/3wires	order No.	---

10-30 Vdc	Analog 0-20 mA	3 wires	order No.	---

NAMUR amplifier	NAMUR	2 wires	order No.	---

Nominal Voltage	10-30 Vdc (-15/10%)
Residual Ripple	< 10%
Hysteresis	< 15%
Max. Output Current	100 mA
Min. Output Current	---
Residual Current	< 0,01 mA
Voltage Drop	< 1,5 V
Operation Led	Yellow
Switching Frequency	2000 Hz
Start Up Delay	---
Repeatability	< 1%
Short Circuit Protection	Present (self-resetting)
Electric Protection	Against polarity reversal inductive loads
Temperature Limit	(-25 ... +70 °C)
Protection Degree	IP69K
Cable Length	2 m (PUR)
Cable Section	3x 0,15 mm²
Housing Material	Stainless-Steel
Active face	POM
Tightening torque	---
Weight - Cable Output	50 g
Weight - Connector Output	---

3 wires PNP or NPN

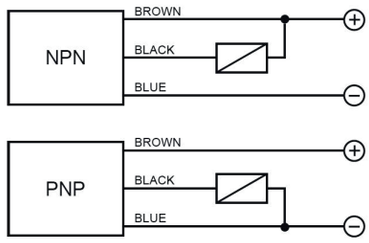

M8 3 pole

CONTACTS CONFIGURATION

Available	Contacts numbers		
	1 BROWN	3 BLUE	4 BLACK
NPN/PNP	+	–	NO/NC

STAINLESS STEEL M5

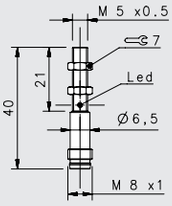

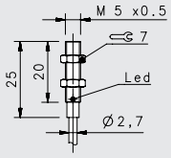

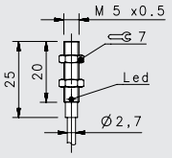

				STANDARD		STANDARD X2
				FLUSH		FLUSH
				M8 conn	cable	cable
NOMINAL SWITCHING DISTANCE				**0,8 mm**	**0,8 mm**	**1,5 mm**
10-30 Vdc	PNP/NPN NO-NC	4 wires	order No.	---	---	---
				---	---	---
10-30 Vdc	PNP NO	3 wires	order No.	IS-05-A1-S1	IS-05-A1-03	---
				95B061051	95B061041	---
10-30 Vdc	PNP NC	3 wires	order No.	---	---	---
				---	---	---
10-30 Vdc	NPN NO	3 wires	order No.	IS-05-A3-S1	IS-05-A3-03	IS-05-E3-03
				95B061031	95B061021	95B065400
10-30 Vdc	NPN NC	3 wires	order No.		IS-05-A4-03	---
					95B065420	---
10-30 Vdc	PNP NO-NC	4 wires	order No.	---	---	---
				---	---	---
10-30 Vdc	NPN NO-NC	4 wires	order No.	---	---	---
				---	---	---
10-30 Vdc	NO-NC	2 wires	order No.	---	---	---
				---	---	---
20-250 Vac/Vdc	NO	2 wires	order No.	---	---	---
				---	---	---
20-250 Vac/Vdc	NC	2 wires	order No.	---	---	---
				---	---	---
20-250 Vac	NO	2/3 wires	order No.	---	---	---
				---	---	---
10-30 Vdc	Analog 0-20 mA	3 wires	order No.	---	---	---
				---	---	---
NAMUR amplifier	NAMUR	2 wires	order No.	---	---	---
				---	---	---

Nominal Voltage	10-30 Vdc (-15/10%)	10-30 Vdc (-15/10%)	10-30 Vdc (-15/10%)
Residual Ripple	< 10%	< 10%	< 10%
Hysteresis	< 15%	< 15%	< 15%
Max. Output Current	100 mA	100 mA	100 mA
Min. Output Current	---	---	---
Residual Current	< 0,01 mA	< 0,01 mA	< 0,01 mA
Voltage Drop	< 1,5V	< 1,5V	< 1,5V
Operation Led	Yellow	Yellow	Yellow
Switching Frequency	2000 Hz	2000 Hz	2000 Hz
Start Up Delay	---	---	---
Repeatability	< 1%	< 1%	---
Short Circuit Protection	Present (self-resetting)	Present (self-resetting)	Present (self-resetting)
Electric Protection	Against polarity reversal inductive loads	Against polarity reversal inductive loads	Against polarity reversal inductive loads
Temperature Limit	(-25 ... +70 °C)	(-25 ... +70 °C)	(-25 ... +70 °C)
Protection Degree	IP69K	IP69K	IP69K
Cable Length	---	2 m (PUR)	2 m (PUR)
Cable Section	---	3x 0,15 mm²	3x 0,15 mm²
Housing Material	Stainless-Steel	Stainless-Steel	Stainless-Steel
Active face	POM	POM	POM
Tightening torque	1,5 Nm	1,5 Nm	1,5 Nm
Weight - Cable Output	---	25g	25g
Weight - Connector Output	14g	---	---

STAINLESS STEEL M6,5

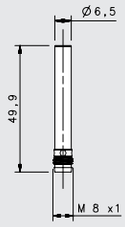

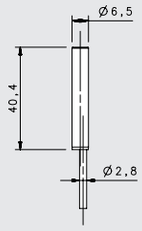

SHORT STAINLESS STEEL

FLUSH

				M8 conn	cable
NOMINAL SWITCHING DISTANCE				**1,5 mm**	**1,5 mm**
10-30 Vdc	PNP/NPN NO-NC	4 wires	order No.	---	---
				---	---
10-30 Vdc	PNP NO	3 wires	order No.	IS-65-M1-S1	IS-65-M1-03
				95B066080	95B064760
10-30 Vdc	PNP NC	3 wires	order No.	IS-65-M2-S1	IS-65-M2-03
				95B066120	95B064800
10-30 Vdc	NPN NO	3 wires	order No.	IS-65-M3-S1	IS-65-M3-03
				95B066000	95B064680
10-30 Vdc	NPN NC	3 wires	order No.	IS-65-M4-S1	IS-65-M4-03
				95B066040	95B064720
10-30 Vdc	PNP NO-NC	4 wires	order No.	---	---
				---	---
10-30 Vdc	NPN NO-NC	4 wires	order No.	---	---
				---	---
10-30 Vdc	NO-NC	2 wires	order No.	---	---
				---	---
20-250 Vac/Vdc	NO	2 wires	order No.	---	---
				---	---
20-250 Vac/Vdc	NC	2 wires	order No.	---	---
				---	---
20-250 Vac	NO	2/3wires	order No.	---	---
				---	---
10-30 Vdc	Analog 0-20 mA	3 wires	order No.	---	---
				---	---
NAMUR amplifier	NAMUR	2 wires	order No.	---	---
				---	---

Nominal Voltage	10-30 Vdc (-15/10%)	10-30 Vdc (-15/10%)
Residual Ripple	< 10%	< 10%
Hysteresis	< 10%	< 10%
Max. Output Current	200 mA	200 mA
Min. Output Current	---	---
Residual Current	< 10 mA	< 10 mA
Voltage Drop	< 1,2 V (I=100mA)	< 1,2 V (I=100mA)
Operation Led	Yellow	Yellow
Switching Frequency	1000 Hz	1000 Hz
Start Up Delay	< 50 ms	< 50 ms
Repeatability	< 3%	< 3%
Short Circuit Protection	Present (self-resetting)	Present (self-resetting)
Electric Protection	Against polarity reversal inductive loads	Against polarity reversal inductive loads
Temperature Limit	(-25 ... +70 °C)	(-25 ... +70 °C)
Protection Degree	IP69K	IP69K
Cable Length	---	---
Cable Section	---	3x 0,14 mm²
Housing Material	Stainless-Steel	Stainless-Steel
Active face	LCP	LCP
Tightening torque	---	---
Weight - Cable Output	---	80 g
Weight - Connector Output	40 g	---

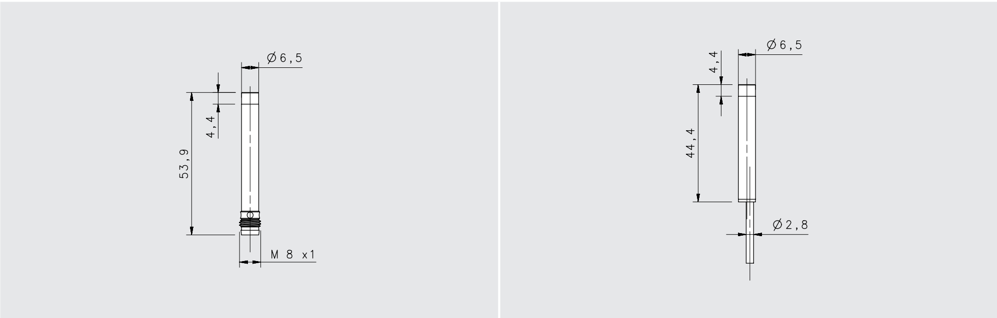

SHORT STAINLESS STEEL

NON FLUSH

M8 conn	cable
2 mm	**2 mm**
---	---
---	---
IS-65-N1-S1	IS-65-N1-03
95B066240	95B064920
IS-65-N2-S1	IS-65-N2-03
95B066280	95B064960
IS-65-N3-S1	IS-65-N3-03
95B066160	95B064840
IS-65-N4-S1	IS-65-N4-03
95B066200	95B064880
---	---
---	---
---	---
---	---
---	---
---	---
---	---
---	---
---	---
---	---
---	---
---	---
---	---
---	---
---	---
---	---
10-30 Vdc (-15/10%)	10-30 Vdc (-15/10%)
< 10%	< 10%
< 10%	< 10%
200 mA	200 mA
---	---
< 10 mA	< 10 mA
< 1,2 V (I=100mA)	< 1,2 V (I=100mA)
Yellow	Yellow
1000 Hz	1000 Hz
< 50 ms	< 50 ms
< 3%	< 3%
Present (self-resetting)	Present (self-resetting)
Against polarity reversal inductive loads	Against polarity reversal inductive loads
(-25 ... +70 °C)	(-25 ... +70 °C)
IP69K	IP69K
---	---
---	3x 0,14 mm²
Stainless-Steel	Stainless-Steel
LCP	LCP
---	---
---	80 g
40 g	---

3 wires PNP or NPN

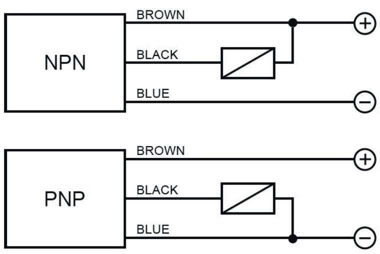

M8 3 pole

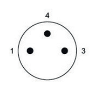

CONTACTS CONFIGURATION

Available	Contacts numbers		
	1 BROWN	3 BLUE	4 BLACK
NPN/PNP	+	–	NO/NC

STAINLESS STEEL M8

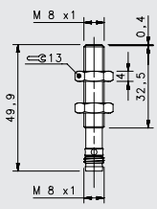

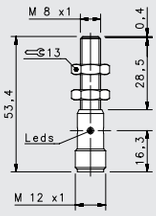

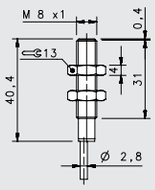

SHORT STAINLESS STEEL

FLUSH

				M8 conn	M12 conn	cable
NOMINAL SWITCHING DISTANCE				**1,5 mm**	**1,5 mm**	**1,5 mm**
10-30 Vdc	PNP/NPN NO-NC	4 wires		---	---	---
			order No.	---	---	---
10-30 Vdc	PNP NO	3 wires		IS-08-M1-S1	IS-08-M1-S2	IS-08-M1-03
			order No.	95B066870	95B066600	95B066380
10-30 Vdc	PNP NC	3 wires		IS-08-M2-S1	IS-08-M2-S2	IS-08-M2-03
			order No.	95B066900	95B066630	95B066600
10-30 Vdc	NPN NO	3 wires		IS-08-M3-S1	IS-08-M3-S2	IS-08-M3-03
			order No.	95B066820	95B066540	95B066340
10-30 Vdc	NPN NC	3 wires		IS-08-M4-S1	IS-08-M4-S2	IS-08-M4-03
			order No.	95B066840	95B066570	95B066360
10-30 Vdc	PNP NO-NC	4 wires		---	---	---
			order No.	---	---	---
10-30 Vdc	NPN NO-NC	4 wires		---	---	---
			order No.	---	---	---
10-30 Vdc	NO-NC	2 wires		---	---	---
			order No.	---	---	---
20-250 Vac/Vdc	NO	2 wires		---	---	---
			order No.	---	---	---
20-250 Vac/Vdc	NC	2 wires		---	---	---
			order No.	---	---	---
20-250 Vac	NO	2/3 wires		---	---	---
			order No.	---	---	---
10-30 Vdc	Analog 0-20 mA	3 wires		---	---	---
			order No.	---	---	---
NAMUR amplifier	NAMUR	2 wires		---	---	---
			order No.	---	---	---

Nominal Voltage	10-30 Vdc (-15/10%)	10-30 Vdc (-15/10%)	10-30 Vdc (-15/10%)
Residual Ripple	< 10%	< 10%	< 10%
Hysteresis	< 10%	< 10%	< 10%
Max. Output Current	200 mA	200 mA	200 mA
Min. Output Current	---	---	---
Residual Current	< 10 mA	< 10 mA	< 10 mA
Voltage Drop	< 1,2 V (I=100mA)	< 1,2 V (I=100mA)	< 1,2 V (I=100mA)
Operation Led	Yellow	Yellow	Yellow
Switching Frequency	1000 Hz	1000 Hz	1000 Hz
Start Up Delay	< 50 ms	< 50 ms	< 50 ms
Repeatability	< 3%	< 3%	< 3%
Short Circuit Protection	Present (self-resetting)	Present (self-resetting)	Present (self-resetting)
Electric Protection	Against polarity reversal inductive loads	Against polarity reversal inductive loads	Against polarity reversal inductive loads
Temperature Limit	(-25 ... +70 °C)	(-25 ... +70 °C)	(-25 ... +70 °C)
Protection Degree	IP69K	IP69K	IP69K
Cable Length	---	---	---
Cable Section	---	---	3x 0,14 mm²
Housing Material	Stainless-Steel	Stainless-Steel	Stainless-Steel
Active face	LCP	LCP	LCP
Tightening torque	* see page 5 of the Inductive Sensors Catalog	* see page 5 of the Inductive Sensors Catalog	* see page 5 of the Inductive Sensors Catalog
Weight - Cable Output	---	---	80 g
Weight - Connector Output	35g	55g	---

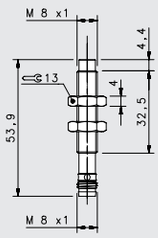

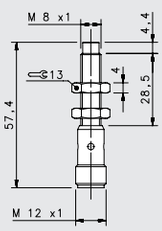

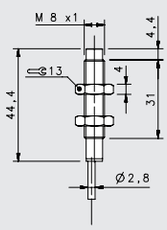

SHORT STAINLESS STEEL

NON FLUSH

M8 conn	M12 conn	cable
2 mm	**2 mm**	**2 mm**
---	---	---
---	---	---
IS-08-N1-S1	IS-08-N1-S2	IS-08-N1-03
95B066980	95B066710	95B066490
IS-08-N2-S1	IS-08-N2-S2	IS-08-N2-03
95B067010	95B066730	95B066510
IS-08-N3-S1	IS-08-N3-S2	IS-08-N3-03
95B066930	95B066660	95B066440
IS-08-N4-S1	IS-08-N4-S2	IS-08-N4-03
95B066950	95B066680	95B066470
---	---	---
---	---	---
---	---	---
---	---	---
---	---	---
---	---	---
---	---	---
---	---	---
---	---	---
---	---	---
---	---	---
---	---	---
---	---	---
---	---	---
---	---	---
---	---	---
---	---	---
---	---	---
10-30 Vdc (-15/10%)	10-30 Vdc (-15/10%)	10-30 Vdc (-15/10%)
< 10%	< 10%	< 10%
< 10%	< 10%	< 10%
200 mA	200 mA	200 mA
---	---	---
< 10 mA	< 10 mA	< 10 mA
< 1,2 V (I=100mA)	< 1,2 V (I=100mA)	< 1,2 V (I=100mA)
Yellow	Yellow	Yellow
1000 Hz	1000 Hz	1000 Hz
< 50 ms	< 50 ms	< 50 ms
< 3%	< 3%	< 3%
Present (self-resetting)	Present (self-resetting)	Present (self-resetting)
Against polarity reversal inductive loads	Against polarity reversal inductive loads	Against polarity reversal inductive loads
(-25 ... +70 °C)	(-25 ... +70 °C)	(-25 ... +70 °C)
IP69K	IP69K	IP69K
---	---	---
---	---	3x 0,14 mm²
Stainless-Steel	Stainless-Steel	Stainless-Steel
LCP	LCP	LCP
* see page 5 of the Inductive Sensors Catalog	* see page 5 of the Inductive Sensors Catalog	* see page 5 of the Inductive Sensors Catalog
---	---	80 g
35g	55g	---

3 wires PNP or NPN

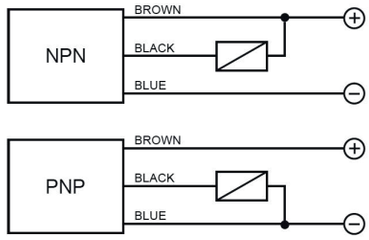

M12 3 pole

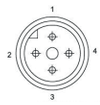

CONTACTS CONFIGURATION

Available	Contacts numbers			
	1	2	3	4
(NO or NC)	+		–	NO/NC

M8 3 pole

CONTACTS CONFIGURATION

Available	Contacts numbers		
	1 BROWN	3 BLUE	4 BLACK
NPN/PNP	+	–	NO/NC

STAINLESS STEEL M12

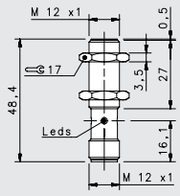

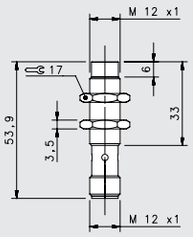

				SHORT STAINLESS STEEL	
				FLUSH	NON FLUSH
				M12 conn	M12 conn
NOMINAL SWITCHING DISTANCE				**2 mm**	**4 mm**
10-30 Vdc	PNP/NPN NO-NC	4 wires	order No.	---	---
				---	---
10-30 Vdc	PNP NO	3 wires	order No.	IS-12-M1-S2	IS-12-N1-S2
				95B060240	95B060280
10-30 Vdc	PNP NC	3 wires	order No.	IS-12-M2-S2	IS-12-N2-S2
				95B060250	95B060290
10-30 Vdc	NPN NO	3 wires	order No.	IS-12-M3-S2	IS-12-N3-S2
				95B060260	95B060300
10-30 Vdc	NPN NC	3 wires	order No.	IS-12-M4-S2	IS-12-N4-S2
				95B060270	95B060310
10-30 Vdc	PNP NO-NC	4 wires	order No.	---	---
				---	---
10-30 Vdc	NPN NO-NC	4 wires	order No.	---	---
				---	---
10-30 Vdc	NO-NC	2 wires	order No.	---	---
				---	---
20-250 Vac/Vdc	NO	2 wires	order No.	---	---
				---	---
20-250 Vac/Vdc	NC	2 wires	order No.	---	---
				---	---
20-250 Vac	NO	2/3wires	order No.	---	---
				---	---
10-30 Vdc	Analog 0-20 mA	3 wires	order No.	---	---
				---	---
NAMUR amplifier	NAMUR	2 wires	order No.	---	---
				---	---

Nominal Voltage	10-30 Vdc (-15/10%)	10-30 Vdc (-15/10%)
Residual Ripple	< 10%	< 10%
Hysteresis	< 10%	< 10%
Max. Output Current	200 mA	200 mA
Min. Output Current	---	---
Residual Current	< 10 mA	< 10 mA
Voltage Drop	< 1,8 V (I=100mA)	< 1,8 V (I=100mA)
Operation Led	Yellow	Yellow
Switching Frequency	1000 Hz	1000 Hz
Start Up Delay	< 50 ms	< 50 ms
Repeatability	< 3%	< 3%
Short Circuit Protection	Present (self-resetting)	Present (self-resetting)
Electric Protection	Against polarity reversal inductive loads	Against polarity reversal inductive loads
Temperature Limit	(-25 ... +70 °C)	(-25 ... +70 °C)
Protection Degree	IP69K	IP69K
Cable Length	---	---
Cable Section	---	---
Housing Material	Stainless-Steel	Stainless-Steel
Active face	LCP	LCP
Tightening torque	* see page 5 of the Inductive Sensors Catalog	* see page 5 of the Inductive Sensors Catalog
Weight - Cable Output	---	---
Weight - Connector Output	60 g	60 g

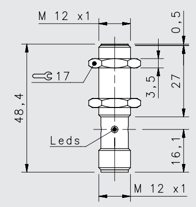

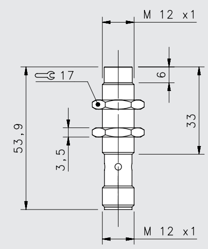

SHORT STAINLESS STEEL X2

FLUSH	NON FLUSH
M12 conn	M12 conn
4 mm	**8 mm**
---	---
---	---
IS-12-01-S2	IS-12-P1-S2
95B060000	95B060040
IS-12-02-S2	IS-12-P2-S2
95B060010	95B060050
IS-12-03-S2	IS-12-P3-S2
95B060020	95B060060
IS-12-04-S2	IS-12-P4-S2
95B060030	95B060070
---	---
---	---
---	---
---	---
---	---
---	---
---	---
---	---
---	---
---	---
---	---
---	---
---	---
---	---
---	---
---	---
10-30 Vdc (-15/10%)	10-30 Vdc (-15/10%)
< 10%	< 10%
< 10%	< 10%
200 mA	200 mA
---	---
< 10 mA	< 10 mA
< 1,2 V (I=100mA)	< 1,2 V (I=100mA)
Yellow	Yellow
500 Hz	500 Hz
< 75 ms	< 75 ms
< 3%	< 3%
Present (self-resetting)	Present (self-resetting)
Against polarity reversal inductive loads	Against polarity reversal inductive loads
(-25 ... +70 °C)	(-25 ... +70 °C)
IP69K	IP69K
---	---
---	---
Stainless-Steel	Stainless-Steel
LCP	LCP
* see page 5 of the Inductive Sensors Catalog	* see page 5 of the Inductive Sensors Catalog
---	---
60 g	60 g

M12 3 pole

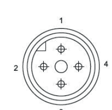

CONTACTS CONFIGURATION

Available	Contacts numbers			
	1	2	3	4
(NO or NC)	+		–	NO/NC

STAINLESS STEEL M18

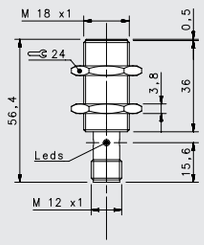

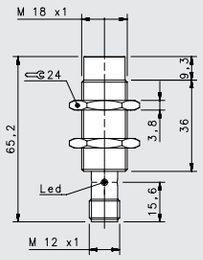

				SHORT STAINLESS STEEL	
				FLUSH	NON FLUSH
				M12 conn	M12 conn
NOMINAL SWITCHING DISTANCE				**5 mm**	**8 mm**
10-30 Vdc	PNP/NPN NO-NC	4 wires	order No.	---	---
				---	---
10-30 Vdc	PNP NO	3 wires	order No.	IS-18-M1-S2	IS-18-N1-S2
				95B060320	95B060360
10-30 Vdc	PNP NC	3 wires	order No.	IS-18-M2-S2	IS-18-N2-S2
				95B060330	95B060370
10-30 Vdc	NPN NO	3 wires	order No.	IS-18-M3-S2	IS-18-N3-S2
				95B060340	95B060380
10-30 Vdc	NPN NC	3 wires	order No.	IS-18-M4-S2	IS-18-N4-S2
				95B060350	95B060390
10-30 Vdc	PNP NO-NC	4 wires	order No.	---	---
				---	---
10-30 Vdc	NPN NO-NC	4 wires	order No.	---	---
				---	---
10-30 Vdc	NO-NC	2 wires	order No.	---	---
				---	---
20-250 Vac/Vdc	NO	2 wires	order No.	---	---
				---	---
20-250 Vac/Vdc	NC	2 wires	order No.	---	---
				---	---
20-250 Vac	NO	2/3wires	order No.	---	---
				---	---
10-30 Vdc	Analog 0-20 mA	3 wires	order No.	---	---
				---	---
NAMUR amplifier	NAMUR	2 wires	order No.	---	---
				---	---

Nominal Voltage	10-30 Vdc (-15/10%)	10-30 Vdc (-15/10%)
Residual Ripple	< 10%	< 10%
Hysteresis	< 10%	< 10%
Max. Output Current	200 mA	200 mA
Min. Output Current	---	---
Residual Current	< 10 mA	< 10 mA
Voltage Drop	< 1,8 V (I=100mA)	< 1,8 V (I=100mA)
Operation Led	Yellow	Yellow
Switching Frequency	1000 Hz	1000 Hz
Start Up Delay	< 50 ms	< 50 ms
Repeatability	< 3%	< 3%
Short Circuit Protection	Present (self-resetting)	Present (self-resetting)
Electric Protection	Against polarity reversal inductive loads	Against polarity reversal inductive loads
Temperature Limit	(-25 ... +70 °C)	(-25 ... +70 °C)
Protection Degree	IP69K	IP69K
Cable Length	---	---
Cable Section	---	---
Housing Material	Stainless-Steel	Stainless-Steel
Active face	LCP	LCP
Tightening torque	* see page 5 of the Inductive Sensors Catalog	* see page 5 of the Inductive Sensors Catalog
Weight - Cable Output	---	---
Weight - Connector Output	95g	95g

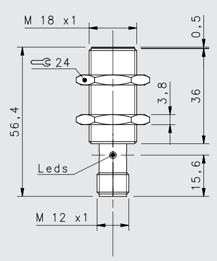

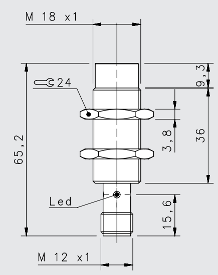

SHORT STAINLESS STEEL X2

FLUSH	NON FLUSH
M12 conn	M12 conn
8 mm	**14 mm**
---	---
---	---
IS-18-01-S2	IS-18-P1-S2
95B060080	95B060120
IS-18-02-S2	IS-18-P2-S2
95B060090	95B060130
IS-18-03-S2	IS-18-P3-S2
95B060100	95B060140
IS-18-04-S2	IS-18-P4-S2
95B060110	95B060150
---	---
---	---
---	---
---	---
---	---
---	---
---	---
---	---
---	---
---	---
---	---
---	---
---	---
---	---
---	---
---	---
10-30 Vdc (-15/10%)	10-30 Vdc (-15/10%)
< 10%	< 10%
< 10%	< 10%
200 mA	200 mA
---	---
< 10 mA	< 10 mA
< 1,2 V (I=100mA)	< 1,2 V (I=100mA)
Yellow	Yellow
200 Hz	200 Hz
< 75 ms	< 75 ms
< 3%	< 3%
Present (self-resetting)	Present (self-resetting)
Against polarity reversal inductive loads	Against polarity reversal inductive loads
(-25 ... +70 °C)	(-25 ... +70 °C)
IP69K	IP69K
---	---
---	---
Stainless-Steel	Stainless-Steel
LCP	LCP
* see page 5 of the Inductive Sensors Catalog	* see page 5 of the Inductive Sensors Catalog
---	---
95g	95g

M12 3 pole

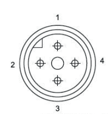

CONTACTS CONFIGURATION

Available	Contacts numbers			
	1	2	3	4
(NO or NC)	+		–	NO/NC

STAINLESS STEEL M30

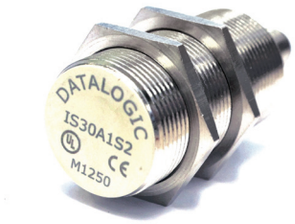

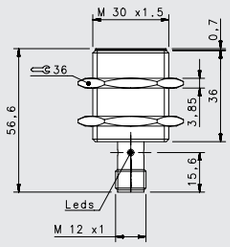

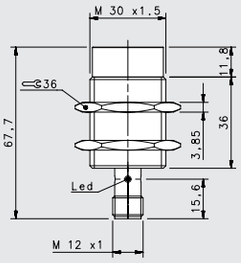

				SHORT STAINLESS STEEL	
				FLUSH	NON FLUSH
				M12 conn	M12
NOMINAL SWITCHING DISTANCE				**10 mm**	**15 mm**
10-30 Vdc	PNP/NPN NO-NC	4 wires	order No.	---	---
				---	---
10-30 Vdc	PNP NO	3 wires	order No.	IS-30-M1-S2	IS-30-N1-S2
				95B060400	95B060440
10-30 Vdc	PNP NC	3 wires	order No.	IS-30-M2-S2	IS-30-N2-S2
				95B060410	95B060450
10-30 Vdc	NPN NO	3 wires	order No.	IS-30-M3-S2	IS-30-N3-S2
				95B060420	95B060460
10-30 Vdc	NPN NC	3 wires	order No.	IS-30-M4-S2	IS-30-N4-S2
				95B060430	95B060470
10-30 Vdc	PNP NO-NC	4 wires	order No.	---	---
				---	---
10-30 Vdc	NPN NO-NC	4 wires	order No.	---	---
				---	---
10-30 Vdc	NO-NC	2 wires	order No.	---	---
				---	---
20-250 Vac/Vdc	NO	2 wires	order No.	---	---
				---	---
20-250 Vac/Vdc	NC	2 wires	order No.	---	---
				---	---
20-250 Vac	NO	2/3wires	order No.	---	---
				---	---
10-30 Vdc	Analog 0-20 mA	3 wires	order No.	---	---
				---	---
NAMUR amplifier	NAMUR	2 wires	order No.	---	---
				---	---

Nominal Voltage	10-30 Vdc (-15/10%)	10-30 Vdc (-15/10%)
Residual Ripple	< 10%	< 10%
Hysteresis	< 10%	< 10%
Max. Output Current	200 mA	200 mA
Min. Output Current	---	---
Residual Current	< 10 mA	< 10 mA
Voltage Drop	< 1,8 V (I=100mA)	< 1,8 V (I=100mA)
Operation Led	Yellow	Yellow
Switching Frequency	300 Hz	300 Hz
Start Up Delay	< 50 ms	< 50 ms
Repeatability	< 3%	< 3%
Short Circuit Protection	Present (self-resetting)	Present (self-resetting)
Electric Protection	Against polarity reversal inductive loads	Against polarity reversal inductive loads
Temperature Limit	(-25 ... +70 °C)	(-25 ... +70 °C)
Protection Degree	IP69K	IP69K
Cable Length	---	---
Cable Section	---	---
Housing Material	Stainless-Steel	Stainless-Steel
Active face	LCP	LCP
Tightening torque	* see page 5 of the Inductive Sensors Catalog	* see page 5 of the Inductive Sensors Catalog
Weight - Cable Output	---	---
Weight - Connector Output	170 g	170 g

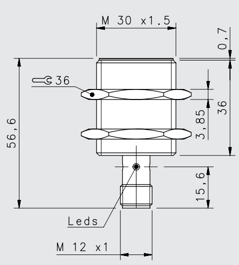

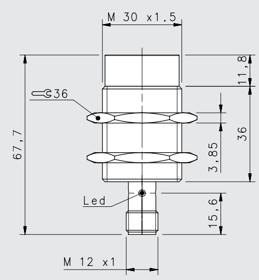

SHORT STAINLESS STEEL X2	
FLUSH	**NON FLUSH**
M12 conn	M12 conn
15 mm	**20 mm**
---	---
---	---
IS-30-O1-S2	IS-30-P1-S2
95B060160	95B060200
IS-30-O2-S2	IS-30-P2-S2
95B060170	95B060210
IS-30-O3-S2	IS-30-P3-S2
95B060180	95B060220
IS-30-O4-S2	IS-30-P4-S2
95B060190	95B060230
---	---
---	---
---	---
---	---
---	---
---	---
---	---
---	---
---	---
---	---
---	---
---	---
---	---
---	---
---	---
---	---
10-30 Vdc (-15/10%)	10-30 Vdc (-15/10%)
< 10%	< 10%
< 10%	< 10%
200 mA	200 mA
---	---
< 10 mA	< 10 mA
< 1,2 V (I=100mA)	< 1,2 V (I=100mA)
Yellow	Yellow
100 Hz	100 Hz
< 75 ms	< 75 ms
< 3%	< 3%
Present (self-resetting)	Present (self-resetting)
Against polarity reversal inductive loads	Against polarity reversal inductive loads
(-25 ... +70 °C)	(-25 ... +70 °C)
IP69K	IP69K
---	---
---	---
Stainless-Steel	Stainless-Steel
LCP	LCP
* see page 5 of the Inductive Sensors Catalog	* see page 5 of the Inductive Sensors Catalog
---	---
170 g	170 g

M12 3 pole

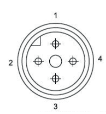

CONTACTS CONFIGURATION

Available	Contacts numbers			
	1	2	3	4
(NO or NC)	+		–	NO/NC

METAL FACE

Stainless Steel housing
Stainless Steel AISI 303 active face
Standard length
2 ... 8 mm
M12, M18
M12 connector
3 wires
PNP, NO
IP67 protection

REDUCTION FACTOR

	ALUMINUM (25°C)	STAINLESS STEEL AISI316L	COPPER	BRASS
Average red. Fact.	0,45	0,85	0,4	0,5

METAL FACE

METAL FACE M12

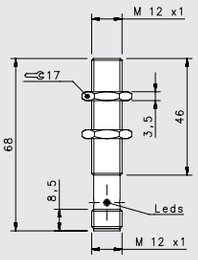

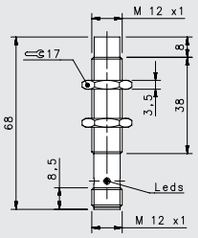

				METAL FACE	
				FLUSH	NON FLUSH
				M12 conn	M12 conn
NOMINAL SWITCHING DISTANCE				**2 mm**	**4 mm**
10-30 Vdc	PNP/NPN NO-NC	4 wires	order No.	---	---
				---	---
10-30 Vdc	PNP NO	3 wires	order No.	IS-12-I1-S2	IS-12-L1-S2
				95B065340	95B063871
10-30 Vdc	PNP NC	3 wires	order No.	---	---
				---	---
10-30 Vdc	NPN NO	3 wires	order No.	---	---
				---	---
10-30 Vdc	NPN NC	3 wires	order No.	---	---
				---	---
10-30 Vdc	PNP NO-NC	4 wires	order No.	---	---
				---	---
10-30 Vdc	NPN NO-NC	4 wires	order No.	---	---
				---	---
10-30 Vdc	NO-NC	2 wires	order No.	---	---
				---	---
20-250 Vac/Vdc	NO	2 wires	order No.	---	---
				---	---
20-250 Vac/Vdc	NC	2 wires	order No.	---	---
				---	---
20-250 Vac	NO	2/3wires	order No.	---	---
				---	---
10-30 Vdc	Analog 0-20 mA	3 wires	order No.	---	---
				---	---
NAMUR amplifier	NAMUR	2 wires	order No.	---	---
				---	---

Nominal Voltage	10-30 Vdc	10-30 Vdc
Residual Ripple	< 10%	< 10%
Hysteresis	< 15%	< 15%
Max. Output Current	200 mA	200 mA
Min. Output Current	---	---
Residual Current	< 0,01 mA	< 0,01 mA
Voltage Drop	< 1,5 V (I=100mA)	< 1,5 V (I=100mA)
Operation Led	Present	Present
Switching Frequency	2000 Hz	1000 Hz
Start Up Delay	---	---
Repeatability	< 1%	< 1%
Short Circuit Protection	Present (self-resetting)	Present (self-resetting)
Electric Protection	Against polarity reversal inductive loads	Against polarity reversal inductive loads
Temperature Limit	(-25 ... +70 °C)	(-25 ... +70 °C)
Protection Degree	IP67	IP67
Cable Length	---	---
Cable Section	---	---
Housing Material	Stainless-Steel	Stainless-Steel
Active face	Stainless Steel AISI 303	Stainless Steel AISI 303
Tightening torque	10Nm	10Nm
Weight - Cable Output	---	---
Weight - Connector Output	30 g	30 g

METAL FACE M18

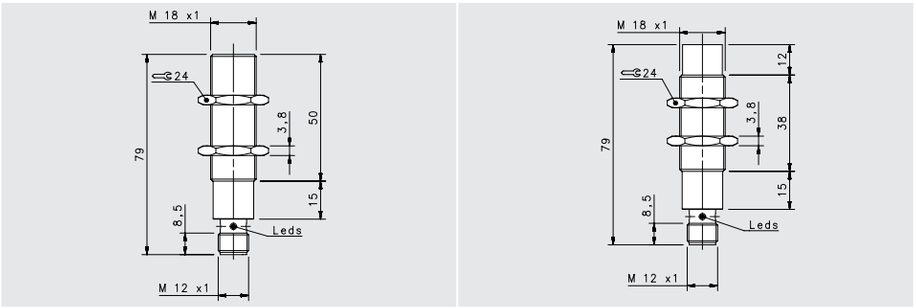

				METAL FACE	
				FLUSH	NON FLUSH
				M12 conn	M12 conn
NOMINAL SWITCHING DISTANCE				**5 mm**	**8 mm**
10-30 Vdc	PNP/NPN NO-NC	4 wires	order No.	---	---
				---	---
10-30 Vdc	PNP NO	3 wires	order No.	IS-18-I1-S2	IS-18-L1-S2
				95B065350	95B063881
10-30 Vdc	PNP NC	3 wires	order No.	---	---
				---	---
10-30 Vdc	NPN NO	3 wires	order No.	---	---
				---	---
10-30 Vdc	NPN NC	3 wires	order No.	---	---
				---	---
10-30 Vdc	PNP NO-NC	4 wires	order No.	---	---
				---	---
10-30 Vdc	NPN NO-NC	4 wires	order No.	---	---
				---	---
10-30 Vdc	NO-NC	2 wires	order No.	---	---
				---	---
20-250 Vac/Vdc	NO	2 wires	order No.	---	---
				---	---
20-250 Vac/Vdc	NC	2 wires	order No.	---	---
				---	---
20-250 Vac	NO	2/3 wires	order No.	---	---
				---	---
10-30 Vdc	Analog 0-20 mA	3 wires	order No.	---	---
				---	---
NAMUR amplifier	NAMUR	2 wires	order No.	---	---
				---	---

Nominal Voltage	10-30 Vdc	10-30 Vdc
Residual Ripple	< 10%	< 10%
Hysteresis	< 15%	< 15%
Max. Output Current	200 mA	200 mA
Min. Output Current	> 1,6 mA	> 1,6 mA
Residual Current	< 0,01 mA	< 0,01 mA
Voltage Drop	< 1,5 V	< 1,5 V
Operation Led	Present	Present
Switching Frequency	1000 Hz	500 Hz
Start Up Delay	---	---
Repeatability	< 1%	< 1%
Short Circuit Protection	Present (self-resetting)	Present (self-resetting)
Electric Protection	Against polarity reversal inductive loads	Against polarity reversal inductive loads
Temperature Limit	(-25 ... +70 °C)	(-25 ... +70 °C)
Protection Degree	IP67	IP67
Cable Length	---	---
Cable Section	---	---
Housing Material	Stainless-Steel	Stainless-Steel
Active face	Stainless Steel AISI 303	Stainless Steel AISI 303
Tightening torque	10Nm	10Nm
Weight - Cable Output	---	---
Weight - Connector Output	95g	95g

WELD FIELD IMMUNE

Stainless Steel housing
PTFE active face
Standard length
Operating distance 2 ... 8 mm
M12, M18
M12 connector
3 wires
PNP, NO
IP67 protection

REDUCTION FACTOR

	ALUMINUM (25°C)	STAINLESS STEEL AISI316L	COPPER	BRASS
Average red. Fact.	0,45	0,85	0,4	0,5

WELD FIELD IMMUNE

WELD FIELD IMMUNE M12

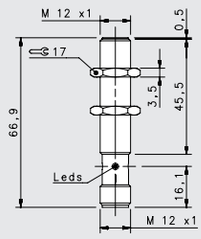

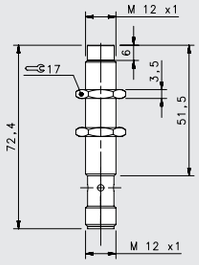

				FIELD IMMUNE STAINLESS STEEL	
				FLUSH	NON FLUSH
				M12 conn	M12 conn
NOMINAL SWITCHING DISTANCE				**2 mm**	**4 mm**
10-30 Vdc	PNP/NPN NO-NC	4 wires	order No.	---	---
				---	---
10-30 Vdc	PNP NO	3 wires	order No.	IS-F12-S1-S2	IS-F12-T1-S2
				95B065360	95B065370
10-30 Vdc	PNP NC	3 wires	order No.	---	---
				---	---
10-30 Vdc	NPN NO	3 wires	order No.	---	---
				---	---
10-30 Vdc	NPN NC	3 wires	order No.	---	---
				---	---
10-30 Vdc	PNP NO-NC	4 wires	order No.	---	---
				---	---
10-30 Vdc	NPN NO-NC	4 wires	order No.	---	---
				---	---
10-30 Vdc	NO-NC	2 wires	order No.	---	---
				---	---
20-250 Vac/Vdc	NO	2 wires	order No.	---	---
				---	---
20-250 Vac/Vdc	NC	2 wires	order No.	---	---
				---	---
20-250 Vac	NO	2/3wires	order No.	---	---
				---	---
10-30 Vdc	Analog 0-20 mA	3 wires	order No.	---	---
				---	---
NAMUR amplifier	NAMUR	2 wires	order No.	---	---
				---	---

Nominal Voltage	10-30 Vdc	10-30 Vdc
Residual Ripple	< 10%	< 10%
Hysteresis	< 15%	< 15%
Max. Output Current	200 mA	200 mA
Min. Output Current	< 10mA	< 10mA
Residual Current	< 0,1 mA	< 0,1 mA
Voltage Drop	< 1,5V	< 1,5V
Operation Led	Present	Present
Switching Frequency	2000 Hz	1000 Hz
Start Up Delay	< 0,1 ms	< 0,1 ms
Repeatability	< 1%	< 1%
Short Circuit Protection	Present (self-resetting)	Present (self-resetting)
Electric Protection	Against polarity reversal inductive loads	Against polarity reversal inductive loads
Temperature Limit	(-25 ... +70 °C)	(-25 ... +70 °C)
Protection Degree	IP67	IP67
Cable Length	---	---
Cable Section	---	---
Housing Material	Stainless-Steel	Stainless-Steel
Active face	PTFE	PTFE
Tightening torque	10 Nm	10 Nm
Weight - Cable Output	---	---
Weight - Connector Output	25g	23g

WELD FIELD IMMUNE M18

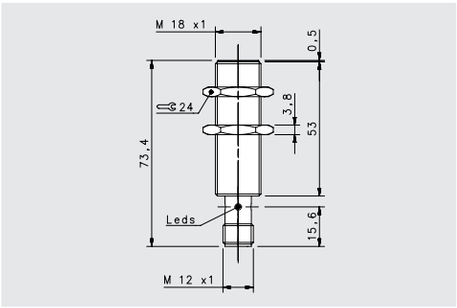

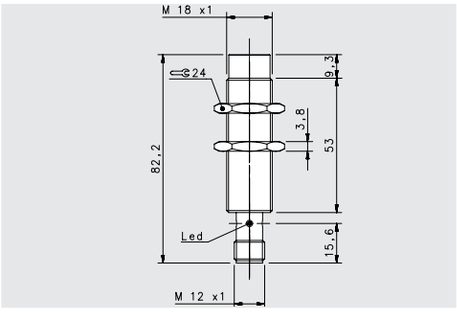

FIELD IMMUNE STAINLESS STEEL

				FLUSH	NON FLUSH
				M12 conn	M12 conn
NOMINAL SWITCHING DISTANCE				**5 mm**	**8 mm**
10-30 Vdc	PNP/NPN NO-NC	4 wires	order No.	---	---
				---	---
10-30 Vdc	PNP NO	3 wires	order No.	IS-F18-S1-S2	IS-F18-T1-S2
				95B065380	95B065390
10-30 Vdc	PNP NC	3 wires	order No.	---	---
				---	---
10-30 Vdc	NPN NO	3 wires	order No.	---	---
				---	---
10-30 Vdc	NPN NC	3 wires	order No.	---	---
				---	---
10-30 Vdc	PNP NO-NC	4 wires	order No.	---	---
				---	---
10-30 Vdc	NPN NO-NC	4 wires	order No.	---	---
				---	---
10-30 Vdc	NO-NC	2 wires	order No.	---	---
				---	---
20-250 Vac/Vdc	NO	2 wires	order No.	---	---
				---	---
20-250 Vac/Vdc	NC	2 wires	order No.	---	---
				---	---
20-250 Vac	NO	2/3 wires	order No.	---	---
				---	---
10-30 Vdc	Analog 0-20 mA	3 wires	order No.	---	---
				---	---
NAMUR amplifier	NAMUR	2 wires	order No.	---	---
				---	---

Nominal Voltage	10-30 Vdc	10-30 Vdc
Residual Ripple	< 10%	< 10%
Hysteresis	< 15%	< 15%
Max. Output Current	200 mA	200 mA
Min. Output Current	< 10mA	< 10mA
Residual Current	< 0,1 mA	< 0,1 mA
Voltage Drop	< 1,5V	< 1,5V
Operation Led	Present	Present
Switching Frequency	1000 Hz	500 Hz
Start Up Delay	< 0,2 ms	< 0,5 ms
Repeatability	< 1%	< 1%
Short Circuit Protection	Present (self-resetting)	Present (self-resetting)
Electric Protection	Against polarity reversal inductive loads	Against polarity reversal inductive loads
Temperature Limit	(-25 ... +70 °C)	(-25 ... +70 °C)
Protection Degree	IP67	IP67
Cable Length	---	---
Cable Section	---	---
Housing Material	Stainless-Steel	Stainless-Steel
Active face	PTFE	PTFE
Tightening torque	30 Nm	30 Nm
Weight - Cable Output	---	---
Weight - Connector Output	94g	91g

INDUCTIVE AC

Nickel-plated Brass housing
PA 16 active face
Standard length
Operating distance 2 ... 10 mm
M12, M18, M30
cable or M12 connector
20+250 Vac (50,60 Hz)
2 or 3 wires
NO
IP67 protection

REDUCTION FACTOR

	ALUMINUM (25°C)	STAINLESS STEEL AISI316L	COPPER	BRASS
Average red. Fact.	0,3...0,45	0,6...1	0,25...0,45	0,35...0,5

INDUCTIVE AC

INDUCTIVE AC M12

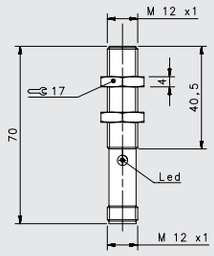

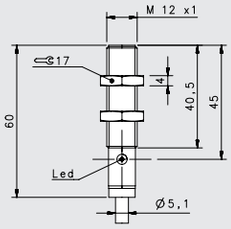

STANDARD VAC

FLUSH

				M12 conn	cable
NOMINAL SWITCHING DISTANCE				**2 mm**	**2 mm**
10-30 Vdc	PNP/NPN NO-NC	4 wires	order No.	---	---
10-30 Vdc	PNP NO	3 wires	order No.	---	---
10-30 Vdc	PNP NC	3 wires	order No.	---	---
10-30 Vdc	NPN NO	3 wires	order No.	---	---
10-30 Vdc	NPN NC	3 wires	order No.	---	---
10-30 Vdc	PNP NO-NC	4 wires	order No.	---	---
10-30 Vdc	NPN NO-NC	4 wires	order No.	---	---
10-30 Vdc	NO-NC	2 wires	order No.	---	---
20-250 Vac/Vdc	NO	2 wires	order No.	---	---
20-250 Vac/Vdc	NC	2 wires	order No.	---	---
20-250 Vac	NO	2/3wires	order No.	IS-12-A15-S2 95B060690	IS-12-A15-03 95B060680
10-30 Vdc	Analog 0-20 mA	3 wires	order No.	---	---
NAMUR amplifier	NAMUR	2 wires	order No.	---	---

Nominal Voltage	20+250 Vac (50,60 Hz)	20+250 Vac (50,60 Hz)
Residual Ripple	< 10%	< 10%
Hysteresis	< 10%	< 10%
Max. Output Current	500 mA, inrush:1,5A	500 mA, inrush:1,5A
Min. Output Current	20 mA	20 mA
Residual Current	< 0,7 mA	< 0,7 mA
Voltage Drop	< 4 V (I=100mA)	< 4 V (I=100mA)
Operation Led	Yellow	Yellow
Switching Frequency	25 Hz	25 Hz
Start Up Delay	< 300 ms	< 300 ms
Repeatability	5%	5%
Short Circuit Protection	Present (self-resetting)	Present (self-resetting)
Electric Protection	Against polarity reversal inductive loads	Against polarity reversal inductive loads
Temperature Limit	(-25 ... +70 °C)	(-25 ... +70 °C)
Protection Degree	IP67	IP67
Cable Length	---	2 m
Cable Section	---	2 x 0,25 mm²
Housing Material	Nickel-plated brass	Nickel-plated brass
Active face	PA 16	PA 16
Tightening torque	* see page 5 of the Inductive Sensors Catalog	* see page 5 of the Inductive Sensors Catalog
Weight - Cable Output	---	145g
Weight - Connector Output	95g	---

INDUCTIVE AC M18

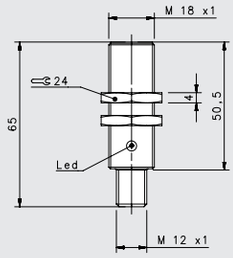

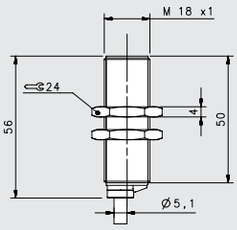

STANDARD VAC

FLUSH

				M12 conn	cable
NOMINAL SWITCHING DISTANCE				**5 mm**	**5 mm**
10-30 Vdc	PNP/NPN NO-NC	4 wires	order No.	---	---
10-30 Vdc	PNP NO	3 wires	order No.	---	---
10-30 Vdc	PNP NC	3 wires	order No.	---	---
10-30 Vdc	NPN NO	3 wires	order No.	---	---
10-30 Vdc	NPN NC	3 wires	order No.	---	---
10-30 Vdc	PNP NO-NC	4 wires	order No.	---	---
10-30 Vdc	NPN NO-NC	4 wires	order No.	---	---
10-30 Vdc	NO-NC	2 wires	order No.	---	---
20-250 Vac/Vdc	NO	2 wires	order No.	---	---
20-250 Vac/Vdc	NC	2 wires	order No.	---	---
20-250 Vac	NO	2/3 wires	order No.	IS-18-A15-S2 95B060780	IS-18-A15-03 95B060770
10-30 Vdc	Analog 0-20 mA	3 wires	order No.	---	---
NAMUR amplifier	NAMUR	2 wires	order No.	---	---

Nominal Voltage	20+250 Vac (50,60 Hz)	20+250 Vac (50,60 Hz)
Residual Ripple	< 10%	< 10%
Hysteresis	< 10%	< 10%
Max. Output Current	500 mA, inrush:1,5A	500 mA, inrush:1,5A
Min. Output Current	20 mA	20 mA
Residual Current	< 0,7 mA	< 0,7 mA
Voltage Drop	< 4 V (I=100mA)	< 4 V (I=100mA)
Operation Led	Yellow	Yellow
Switching Frequency	25 Hz	25 Hz
Start Up Delay	< 300 ms	< 300 ms
Repeatability	5%	5%
Short Circuit Protection	Present (self-resetting)	Present (self-resetting)
Electric Protection	Against polarity reversal inductive loads	Against polarity reversal inductive loads
Temperature Limit	(-25 ... +70 °C)	(-25 ... +70 °C)
Protection Degree	IP67	IP67
Cable Length	---	2 m
Cable Section	---	2 x 0,25 mm²
Housing Material	Nickel-plated brass	Nickel-plated brass
Active face	PA 16	PA 16
Tightening torque	* see page 5 of the Inductive Sensors Catalog	* see page 5 of the Inductive Sensors Catalog
Weight - Cable Output	---	145g
Weight - Connector Output	95g	---

INDUCTIVE AC M30

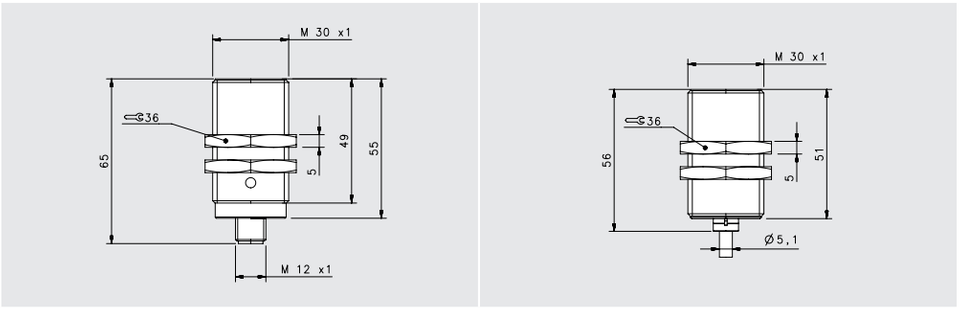

STANDARD VAC

FLUSH

				M12 conn	cable
NOMINAL SWITCHING DISTANCE				**10 mm**	**10 mm**
10-30 Vdc	PNP/NPN NO-NC	4 wires		---	---
			order No.	---	---
10-30 Vdc	PNP NO	3 wires		---	---
			order No.	---	---
10-30 Vdc	PNP NC	3 wires		---	---
			order No.	---	---
10-30 Vdc	NPN NO	3 wires		---	---
			order No.	---	---
10-30 Vdc	NPN NC	3 wires		---	---
			order No.	---	---
10-30 Vdc	PNP NO-NC	4 wires		---	---
			order No.	---	---
10-30 Vdc	NPN NO-NC	4 wires		---	---
			order No.	---	---
10-30 Vdc	NO-NC	2 wires		---	---
			order No.	---	---
20-250 Vac/Vdc	NO	2 wires		---	---
			order No.	---	---
20-250 Vac/Vdc	NC	2 wires		---	---
			order No.	---	---
20-250 Vac	NO	2/3wires		IS-30-A15-S2	IS-30-A15-03
			order No.	95B060820	95B060810
10-30 Vdc	Analog 0-20 mA	3 wires		---	---
			order No.	---	---
NAMUR amplifier	NAMUR	2 wires		---	---
			order No.	---	---

Nominal Voltage	20÷250 Vac (50,60 Hz)	20÷250 Vac (50,60 Hz)
Residual Ripple	< 10%	< 10%
Hysteresis	< 10%	< 10%
Max. Output Current	500 mA, inrush:1,5A	500 mA, inrush:1,5A
Min. Output Current	20 mA	20 mA
Residual Current	< 0,7 mA	< 0,7 mA
Voltage Drop	< 4 V (I=100mA)	< 4 V (I=100mA)
Operation Led	Yellow	Yellow
Switching Frequency	25 Hz	25 Hz
Start Up Delay	< 300 ms	< 300 ms
Repeatability	5%	5%
Short Circuit Protection	Present (self-resetting)	Present (self-resetting)
Electric Protection	Against polarity reversal inductive loads	Against polarity reversal inductive loads
Temperature Limit	(-25 ... +70 °C)	(-25 ... +70 °C)
Protection Degree	IP67	IP67
Cable Length	---	2 m
Cable Section	---	2 x 0,25 mm²
Housing Material	Nickel-plated brass	Nickel-plated brass
Active face	PA 16	PA 16
Tightening torque	* see page 5 of the Inductive Sensors Catalog	* see page 5 of the Inductive Sensors Catalog
Weight - Cable Output	---	145g
Weight - Connector Output	95g	---

INDUCTIVE AC

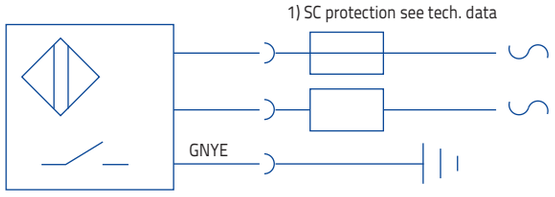

Double key connector for inductive AC sensors

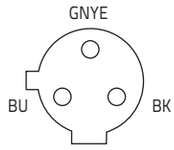

NAMUR

Stainless Steel housing
LCP active face
Short length
Operating distance 0.8 ... 15 mm
M5, M8, M12, M30
Cable, M8 or M12 connector
2 wires
IP67 protection

REDUCTION FACTOR

	ALUMINUM (25°C)	STAINLESS STEEL AISI316L	COPPER	BRASS
FLUSH	0,3...0,5	0,7...0,9	0,2...0,5	0,4...0,6
NON-FLUSH	0,4...0,6	0,7...1,05	0,4...0,5	0,5...0,7

M12/18/30 FLUSH models are ATEX certified
I I 3G EX nA II T6
I I 3D EX tD A22 IP67 T85°C

NAMUR

NAMUR M5

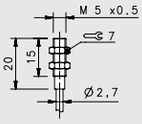

				NAMUR FLUSH
				cable
NOMINAL SWITCHING DISTANCE				**0,8 mm**
10-30 Vdc	PNP/NPN NO-NC	4 wires	order No.	--- ---
10-30 Vdc	PNP NO	3 wires	order No.	--- ---
10-30 Vdc	PNP NC	3 wires	order No.	--- ---
10-30 Vdc	NPN NO	3 wires	order No.	--- ---
10-30 Vdc	NPN NC	3 wires	order No.	--- ---
10-30 Vdc	PNP NO-NC	4 wires	order No.	--- ---
10-30 Vdc	NPN NO-NC	4 wires	order No.	--- ---
10-30 Vdc	NO-NC	2 wires	order No.	--- ---
20-250 Vac/Vdc	NO	2 wires	order No.	--- ---
20-250 Vac/Vdc	NC	2 wires	order No.	--- ---
20-250 Vac	NO	2/3wires	order No.	--- ---
10-30 Vdc	Analog 0-20 mA	3 wires	order No.	--- ---
NAMUR amplifier	NAMUR	2 wires	order No.	IS-05-A20-03 95B065410

Nominal Voltage	6÷12 V DC
Residual Ripple	---
Hysteresis	< 10%
Max. Output Current	< 3 mA (metal absent)
Min. Output Current	< 1 mA (metal present)
Residual Current	---
Voltage Drop	---
Operation Led	---
Switching Frequency	2000 Hz
Start Up Delay	< 10 ms
Repeatability	---
Short Circuit Protection	Present (self-resetting)
Electric Protection	Against polarity reversal inductive loads
Temperature Limit	(-25 ... +70 °C)
Protection Degree	IP67
Cable Length	2 m (PVC)
Cable Section	2x 0,15 mm²
Housing Material	Stainless-Steel
Active face	LCP
Tightening torque	1,5Nm
Weight - Cable Output	25g
Weight - Connector Output	---

2 wires NAMUR

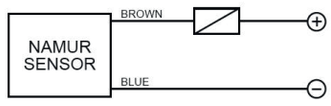

M8 2 wires NAMUR

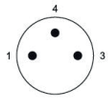

View of
triple male
connector

CONTACTS CONFIGURATION

Available	Contacts numbers		
	1	3	4
NAMUR	+	–	

NAMUR M6.5

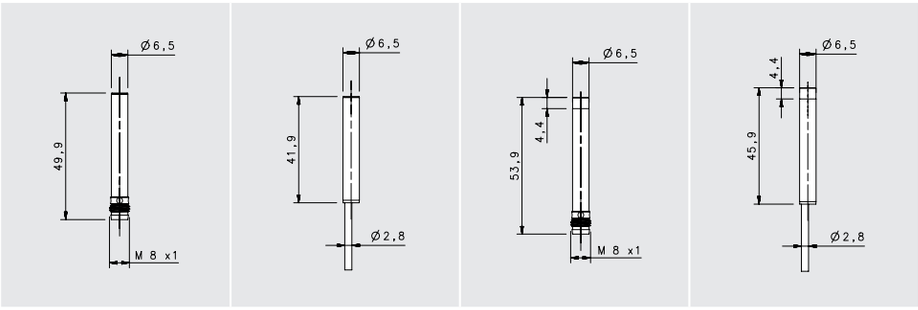

				NAMUR			
				FLUSH		NON FLUSH	
				M8 conn	cable	M8 conn	cable
NOMINAL SWITCHING DISTANCE				**1 mm**	**1 mm**	**2 mm**	**2 mm**
10-30 Vdc	PNP/NPN NO-NC	4 wires	order No.	--- ---	--- ---	--- ---	--- ---
10-30 Vdc	PNP NO	3 wires	order No.	--- ---	--- ---	--- ---	--- ---
10-30 Vdc	PNP NC	3 wires	order No.	--- ---	--- ---	--- ---	--- ---
10-30 Vdc	NPN NO	3 wires	order No.	--- ---	--- ---	--- ---	--- ---
10-30 Vdc	NPN NC	3 wires	order No.	--- ---	--- ---	--- ---	--- ---
10-30 Vdc	PNP NO-NC	4 wires	order No.	--- ---	--- ---	--- ---	--- ---
10-30 Vdc	NPN NO-NC	4 wires	order No.	--- ---	--- ---	--- ---	--- ---
10-30 Vdc	NO-NC	2 wires	order No.	--- ---	--- ---	--- ---	--- ---
20-250 Vac/Vdc	NO	2 wires	order No.	--- ---	--- ---	--- ---	--- ---
20-250 Vac/Vdc	NC	2 wires	order No.	--- ---	--- ---	--- ---	--- ---
20-250 Vac	NO	2/3 wires	order No.	--- ---	--- ---	--- ---	--- ---
10-30 Vdc	Analog 0-20 mA	3 wires	order No.	--- ---	--- ---	--- ---	--- ---
NAMUR amplifier	NAMUR	2 wires	order No.	IS-65-A20-S1 95B066310	IS-65-A20-03 95B066290	IS-65-C20-S1 95B066320	IS-65-C20-03 95B066300

Nominal Voltage	7,7 + 9 V DC	7,7 + 9 V DC	7,7 + 9 V DC	7,7 + 9 V DC
Residual Ripple	< 10%	< 10%	< 10%	< 10%
Hysteresis	< 10%	< 10%	< 10%	< 10%
Max. Output Current	< 3 mA (metal absent)	< 3 mA (metal absent)	< 3 mA (metal absent)	< 3 mA (metal absent)
Min. Output Current	< 1 mA (metal present)	< 1 mA (metal present)	< 1 mA (metal present)	< 1 mA (metal present)
Residual Current	---	---	---	---
Voltage Drop	---	---	---	---
Operation Led	---	---	---	---
Switching Frequency	2000 Hz	2000 Hz	2000 Hz	2000 Hz
Start Up Delay	---	---	---	---
Repeatability	< 3%	< 3%	< 3%	< 3%
Short Circuit Protection	Present (self-resetting)	Present (self-resetting)	Present (self-resetting)	Present (self-resetting)
Electric Protection	Against polarity reversal inductive loads	Against polarity reversal inductive loads	Against polarity reversal inductive loads	Against polarity reversal inductive loads
Temperature Limit	(-25 ... +60 °C)	(-25 ... +60 °C)	(-25 ... +60 °C)	(-25 ... +60 °C)
Protection Degree	IP67	IP67	IP67	IP67
Cable Length	---	2 m	---	2 m
Cable Section	---	2x 0,25 mm²	---	2 x 0,25 mm²
Housing Material	Nickel-plated brass	Nickel-plated brass	Nickel-plated brass	Nickel-plated brass
Active face	LCP	LCP	LCP	LCP
Weight - Cable Output	---	80 g	---	80 g
Weight - Connector Output	40 g	---	40 g	---

NAMUR M8

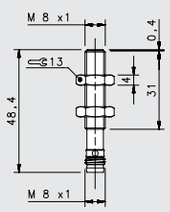

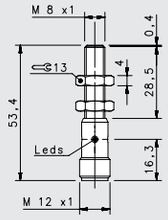

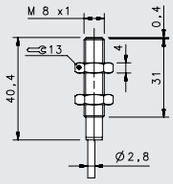

				NAMUR		
				FLUSH		
				M8 conn	M12 conn	cable
NOMINAL SWITCHING DISTANCE				**1 mm**	**1 mm**	**1 mm**
10-30 Vdc	PNP/NPN NO-NC	4 wires	order No.	---	---	---
				---	---	---
10-30 Vdc	PNP NO	3 wires	order No.	---	---	---
				---	---	---
10-30 Vdc	PNP NC	3 wires	order No.	---	---	---
				---	---	---
10-30 Vdc	NPN NO	3 wires	order No.	---	---	---
				---	---	---
10-30 Vdc	NPN NC	3 wires	order No.	---	---	---
				---	---	---
10-30 Vdc	PNP NO-NC	4 wires	order No.	---	---	---
				---	---	---
10-30 Vdc	NPN NO-NC	4 wires	order No.	---	---	---
				---	---	---
10-30 Vdc	NO-NC	2 wires	order No.	---	---	---
				---	---	---
20-250 Vac/Vdc	NO	2 wires	order No.	---	---	---
				---	---	---
20-250 Vac/Vdc	NC	2 wires	order No.	---	---	---
				---	---	---
20-250 Vac	NO	2/3wires	order No.	---	---	---
				---	---	---
10-30 Vdc	Analog 0-20 mA	3 wires	order No.	---	---	---
				---	---	---
NAMUR amplifier	NAMUR	2 wires	order No.	IS-08-A20-S1	IS-08-A20-S2	S-08-A20-03
				95B066780	95B066760	95B066740

Nominal Voltage	7,7 + 9 V DC	7,7 + 9 V DC	7,7 + 9 V DC
Residual Ripple	< 10%	< 10%	< 10%
Hysteresis	< 10%	< 10%	< 10%
Max. Output Current	< 3 mA (metal absent)	< 3 mA (metal absent)	< 3 mA (metal absent)
Min. Output Current	< 1 mA (metal present)	< 1 mA (metal present)	< 1 mA (metal present)
Residual Current	---	---	---
Voltage Drop	---	---	---
Operation Led	---	---	---
Switching Frequency	2000 Hz	2000 Hz	2000 Hz
Start Up Delay	---	---	---
Repeatability	< 3%	< 3%	< 3%
Short Circuit Protection	Present (self-resetting)	Present (self-resetting)	Present (self-resetting)
Electric Protection	Against polarity reversal inductive loads	Against polarity reversal inductive loads	Against polarity reversal inductive loads
Temperature Limit	(-25 ... +60 °C)	(-25 ... +60 °C)	(-25 ... +60 °C)
Protection Degree	IP67	IP67	IP67
Cable Length	---	---	2 m
Cable Section	---	---	2x 0,25 mm²
Housing Material	Nickel-plated brass	Nickel-plated brass	Nickel-plated brass
Active face	LCP	LCP	LCP
Tightening torque	* see page 5 of the Inductive Sensors Catalog	* see page 5 of the Inductive Sensors Catalog	* see page 5 of the Inductive Sensors Catalog
Weight - Cable Output			80 g
Weight - Connector Output	35g	55g	---

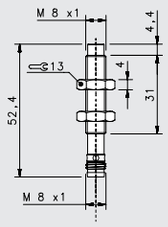

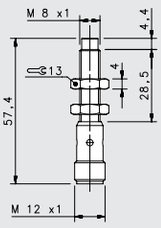

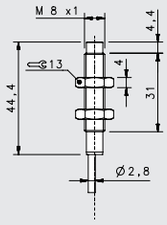

NAMUR		
NON FLUSH		
M8 conn	M12 conn	cable
2 mm	**2 mm**	**2 mm**
---	---	---
---	---	---
---	---	---
---	---	---
---	---	---
---	---	---
---	---	---
---	---	---
---	---	---
---	---	---
---	---	---
---	---	---
---	---	---
---	---	---
---	---	---
---	---	---
---	---	---
---	---	---
---	---	---
---	---	---
---	---	---
---	---	---
---	---	---
---	---	---
---	---	---
---	---	---
---	---	---
IS-08-C20-S1	IS-08-C20-S2	IS-08-C20-03
95B066790	95B066770	95B066750
7,7 + 9 V DC	7,7 + 9 V DC	7,7 + 9 V DC
< 10%	< 10%	< 10%
< 10%	< 10%	< 10%
< 3 mA (metal absent)	< 3 mA (metal absent)	< 3 mA (metal absent)
< 1 mA (metal present)	< 1 mA (metal present)	< 1 mA (metal present)
---	---	---
---	---	---
---	---	---
2000 Hz	2000 Hz	2000 Hz
---	---	---
< 3%	< 3%	< 3%
Present (self-resetting)	Present (self-resetting)	Present (self-resetting)
Against polarity reversal inductive loads	Against polarity reversal inductive loads	Against polarity reversal inductive loads
(-25 ... +60 °C)	(-25 ... +60 °C)	(-25 ... +60 °C)
IP67	IP67	IP67
---	---	2 m
---	---	2 x 0,25 mm²
Nickel-plated brass	Nickel-plated brass	Nickel-plated brass
LCP	LCP	LCP
* see page 5 of the Inductive Sensors Catalog	* see page 5 of the Inductive Sensors Catalog	* see page 5 of the Inductive Sensors Catalog
		80 g
35g	55g	---

2 wires NAMUR

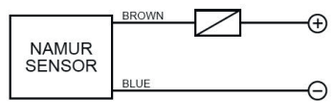

M8 2 wires NAMUR

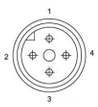

CONTACTS CONFIGURATION

Available	Contacts numbers		
	1	3	4
NAMUR	+	–	

M12 2 wires NAMUR

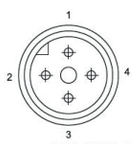

View of quadripole male connector

CONTACTS CONFIGURATION

Available	Contacts numbers			
	1	2	3	4
NAMUR	+		–	

NAMUR M12

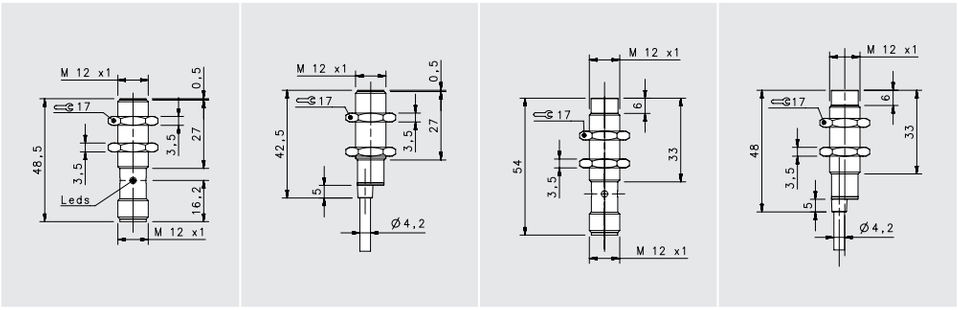

				NAMUR			
				FLUSH		NON FLUSH	
				M12 conn	cable	M12 conn	cable
NOMINAL SWITCHING DISTANCE				**2 mm**	**2 mm**	**4mm**	**4mm**
10-30 Vdc	PNP/NPN NO-NC	4 wires	order No.	---	---	---	---
				---	---	---	---
10-30 Vdc	PNP NO	3 wires	order No.	---	---	---	---
				---	---	---	---
10-30 Vdc	PNP NC	3 wires	order No.	---	---	---	---
				---	---	---	---
10-30 Vdc	NPN NO	3 wires	order No.	---	---	---	---
				---	---	---	---
10-30 Vdc	NPN NC	3 wires	order No.	---	---	---	---
				---	---	---	---
10-30 Vdc	PNP NO-NC	4 wires	order No.	---	---	---	---
				---	---	---	---
10-30 Vdc	NPN NO-NC	4 wires	order No.	---	---	---	---
				---	---	---	---
10-30 Vdc	NO-NC	2 wires	order No.	---	---	---	---
				---	---	---	---
20-250 Vac/Vdc	NO	2 wires	order No.	---	---	---	---
				---	---	---	---
20-250 Vac/Vdc	NC	2 wires	order No.	---	---	---	---
				---	---	---	---
20-250 Vac	NO	2/3wires	order No.	---	---	---	---
				---	---	---	---
10-30 Vdc	Analog 0-20 mA	3 wires	order No.	---	---	---	---
				---	---	---	---
NAMUR amplifier	NAMUR	2 wires	order No.	IS-12-A20-S2	IS-12-A20-03	IS-12-C20-S2	IS-12-C20-03
				95B064180	95B064160	95B064190	95B064170

Nominal Voltage	7,7 + 9 V DC	7,7 + 9 V DC	7,7 + 9 V DC	7,7 + 9 V DC
Residual Ripple	< 10%	< 10%	< 10%	< 10%
Hysteresis	< 10%	< 10%	< 10%	< 10%
Max. Output Current	< 3 mA (metal absent)	< 3 mA (metal absent)	< 3 mA (metal absent)	< 3 mA (metal absent)
Min. Output Current	< 1 mA (metal present)	< 1 mA (metal present)	< 1 mA (metal present)	< 1 mA (metal present)
Residual Current	---	---	---	---
Voltage Drop	---	---	---	---
Operation Led	---	---	---	---
Switching Frequency	2000 Hz	2000 Hz	2000 Hz	2000 Hz
Start Up Delay	---	---	---	---
Repeatability	< 3%	< 3%	< 3%	< 3%
Short Circuit Protection	Present (self-resetting)	Present (self-resetting)	Present (self-resetting)	Present (self-resetting)
Electric Protection	Against polarity reversal inductive loads	Against polarity reversal inductive loads	Against polarity reversal inductive loads	Against polarity reversal inductive loads
Temperature Limit	(-25 ... +60 °C)	(-25 ... +60 °C)	(-25 ... +60 °C)	(-25 ... +60 °C)
Protection Degree	IP67	IP67	IP67	IP67
Cable Length	---	2 m	---	2 m
Cable Section	---	2 x 0,25 mm^2	---	2 x 0,25 mm^2
Housing Material	Nickel-plated brass	Nickel-plated brass	Nickel-plated brass	Nickel-plated brass
Active face	LCP	LCP	LCP	LCP
Tightening torque	* see page 5 of the Inductive Sensors Catalog	* see page 5 of the Inductive Sensors Catalog	* see page 5 of the Inductive Sensors Catalog	* see page 5 of the Inductive Sensors Catalog
Weight - Cable Output	---	110 g	---	110 g
Weight - Connector Output	60 g	---	60 g	---

NAMUR M18

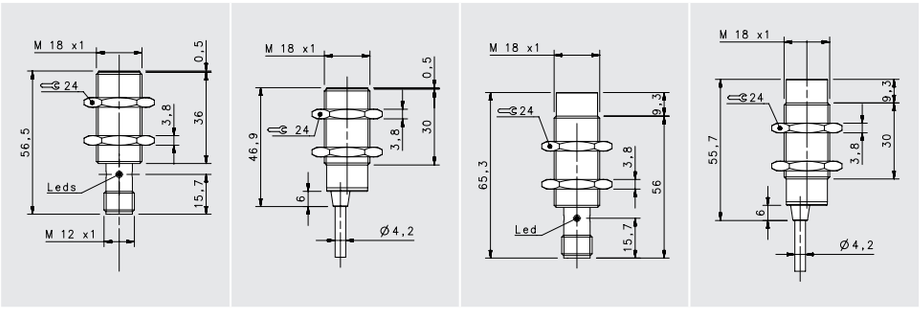

				NAMUR			
				FLUSH		NON FLUSH	
				M12 conn	cable	M12 conn	cable
NOMINAL SWITCHING DISTANCE				**5mm**	**5mm**	**8mm**	**8mm**
10-30 Vdc	PNP/NPN NO-NC	4 wires	order No.	---	---	---	---
				---	---	---	---
10-30 Vdc	PNP NO	3 wires	order No.	---	---	---	---
				---	---	---	---
10-30 Vdc	PNP NC	3 wires	order No.	---	---	---	---
				---	---	---	---
10-30 Vdc	NPN NO	3 wires	order No.	---	---	---	---
				---	---	---	---
10-30 Vdc	NPN NC	3 wires	order No.	---	---	---	---
				---	---	---	---
10-30 Vdc	PNP NO-NC	4 wires	order No.	---	---	---	---
				---	---	---	---
10-30 Vdc	NPN NO-NC	4 wires	order No.	---	---	---	---
				---	---	---	---
10-30 Vdc	NO-NC	2 wires	order No.	---	---	---	---
				---	---	---	---
20-250 Vac/Vdc	NO	2 wires	order No.	---	---	---	---
				---	---	---	---
20-250 Vac/Vdc	NC	2 wires	order No.	---	---	---	---
				---	---	---	---
20-250 Vac	NO	2/3wires	order No.	---	---	---	---
				---	---	---	---
10-30 Vdc	Analog 0-20 mA	3 wires	order No.	---	---	---	---
				---	---	---	---
NAMUR amplifier	NAMUR	2 wires	order No.	IS-18-A20-S2	IS-18-A20-03	IS-18-C20-S2	IS-18-C20-03
				95B064380	95B064360	95B064390	95B064370

Nominal Voltage	7,7 + 9 V DC	7,7 + 9 V DC	7,7 + 9 V DC	7,7 + 9 V DC
Residual Ripple	< 10%	< 10%	< 10%	< 10%
Hysteresis	< 10%	< 10%	< 10%	< 10%
Max. Output Current	< 3 mA (metal absent)	< 3 mA (metal absent)	< 3 mA (metal absent)	< 3 mA (metal absent)
Min. Output Current	< 1 mA (metal present)	< 1 mA (metal present)	< 1 mA (metal present)	< 1 mA (metal present)
Residual Current	---	---	---	---
Voltage Drop	---	---	---	---
Operation Led	---	---	---	---
Switching Frequency	1000 Hz	1000 Hz	1000 Hz	1000 Hz
Start Up Delay	---	---	---	---
Repeatability	< 3%	< 3%	< 3%	< 3%
Short Circuit Protection	Present (self-resetting)	Present (self-resetting)	Present (self-resetting)	Present (self-resetting)
Electric Protection	Against polarity reversal inductive loads	Against polarity reversal inductive loads	Against polarity reversal inductive loads	Against polarity reversal inductive loads
Temperature Limit	(-25 ... +60 °C)	(-25 ... +60 °C)	(-25 ... +60 °C)	(-25 ... +60 °C)
Protection Degree	IP67	IP67	IP67	IP67
Cable Length	---	2 m	---	2 m
Cable Section	---	2 x 0,25 mm²	---	2 x 0,25 mm²
Housing Material	Nickel-plated brass	Nickel-plated brass	Nickel-plated brass	Nickel-plated brass
Active face	LCP	LCP	LCP	LCP
Tightening torque	* see page 5 of the Inductive Sensors Catalog	* see page 5 of the Inductive Sensors Catalog	* see page 5 of the Inductive Sensors Catalog	* see page 5 of the Inductive Sensors Catalog
Weight - Cable Output	---	145g	---	145g
Weight - Connector Output	95g	---	95g	---

NAMUR M30

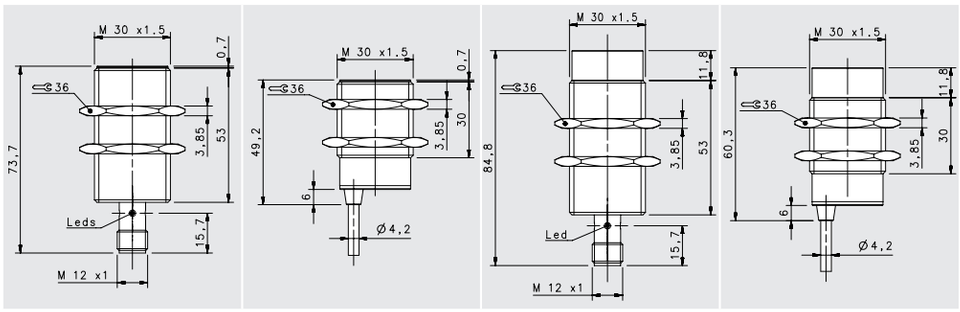

				NAMUR			
				FLUSH		NON FLUSH	
				M12 conn	cable	M12 conn	cable
NOMINAL SWITCHING DISTANCE				**10mm**	**10mm**	**15mm**	**15mm**
10-30 Vdc	PNP/NPN NO-NC	4 wires	order No.	---	---	---	---
				---	---	---	---
10-30 Vdc	PNP NO	3 wires	order No.	---	---	---	---
				---	---	---	---
10-30 Vdc	PNP NC	3 wires	order No.	---	---	---	---
				---	---	---	---
10-30 Vdc	NPN NO	3 wires	order No.	---	---	---	---
				---	---	---	---
10-30 Vdc	NPN NC	3 wires	order No.	---	---	---	---
				---	---	---	---
10-30 Vdc	PNP NO-NC	4 wires	order No.	---	---	---	---
				---	---	---	---
10-30 Vdc	NPN NO-NC	4 wires	order No.	---	---	---	---
				---	---	---	---
10-30 Vdc	NO-NC	2 wires	order No.	---	---	---	---
				---	---	---	---
20-250 Vac/Vdc	NO	2 wires	order No.	---	---	---	---
				---	---	---	---
20-250 Vac/Vdc	NC	2 wires	order No.	---	---	---	---
				---	---	---	---
20-250 Vac	NO	2/3wires	order No.	---	---	---	---
				---	---	---	---
10-30 Vdc	Analog 0-20 mA	3 wires	order No.	---	---	---	---
				---	---	---	---
NAMUR amplifier	NAMUR	2 wires	order No.	IS-30-A20-S2	IS-30-A20-03	IS-30-C20-S2	IS-30-C20-03
				95B064630	95B064610	95B064640	95B064620

Nominal Voltage	7,7 + 9 V DC	7,7 + 9 V DC	7,7 + 9 V DC	7,7 + 9 V DC
Residual Ripple	< 10%	< 10%	< 10%	< 10%
Hysteresis	< 10%	< 10%	< 10%	< 10%
Max. Output Current	< 3 mA (metal absent)	< 3 mA (metal absent)	< 3 mA (metal absent)	< 3 mA (metal absent)
Min. Output Current	< 1 mA (metal present)	< 1 mA (metal present)	< 1 mA (metal present)	< 1 mA (metal present)
Residual Current	---	---	---	---
Voltage Drop	---	---	---	---
Operation Led	---	---	---	---
Switching Frequency	500 Hz	500 Hz	500 Hz	500 Hz
Start Up Delay	---	---	---	---
Repeatability	< 3%	< 3%	< 3%	< 3%
Short Circuit Protection	Present (self-resetting)	Present (self-resetting)	Present (self-resetting)	Present (self-resetting)
Electric Protection	Against polarity reversal inductive loads	Against polarity reversal inductive loads	Against polarity reversal inductive loads	Against polarity reversal inductive loads
Temperature Limit	(-25 ... +60 °C)	(-25 ... +60 °C)	(-25 ... +60 °C)	(-25 ... +60 °C)
Protection Degree	IP67	IP67	IP67	IP67
Cable Length	---	2 m	---	2 m
Cable Section	---	2 x 0,25 mm²	---	2 x 0,25 mm²
Housing Material	Nickel-plated brass	Nickel-plated brass	Nickel-plated brass	Nickel-plated brass
Active face	LCP	LCP	LCP	LCP
Tightening torque	* see page 5 of the Inductive Sensors Catalog	* see page 5 of the Inductive Sensors Catalog	* see page 5 of the Inductive Sensors Catalog	* see page 5 of the Inductive Sensors Catalog
Weight - Cable Output	---	210 g	---	210 g
Weight - Connector Output	170 g	---	170 g	---

2 wires NAMUR

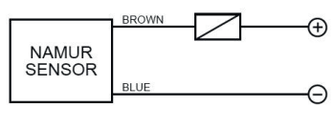

M12 2 wires NAMUR

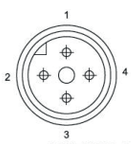

View of quadripole male connector

CONTACTS CONFIGURATION

Available	Contacts numbers			
	1	2	3	4
NAMUR	+		–	

SQUARE

PBT (resin) or Nickel-plated Brass housing
Operating distance 1.5 ... 15 mm
40x40 mm or 8x8 mm dimension
Cable, M8 connector or Terminal Block
2 or 3 wires
PNP, PNP/NPN, NO, NC, NO/NC
IP67

REDUCTION FACTOR

	ALUMINUM (25° C)	STAINLESS STEEL AISI316L	COPPER	BRASS
Average red. Fact.	0,45	0,85	0,4	0,5

*IS-88 models only

SQUARE

SQUARE 40X40

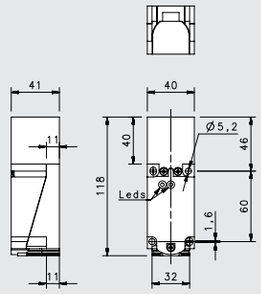

				40X40	
				FLUSH	NON FLUSH
				Terminal Block	Terminal Block
NOMINAL SWITCHING DISTANCE				**15 mm**	**30mm**
10-30 Vdc	PNP/NPN NO-NC	4 wires	order No.	---	---
				---	---
10-30 Vdc	PNP NO	3 wires	order No.	---	---
				---	---
10-30 Vdc	PNP NC	3 wires	order No.	---	---
				---	---
10-30 Vdc	NPN NO	3 wires	order No.	---	---
				---	---
10-30 Vdc	NPN NC	3 wires	order No.	---	---
				---	---
10-30 Vdc	PNP NO-NC	4 wires	order No.	IS-40-W5-S3	IS-40-Y5-S3
				95B065240	95B065280
10-30 Vdc	NPN NO-NC	4 wires	order No.	IS-40-W6-S3	IS-40-Y6-S3
				95B065230	95B065270
10-30 Vdc	NO-NC	2 wires	order No.	---	---
				---	---
20-250 Vac/Vdc	NO	2 wires	order No.	---	---
				---	---
20-250 Vac/Vdc	NC	2 wires	order No.	---	---
				---	---
20-250 Vac	NO	2/3wires	order No.	---	---
				---	---
10-30 Vdc	Analog 0-20 mA	3 wires	order No.	---	---
				---	---
NAMUR amplifier	NAMUR	2 wires	order No.	---	---
				---	---

Nominal Voltage	10-30 Vdc	10-30 Vdc
Residual Ripple	< 10%	< 10%
Hysteresis	< 15% (Sr)	< 15% (Sr)
Max. Output Current	200mA	200mA
Min. Output Current	---	---
Residual Current	< 0,01 mA	< 0,01 mA
Voltage Drop	< 1,5V	< 1,5V
Operation Led	YES	YES
Switching Frequency	100 Hz	100 Hz
Start Up Delay	---	---
Repeatability	< 1.0% (Sr)	< 1.0% (Sr)
Short Circuit Protection	Present (self-resetting)	Present (self-resetting)
Electric Protection	Against polarity reversal inductive loads	Against polarity reversal inductive loads
Temperature Limit	(-25 ...+75C)	(-25 ... +75 °C)
Protection Degree	IP67	IP67
Cable Length	---	---
Cable Section	---	---
Housing Material	PBT (RESIN)	PBT (RESIN)
Weight - Cable Output	---	---
Weight - Connector Output	262g	262g

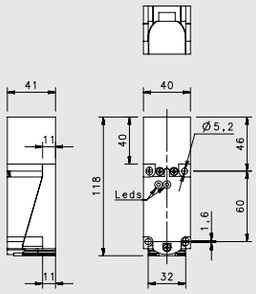

40X40 VAC/VDC	
FLUSH	**NON FLUSH**
Terminal Block	Terminal Block
15 mm	**30mm**
---	---
---	---
---	---
---	---
---	---
---	---
---	---
---	---
---	---
---	---
---	---
---	---
---	---
---	---
---	---
IS-40-W7-S3	IS-40-Y7-S3
95B065250	95B065290
IS-40-W8-S3	IS-40-Y8-S3
95B065260	95B065300
---	---
---	---
---	---
---	---
---	---
---	---
20-250 VAC/Vdc, 50-60 Hz	20-250 VAC/Vdc, 50-60 Hz
< 10%	< 10%
< 15% (Sr)	< 15% (Sr)
200mA	200mA
---	---
< 2,5mA	< 2,5mA
< 10Vac ; < 8Vdc	< 10Vac ; < 8Vdc
YES	YES
25 Hz AC; 40 Hz DC	25 Hz AC; 40 Hz DC
---	---
< 1.0% (Sr)	< 1.0% (Sr)
Present (self-resetting)	Present (self-resetting)
Against polarity reversal inductive loads	Against polarity reversal inductive loads
(-25 ... +70 °C)	(-25 ... +70 °C)
IP67	IP67
---	---
---	---
PBT (RESIN)	PBT (RESIN)
---	---
262g	262g

SQUARE 40X40

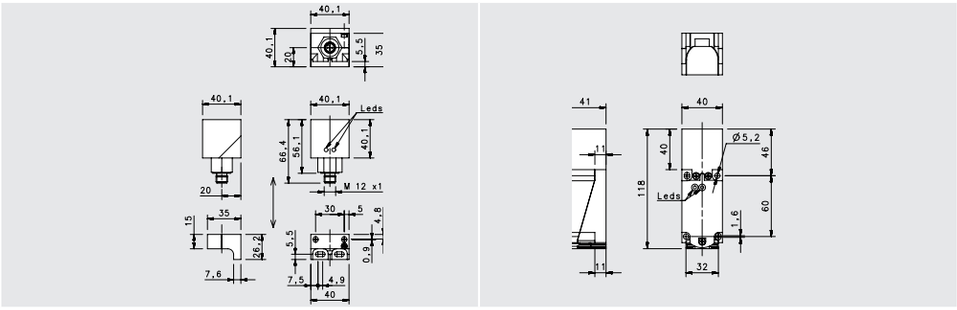

	SHORT	ANALOG OUTPUT
	FLUSH	NON FLUSH
	M12 conn.	Terminal Block
NOMINAL SWITCHING DISTANCE	**15mm**	**7-20mm**
10-30 Vdc PNP/NPN NO-NC 4 wires order No.	---	---
	---	---
10-30 Vdc PNP NO 3 wires order No.	---	---
	---	---
10-30 Vdc PNP NC 3 wires order No.	---	---
	---	---
10-30 Vdc NPN NO 3 wires order No.	---	---
	---	---
10-30 Vdc NPN NC 3 wires order No.	---	---
	---	---
10-30 Vdc PNP NO-NC 4 wires order No.	IS-40-X5-S2	---
	95B065320	---
10-30 Vdc NPN NO-NC 4 wires order No.	IS-40-X6-S2	---
	95B065310	---
10-30 Vdc NO-NC 2 wires order No.	---	---
	---	---
20-250 Vac/Vdc NO 2 wires order No.	---	---
	---	---
20-250 Vac/Vdc NC 2 wires order No.	---	---
	---	---
20-250 Vac NO 2/3wires order No.	---	---
	---	---
10-30 Vdc Analog 0-20 mA 3 wires order No.	---	IS-40-C11-S3
	---	95B065330
NAMUR amplifier NAMUR 2 wires order No.	---	---
	---	---

Nominal Voltage	10-30 Vdc	18-30 Vdc
Residual Ripple	< 10%	< 10%
Hysteresis	< 15% (Sr)	< 10% (Sr)
Max. Output Current	200mA	0-20mA/200 Ω Max.
Min. Output Current	---	---
Residual Current	< 0,01mA	---
Voltage Drop	< 1,5V	---
Operation Led	YES	---
Switching Frequency	100 Hz	100 Hz
Start Up Delay	---	---
Repeatability	< 1.0% (Sr)	0,02 mm
Short Circuit Protection	Present (self-resetting)	Present (self-resetting)
Electric Protection	Against polarity reversal inductive loads	Against polarity reversal inductive loads
Temperature Limit	(-25... +70 °C)	(-25 ... +70 °C)
Protection Degree	IP67	IP67
Cable Length	---	---
Cable Section	---	---
Housing Material	PBT (RESIN)	PBT (RESIN)
Weight - Cable Output	---	---
Weight - Connector Output	170 g	242g

SQUARE 8X8

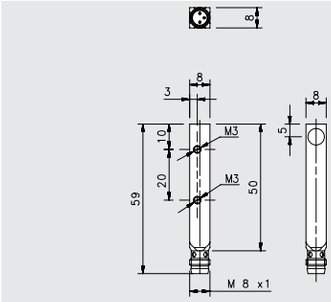

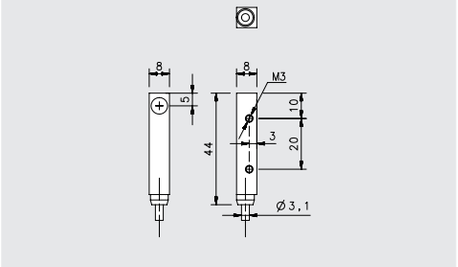

				SHORT	
				FLUSH	
				M8 conn	cable
NOMINAL SWITCHING DISTANCE				**1,5mm**	**1,5mm**
10-30 Vdc	PNP/NPN NO-NC	4 wires	order No.	---	---
				---	---
10-30 Vdc	PNP NO	3 wires	order No.	IS-88-Q1-S1	IS-88-Q1-03
				95B060840	95B060830
10-30 Vdc	PNP NC	3 wires	order No.	---	---
				---	---
10-30 Vdc	NPN NO	3 wires	order No.	---	---
				---	---
10-30 Vdc	NPN NC	3 wires	order No.	---	---
				---	---
10-30 Vdc	PNP NO-NC	4 wires	order No.	---	---
				---	---
10-30 Vdc	NPN NO-NC	4 wires	order No.	---	---
				---	---
10-30 Vdc	NO-NC	2 wires	order No.	---	---
				---	---
20-250 Vac/Vdc	NO	2 wires	order No.	---	---
				---	---
20-250 Vac/Vdc	NC	2 wires	order No.	---	---
				---	---
20-250 Vac	NO	2/3 wires	order No.	---	---
				---	---
10-30 Vdc	Analog 0-20 mA	3 wires	order No.	---	---
				---	---
NAMUR amplifier	NAMUR	2 wires	order No.	---	---
				---	---

Nominal Voltage	10-30 Vdc	10-30 Vdc
Residual Ripple	< 10%	< 10%
Hysteresis	< 10% (Sr)	< 10% (Sr)
Max. Output Current	200mA	200mA
Min. Output Current	---	---
Residual Current	---	---
Voltage Drop	< 1,2V	< 1,2V
Operation Led	Yellow	Yellow
Switching Frequency	500 Hz	500 Hz
Start Up Delay	75 ms	75 ms
Repeatability	< 3%	< 3%
Short Circuit Protection	Present (self-resetting)	Present (self-resetting)
Electric Protection	Against polarity reversal inductive loads	Against polarity reversal inductive loads
Temperature Limit	(-25 ... +70 °C)	(-25 ... +70 °C)
Protection Degree	IP67	IP67
Cable Length	---	2 m
Cable Section	---	3x0,14mm²
Housing Material	nickel-plated brass	nickel-plated brass
Weight - Cable Output	---	80 g
Weight - Connector Output	40 g	---

CAPACITIVE

Capacitive sensors *are noncontact proximity devices suitable for detecting metals, nonmetals, solids, and liquids. The oscillating circuit is influenced by variations in capacity. When any material comes close to the active face, the capacity of the sensor varies and, if the threshold distance is passed, the sensor switches the state of its outputs. Like for the inductive sensors, the operating distance is calculated using a square piece of Fe37, with 1 mm thickness. The variation of the capacitance is due to the conductivity or non-conductivity of the different materials. Conductive materials change the capacitance of the sensor, while non-conductive materials change the dielectric constant of the reference capacitor; the sensor feel the variation of the generated electric field by its active sensing face.*

Datalogic offers a basic range for the Capacitive sensors, M18 and M30 tubular housing, in Direct or Alternated Current, in nickel-plated brass or plastic housing, with timer and sensitivity adjustment trimmer, equipped with the industrial standard outputs, suitable for the most common applications of detection and in the filling level control of the materials.

Nickel plated brass
M18, M30
Basic series (NO-NC)
Capacitive A.C. series (plastic housing)
Multi-voltage series (SPDT relay)
Operating distance: 5...25 mm
Cable or M8 connector
2,4,6 wires
PNP or NPN, N.O. and N.C. outputs, SPDT relay
Delay ON or delay OFF model
IP67 protection

MATERIALS	REDUCTION FACTOR
Metal (Fe37)	1xSn
Water	1xSn
P.V.C.	0.5xSn
Glass	0.5xSn
Wood	0.4xSn

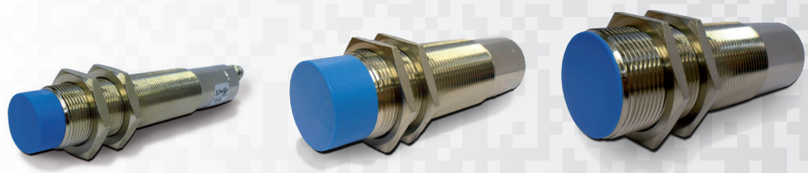

CAPACITIVE

BASIC, CAPACITIVE A.C., MULTIVOLTAGE

CAPACITIVE BASIC M18

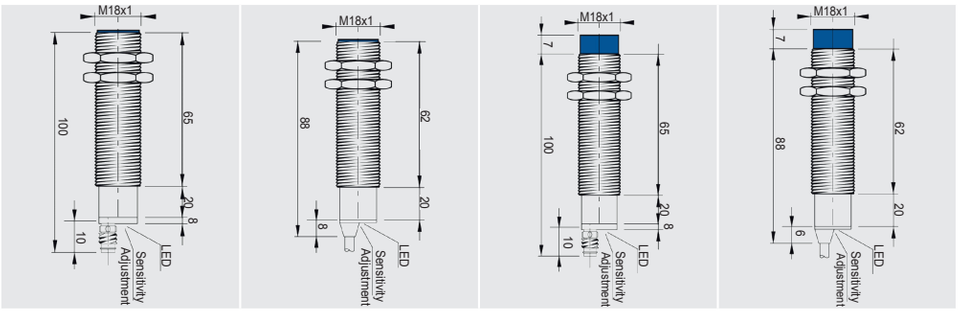

				STANDARD			
				FLUSH		NON FLUSH	
				M8 conn	cable	M8 conn	cable
NOMINAL SWITCHING DISTANCE				**1...5 mm**	**1...5 mm**	**1...10 mm**	**1...10 mm**
10-30 Vdc	PNP/NPN NO-NC	4 wires		---	---	---	---
			order No.	---	---	---	---
10-30 Vdc	PNP NO	3 wires		---	---	---	---
			order No.	---	---	---	---
10-30 Vdc	PNP NC	3 wires		---	---	---	---
			order No.	---	---	---	---
10-30 Vdc	NPN NO	3 wires			---	---	---
			order No.	---	---	---	---
10-30 Vdc	NPN NC	3 wires		---	---	---	---
			order No.	---	---	---	---
10-30 Vdc	PNP NO-NC	4 wires		CS08K2	CS08	CS14K2	CS14
			order No.	958901040	958901020	958901270	958901120
10-30 Vdc	NPN NO-NC	4 wires		CS07K2	CS07	CS13K2	CS13
			order No.	958901000	958901160	958901250	958901100
10-30 Vdc	NO-NC	2 wires		---	---	---	---
			order No.	---	---	---	---
20-250 Vac/Vdc	NO	2 wires		---	---	---	---
			order No.	---	---	---	---
20-250 Vac/Vdc	NC	2 wires		---	---	---	---
			order No.	---	---	---	---
20-250 Vac	NO	2/3wires		---	---	---	---
			order No.	---	---	---	---
10-30 Vdc	Analog 0-20 mA	3 wires		---	---	---	---
			order No.	---	---	---	---
NAMUR amplifier	NAMUR	2 wires		---	---	---	---
			order No.	---	---	---	---

Nominal Voltage	12-30Vdc(-15/10%)	12-30Vdc(-15/10%)	12-30Vdc(-15/10%)	12-30Vdc(-15/10%)
Residual Ripple	<10%	<10%	<10%	<10%
Hysteresis	depends on the sensing distance	depends on the sensing distance	depends on the sensing distance	depends on the sensing distance
Max. Output Current	200 mA	200 mA	200 mA	200 mA
Residual Current	< 10 mA	< 10 mA	< 10 mA	< 10 mA
Voltage Drop	< 1,8 V (I=100 m A)	< 1,8 V (I=100 m A)	< 1,8 V (I=100 m A)	< 1,8 V (I=100 m A)
Setting	sensitivity adjustment trimmer	sensitivity adjustment trimmer	sensitivity adjustment trimmer	sensitivity adjustment trimmer
Operation Led	Yellow	Yellow	Yellow	Yellow
Switching Frequency	10 Hz	10 Hz	10 Hz	10 Hz
Start Up Delay	< 100 ms	< 100 ms	< 100 ms	< 100 ms
Repeatability	≤ 5%	≤ 5%	≤ 5%	≤ 5%
Short Circuit Protection	Present(self-resetting)	Present(self-resetting)	Present(self-resetting)	Present(self-resetting)
Electric Protections	Against polarity reversal inductive loads	Against polarity reversal inductive loads	Against polarity reversal inductive loads	Against polarity reversal inductive loads
Temperature Limits	- 25 +70 C	- 25 +70 C	- 25 +70 C	- 25 +70 C
Protection Degree	IP67	IP67	IP67	IP67
Cable Length	---	2 m	---	2 m
Cable Section	---	4x 0,25 mm^2	---	4x 0,25 mm^2
Housing Material	Nickel-plated brass	Nickel-plated brass	Nickel-plated brass	Nickel-plated brass
Weight - Cable Output	---	160 g	---	160 g
Weight - Connector Output	120 g	---	120 g	---

CAPACITIVE BASIC M30

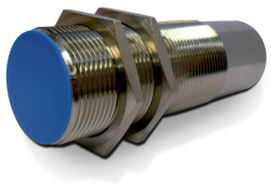

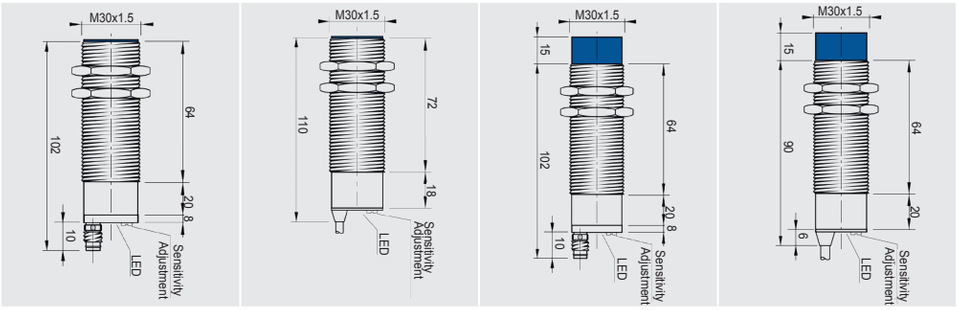

				STANDARD			
				FLUSH		NON FLUSH	
				M8 conn	cable	M8 conn	cable
NOMINAL SWITCHING DISTANCE				**1...15 mm**	**1...15 mm**	**1...25 mm**	**1...25 mm**
10-30 Vdc	PNP/NPN NO-NC	4 wires	order No.	---	---	---	---
				---	---	---	---
10-30 Vdc	PNP NO	3 wires	order No.	---	---	---	---
				---	---	---	---
10-30 Vdc	PNP NC	3 wires	order No.	---	---	---	---
				---	---	---	---
10-30 Vdc	NPN NO	3 wires	order No.		---	---	---
				---	---	---	---
10-30 Vdc	NPN NC	3 wires	order No.	---	---	---	---
				---	---	---	---
10-30 Vdc	PNP NO-NC	4 wires	order No.	CS10K2	CS10	CS16K2	CS16
				958901080	958901060	958901330	958901140
10-30 Vdc	NPN NO-NC	4 wires	order No.	CS09K2	CS09	CS15K2	CS15
				958901230	958901180	958901300	958901200
10-30 Vdc	NO-NC	2 wires	order No.	---	---	---	---
				---	---	---	---
20-250 Vac/Vdc	NO	2 wires	order No.	---	---	---	---
				---	---	---	---
20-250 Vac/Vdc	NC	2 wires	order No.	---	---	---	---
				---	---	---	---
20-250 Vac	NO	2/3wires	order No.	---	---	---	---
				---	---	---	---
10-30 Vdc	Analog 0-20 mA	3 wires	order No.	---	---	---	---
				---	---	---	---
NAMUR amplifier	NAMUR	2 wires	order No.	---	---	---	---
				---	---	---	---

Nominal Voltage	12-30Vdc(-15/10%)	12-30Vdc(-15/10%)	12-30Vdc(-15/10%)	12-30Vdc(-15/10%)
Residual Ripple	<10%	<10%	<10%	<10%
Hysteresis	depends on the sensing distance	depends on the sensing distance	depends on the sensing distance	depends on the sensing distance
Max. Output Current	200 mA	200 mA	200 mA	200 mA
Residual Current	< 10 mA	< 10 mA	< 10 mA	< 10 mA
Voltage Drop	< 1,8 V (I=100 m A)	< 1,8 V (I=100 m A)	< 1,8 V (I=100 m A)	< 1,8 V (I=100 m A)
Setting	sensitivity adjustment trimmer	sensitivity adjustment trimmer	sensitivity adjustment trimmer	sensitivity adjustment trimmer
Operation Led	Yellow	Yellow	Yellow	Yellow
Switching Frequency	10 Hz	10 Hz	10 Hz	10 Hz
Start Up Delay	< 100 ms	< 100 ms	< 100 ms	< 100 ms
Repeatability	≤ 5%	≤ 5%	≤ 5%	≤ 5%
Short Circuit Protection	Present(self-resetting)	Present(self-resetting)	Present(self-resetting)	Present(self-resetting)
Electric Protections	Against polarity reversal inductive loads	Against polarity reversal inductive loads	Against polarity reversal inductive loads	Against polarity reversal inductive loads
Temperature Limits	- 25 +70 C	- 25 +70 C	- 25 +70 C	- 25 +70 C
Protection Degree	IP67	IP67	IP67	IP67
Cable Length	---	2 m	---	2 m
Cable Section	---	4x 0,25 mm^2	---	4x 0,25 mm^2
Housing Material	Nickel-plated brass	Nickel-plated brass	Nickel-plated brass	Nickel-plated brass
Weight - Cable Output	---	250 g	---	250 g
Weight - Connector Output	210 g	---	210 g	---

CAPACITIVE A.C. M18

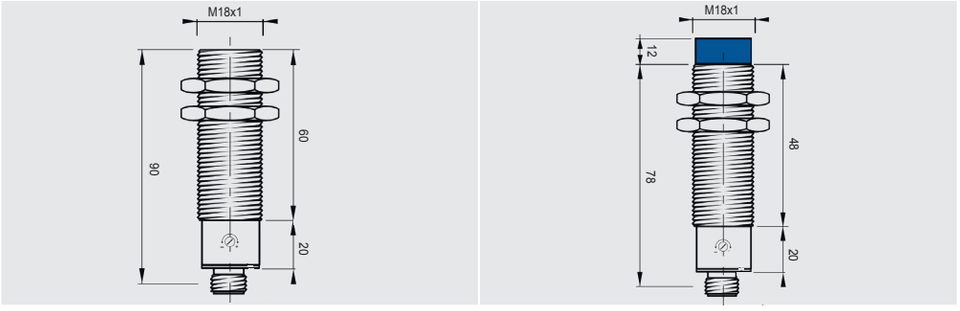

				STANDARD	
				FLUSH	NON FLUSH
				M12 conn	M12 conn
NOMINAL SWITCHING DISTANCE				**2...8 mm**	**2...15 mm**
10-30 Vdc	PNP/NPN NO-NC	4 wires		---	---
			order No.	---	---
10-30 Vdc	PNP NO	3 wires		---	---
			order No.	---	---
10-30 Vdc	PNP NC	3 wires		---	---
			order No.	---	---
10-30 Vdc	NPN NO	3 wires		---	---
			order No.	---	---
10-30 Vdc	NPN NC	3 wires		---	---
			order No.	---	---
10-30 Vdc	PNP NO-NC	4 wires		---	---
			order No.	---	---
10-30 Vdc	NPN NO-NC	4 wires		---	---
			order No.	---	---
10-30 Vdc	NO-NC	2 wires		---	---
			order No.	---	---
20-250 Vac/Vdc	NO	2 wires		CSP40K4	CSP41K4
			order No.	958901380	958901390
20-250 Vac/Vdc	NC	2 wires		---	---
			order No.	---	---
20-250 Vac	NO	2/3wires		---	---
			order No.	---	---
10-30 Vdc	Analog 0-20 mA	3 wires		---	---
			order No.	---	---
NAMUR amplifier	NAMUR	2 wires		---	---
			order No.	---	---

Nominal Voltage	20-250 Vac (-15/10%)-5A source current	20-250 Vac (-15/10%)-5A source current
Residual Ripple	<10%	<10%
Hysteresis	< 15%	< 15%
Max. Output Current	300 mA	300 mA
Min. Output Current	2,5 mA	2,5 mA
Residual Current	< 2,5 mA	< 2,5 mA
Setting	sensitivity adjustment trimmer	sensitivity adjustment trimmer
Operation Led	Yellow	Yellow
Switching Frequency	25 Hz	25 Hz
Start Up Delay	---	---
Repeatability	< 5%	< 5%
Short Circuit Protection	Present(self-resetting)	Present(self-resetting)
Electric Protection	Against polarity reversal inductive loads	Against polarity reversal inductive loads
Temperature Limit	- 25 +70 C	- 25 +70 C
Protection Degree	IP67	IP67
Cable Length	---	---
Cable Section	---	---
Housing Material	Plastic (PBT)	Plastic (PBT)
Weight - Cable Output	---	---
Weight - Connector Output	80 g	80 g

CAPACITIVE A.C. M30

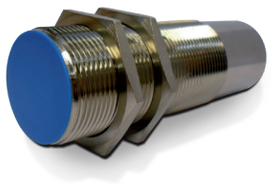

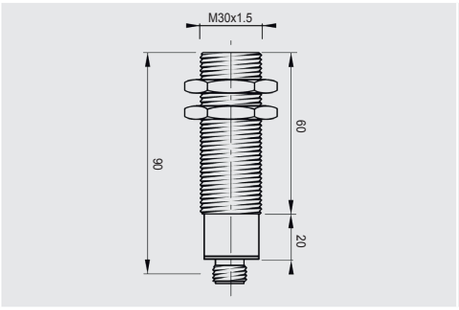

				STANDARD	
				FLUSH	NON FLUSH
				M12 conn	M12 conn
NOMINAL SWITCHING DISTANCE				**2...20 mm**	**2...30 mm**
10-30 Vdc	PNP/NPN NO-NC	4 wires	order No.	---	---
10-30 Vdc	PNP NO	3 wires	order No.	---	---
10-30 Vdc	PNP NC	3 wires	order No.	---	---
10-30 Vdc	NPN NO	3 wires	order No.	---	---
10-30 Vdc	NPN NC	3 wires	order No.	---	---
10-30 Vdc	PNP NO-NC	4 wires	order No.	---	---
10-30 Vdc	NPN NO-NC	4 wires	order No.	---	---
10-30 Vdc	NO-NC	2 wires	order No.	---	---
20-250 Vac/Vdc	NO	2 wires	order No.	CSP50K4	CSP51K4
20-250 Vac/Vdc	NC	2 wires	order No.	958901400	958901410
20-250 Vac	NO	2/3 wires	order No.	---	---
10-30 Vdc	Analog 0-20 mA	3 wires	order No.	---	---
NAMUR amplifier	NAMUR	2 wires	order No.	---	---

Nominal Voltage	20-250 Vac (-15/10%)-5A source current	20-250 Vac (-15/10%)-5A source current
Residual Ripple	<10%	<10%
Hysteresis	< 15%	< 15%
Max. Output Current	300 mA	300 mA
Min. Output Current	2,5 mA	2,5 mA
Residual Current	< 2,5 mA	< 2,5 mA
Setting	sensitivity adjustment trimmer	sensitivity adjustment trimmer
Operation Led	Yellow	Yellow
Switching Frequency	25 Hz	25 Hz
Start Up Delay	---	---
Repeatability	< 5%	< 5%
Short Circuit Protection	Present(self-resetting)	Present(self-resetting)
Electric Protection	Against polarity reversal inductive loads	Against polarity reversal inductive loads
Temperature Limit	- 25 +70 C	- 25 +70 C
Protection Degree	IP67	IP67
Cable Length	---	---
Cable Section	---	---
Housing Material	Plastic (PBT)	Plastic (PBT)
Weight - Cable Output	---	---
Weight - Connector Output	200 g	200 g

CAPACITIVE MULTIVOLTAGE M30

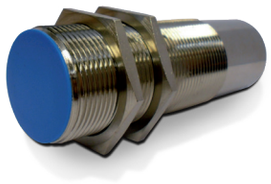

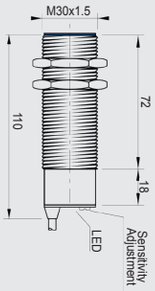

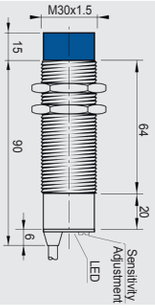

				STANDARD (TIMER TRIMMER)	
				FLUSH	NON FLUSH
				M12 conn	M12 conn
NOMINAL SWITCHING DISTANCE				**20 mm**	**30 mm**
10-30 Vdc	PNP/NPN NO-NC	4 wires	order No.	---	---
				---	---
10-30 Vdc	PNP NO	3 wires	order No.	---	---
				---	---
10-30 Vdc	PNP NC	3 wires	order No.	---	---
				---	---
10-30 Vdc	NPN NO	3 wires	order No.	---	---
				---	---
10-30 Vdc	NPN NC	3 wires	order No.	---	---
				---	---
10-30 Vdc	PNP NO-NC	4 wires	order No.	---	---
				---	---
10-30 Vdc	NPN NO-NC	4 wires	order No.	---	---
				---	---
10-30 Vdc	NO-NC	2 wires	order No.	---	---
				---	---
20-250 Vac/Vdc	NO	2 wires	order No.	---	---
				---	---
18...230 VAC/DC	relay SPDT	6 wires	order No.	CS31	CS32
				958901150	958901220
18...230 Vac/dc	relay SPDT (delay ON)	6 wires	order No.	CS32TD5	CS31TD5
				958901360	958901350
18...230 VAC/DC	relay SPDT (delay OFF)	6 wires	order No.	CS32TE5	CS31TE5
				958901370	958901210
NAMUR amplifier	NAMUR	2 wires	order No.	---	---
				---	---

Nominal Voltage	18-230Vac/dc (-15/10%)	18-230Vac/dc (-15/10%)
Residual Ripple	<10%	<10%
Hysteresis	<10%	<10%
Max. Output Current	3A 30 Vac- 1A 220 Vac (90 W, 360 VA)	3A 30 Vac- 1A 220 Vac (90 W, 360 VA)
Absorption	2,5 VA	2,5 VA
Residual Current	---	---
Setting	sensitivity and time adj. trimmer	sensitivity and time adj. trimmer
Operation Led	Yellow	Yellow
Switching Frequency	10 Hz	10 Hz
Start Up Delay	<300 ms	<300 ms
Repeatability	<5%	<5%
Short Circuit Protection	Present (self-resetting)	Present (self-resetting)
Electric Protection	Against polarity reversal inductive loads	Against polarity reversal inductive loads
Temperature Limit	- 25 +70 C	- 25 +70 C
Protection Degree	IP65	IP65
Cable Length	2 m	2 m
Cable Section	6x0,30 mm²	6x0,30 mm²
Housing Material	Nickel-plated brass	Nickel-plated brass
Weight - Cable Output	250 g	250 g
Weight - Connector Output	---	---

CAPACITIVE SETTINGS & CONNECTIONS

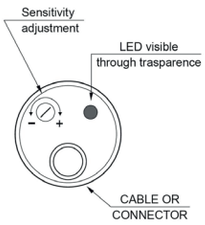

Sensitivity adjustment

The sensitivity adjustment must be done when the sensor is installed in a definite and steady position. The regulation must be done in a position half way between minimum and maximum, because, being air dielectric, a strong humidity variation could cause, if the regulation is very light, nuisance tripping.
The sensing distance of the sensor depends on the materials to detect, on its dimension and conductivity. The distance could change according to temperature variations.

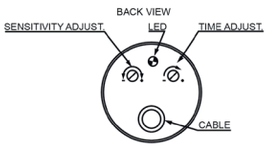

Timer adjustment

The timer trimmer allows to set a delay, on the activation (delay ON) or in the de-activation of the output, depends on the model, after the detection of the object. The output will remain active (or inactive) proportionally to the setting point of the screw, starting from 1 second up to 5 minutes.

M8 4-pole NO-NC models

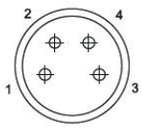

View of quadripole male connector

CONTACTS CONFIGURATION

Output	Contacts numbers			
	1	2	3	4
NPN/PNP NO+NC	+	NC	–	NO

2 wires Vac models

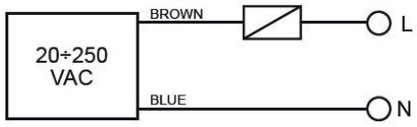

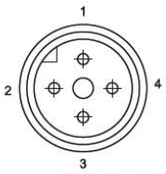

View of quadripole male connector

CONTACTS CONFIGURATION

Available	Contacts numbers			
	1	2	3	4
NO	L		N	

4 wires NO-NC Vdc model

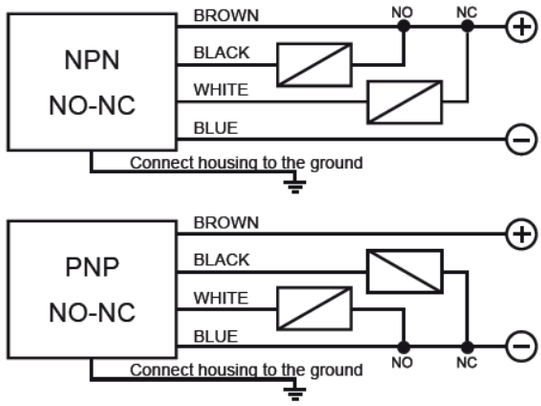

6 wires Mulivoltage models

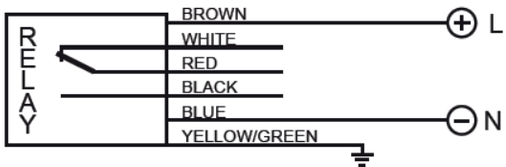

CABLES, CONNECTORS & ACCESSORIES

2, 3, 4 wires
M12, M8 connector
Axial or radial 90°
Shielded or unshielded
Double key
A.C. cable
3, 5, 7, 10, 15, 25m cable

CABLES, CONNECTORS & ACCESSORIES

2 WIRES SENSORS

2 WIRES NO-NC

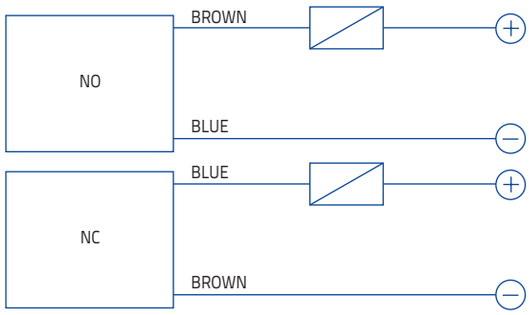

WARNING: The load can be indifferently connected in series to the blue wire or to the brown wire to simulate NPN or PNP functionning logic.

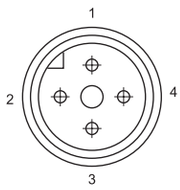

M12 connector

CONTACTS CONFIGURATION				
Available	Contacts numbers			
	1	2	3	4
NO	+		–	
NC	–		+	

INDUCTIVE AC

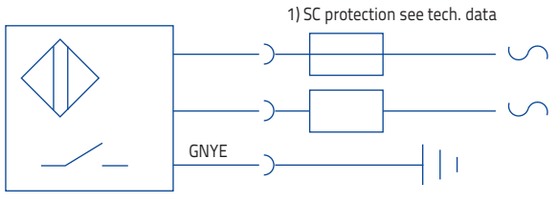

Double key connector for inductive AC sensors

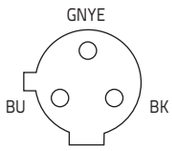

NAMUR

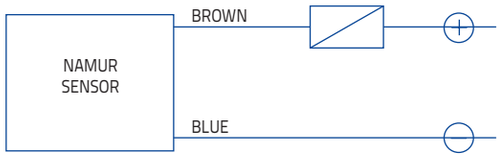

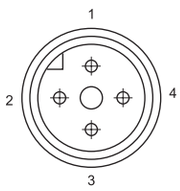

M12 connector

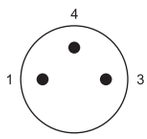

M8 connector

CONTACTS CONFIGURATION				
Available	Contacts numbers			
	1	2	3	4
NAMUR	+		–	

3 WIRES SENSORS

3 WIRES PNP or NPN, NO or NC

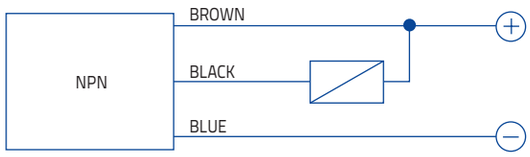

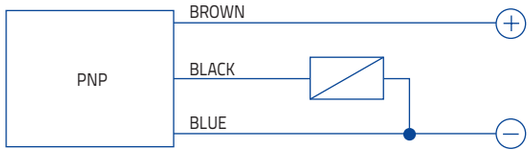

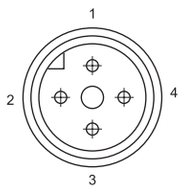

M12 connector

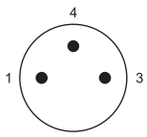

M8 connector

CONTACTS CONFIGURATION				
Available	Contacts numbers			
	1	2	3	4
(NO or NC)	+		–	NO/NC

4 WIRES SENSORS

4 wires (NO+NC)

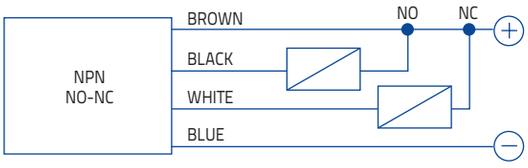

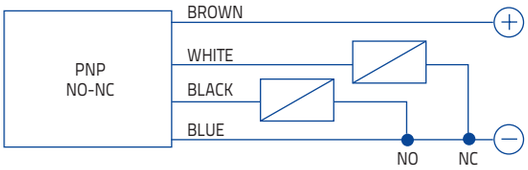

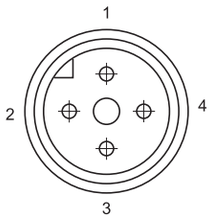

CONTACTS CONFIGURATION				
Output	Contacts numbers			
	1	2	3	4
NO + NC	+	NC	–	NO

4 wires (PNP/NPN, NO/NC)

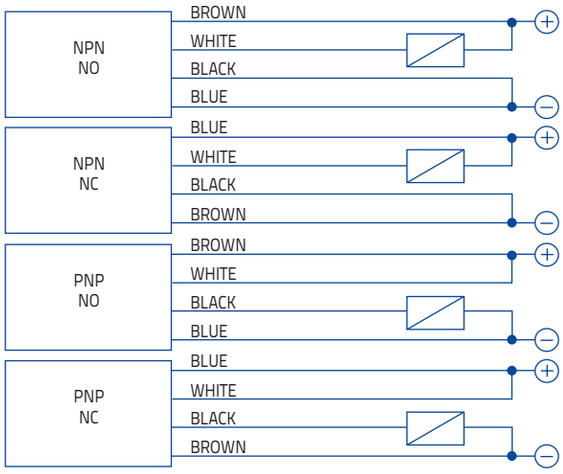

CONTACTS CONFIGURATION				
Output	Contacts numbers			
	1	2	3	4
NPN NO	+	NO	–	–
NPN NC	–	NC	+	–
PNP NO	+	+	–	NO
PNP NC	–	+	+	NC

CONNECTOR & DIRECTION	WIRES	STYLE	CABLE LENGHT	MODEL	ORDER No.
M8					
M8 Connector (Axial)	3	Grey, P.V.C.	3 m	CS-B1-01-G-03	95A251490
			5 m	CS-B1-01-G-05	95A251510
		P.U.R.	2 m	CS-B1-01-R-02	95A251580
			5 m	CS-B1-01-R-05	95A251600
M8 Connector (Radial 90°)	3	Grey, P.V.C.	3 m	CS-B2-01-G-03	95A251500
			5 m	CS-B2-01-G-05	95A251520
		P.U.R.	2 m	CS-B2-01-R-02	95A251590
			5 m	CS-B2-01-R-05	95A251610
M8 Connector (Axial)	4	Grey, P.V.C.	3 m	CS-B1-02-G-03	95A251420
			5 m	CS-B1-02-G-05	95A251430
			7 m	CS-B1-02-G-07	95A251440
			10 m	CS-B1-02-G-10	95A251480
		P.U.R.	2 m	CS-B1-02-R-02	95A251620
			5 m	CS-B1-02-R-05	95A251640
		OIL resistant (CEI 2034-01)	5 m	CS-B1-02-O-05	95A251730
			10 m	CS-B1-02-O-10	95A251100
M8 Connector (Radial 90°)	4	Grey, PVC	3 m	CS-B2-02-G-03	95A251450
			5 m	CS-B2-02-G-05	95A251460
			7 m	CS-B2-02-G-07	95A251470
			10 m	CS-B2-02-G-10	95A251530
		P.U.R.	2 m	CS-B2-02-R-02	95A251630
			5 m	CS-B2-02-R-05	95A251650
		OIL resistant (CEI 2034-01)	5 m	CS-B2-02-O-05	95A251720
			10 m	CS-B2-02-O-10	95A251110
M12					
M12 Connector (Axial)	3	Grey, P.V.C.	3 m	CS-A1-01-G-03	95A251290
			5 m	CS-A1-01-G-05	95A251300
			7 m	CS-A1-01-G-07	95A251320
			10 m	CS-A1-01-G-10	95A251340
M12 Connector (Radial 90°)	3	Grey, P.V.C.	3 m	CS-A2-01-G-03	95A251200
			5 m	CS-A2-01-G-05	95A251210
			7 m	CS-A2-01-G-07	95A251220
			10 m	CS-A2-01-G-10	95A251230
		OIL resistant (CEI 2034-01)	3 m	CS-A2-01-O-03	95A251660
			5 m	CS-A2-01-O-05	95A251670
			10 m	CS-A2-01-O-10	95A251680
M12 Connector with LED (for PNP N.O. sensors) (Radial 90°)	3	Grey, P.V.C.	5 m	CS-A2-11-G-05	95A251310
			10 m	CS-A2-11-G-10	95A251330
Shielded M12 Connector (Axial)	3	Grey, P.V.C.	10 m	CV-A1-21-G-10	95ACC2060
M12 Connector Axial Double Keyd + PE for AC inductive	3	Orange, P.V.C.	2 m	CS-A1-21-R-02	95ACC8000
			3 m	CS-A1-21-R-03	95ACC8010
			5 m	CS-A1-21-R-05	95ACC8020
M12 Connector (Axial)	4	Grey, P.V.C.	3 m	CS-A1-02-G-03	95A251380
			5 m	CS-A1-02-G-05	95A251270
			7 m	CS-A1-02-G-07	95A251280
			10 m	CS-A1-02-G-10	95A251390
		P.U.R.	2 m	CS-A1-02-R-02	95A251540
			5 m	CS-A1-02-R-05	95A251560
M12 Connector (Radial 90°)	4	Grey, P.V.C.	3 m	CS-A2-02-G-03	95A251360
			5 m	CS-A2-02-G-05	95A251240
			7 m	CS-A2-02-G-07	95A251245
			10 m	CS-A2-02-G-10	95A251260
		P.U.R.	2 m	CS-A2-02-R-02	95A251550
			5 m	CS-A2-02-R-05	95A251570
		OIL resistant (CEI 2034-01)	5 m	CS-A2-02-O-05	95A251690
			10 m	CS-A2-02-O-10	95A251700
M12 Connector with LED (for PNP N.O. sensors) (Radial 90°)	4	Grey, P.V.C.	3 m	CS-A2-12-G-03	95A251400
			5 m	CS-A2-12-G-05	95A251350
			10 m	CS-A2-12-G-10	95A251370

Shielded M12 Connector (Axial)	4	Black, P.V.C.	3 m	CV-A1-22-B-03	95ACC1480
			5 m	CV-A1-22-B-05	95ACC1490
			10 m	CV-A1-22-B-10	95ACC1500
			15 m	CV-A1-22-B-15	95ACC2070
			25 m	CV-A1-22-B-25	95ACC2090
Shielded M12 Connector (Radial 90°)	4	Black, P.V.C.	3 m	CV-A2-22-B-03	95ACC1540
			5 m	CV-A2-22-B-05	95ACC1550
			10 m	CV-A2-22-B-10	95ACC1560
M12 Connector (Axial)	4	U.L., Black, P.V.C.	3 m	CS-A1-02-U-03	95ASE1120
			5 m	CS-A1-02-U-05	95ASE1130
			10 m	CS-A1-02-U-10	95ASE1140
			15 m	CS-A1-02-U-15	95ASE1150
			25 m	CS-A1-02-U-25	95ASE1160
CONNECTOR (not cabled)					
M12 Connector (Axial)	4	Black	Connector- not cabled	CS-A1-02-B-NC	G5085002
M12 Connector (Radial 90°)	4	Black	Connector- not cabled	CS-A2-02-B-NC	G5085003

CONNECTOR

RADIAL M12

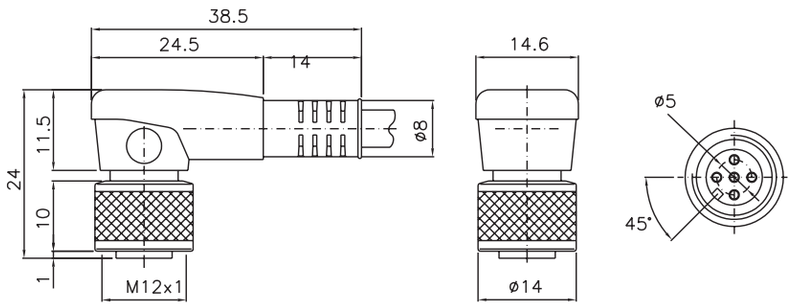

AXIAL M12

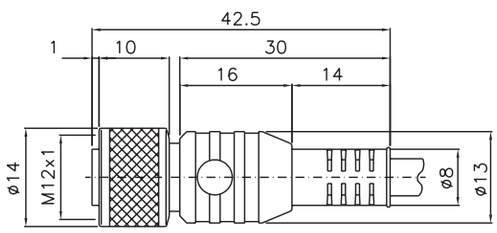

RADIAL M8

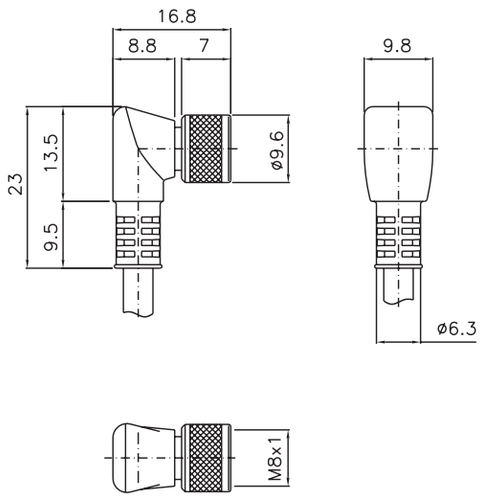

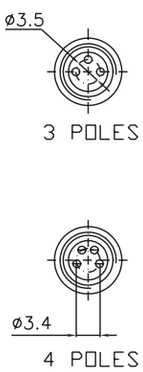

AXIAL M8

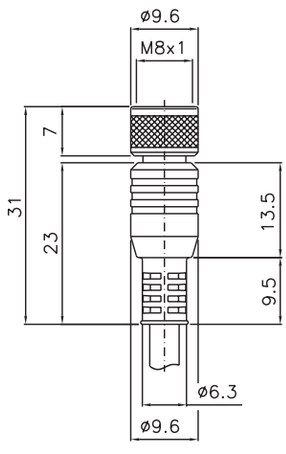

ACCESSORIES SELECTION AND ORDER INFORMATION

CONNECTOR	TYPE	MATERIAL	CODING	ORDER No.
M12	fixing bracket	Stainless Steel	ST1218	95ACC3340
M18	fixing bracket	Stainless Steel	ST1218	95ACC3340
M30	fixing bracket	Stainless Steel	ST1830	95ACC3350

ST1830

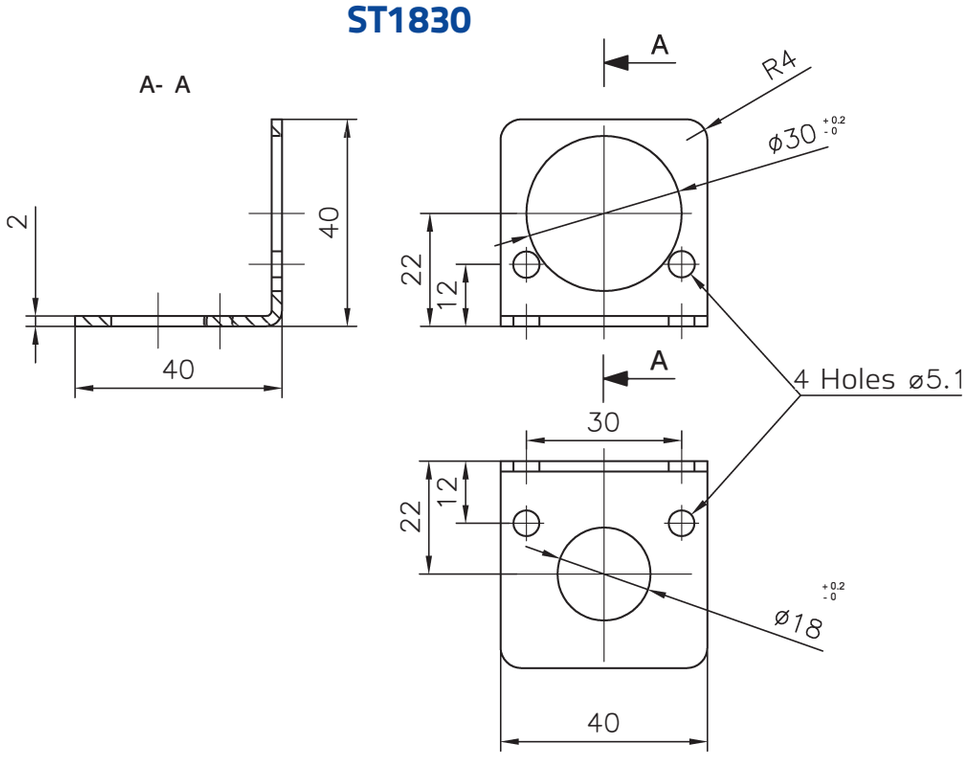

ST1218

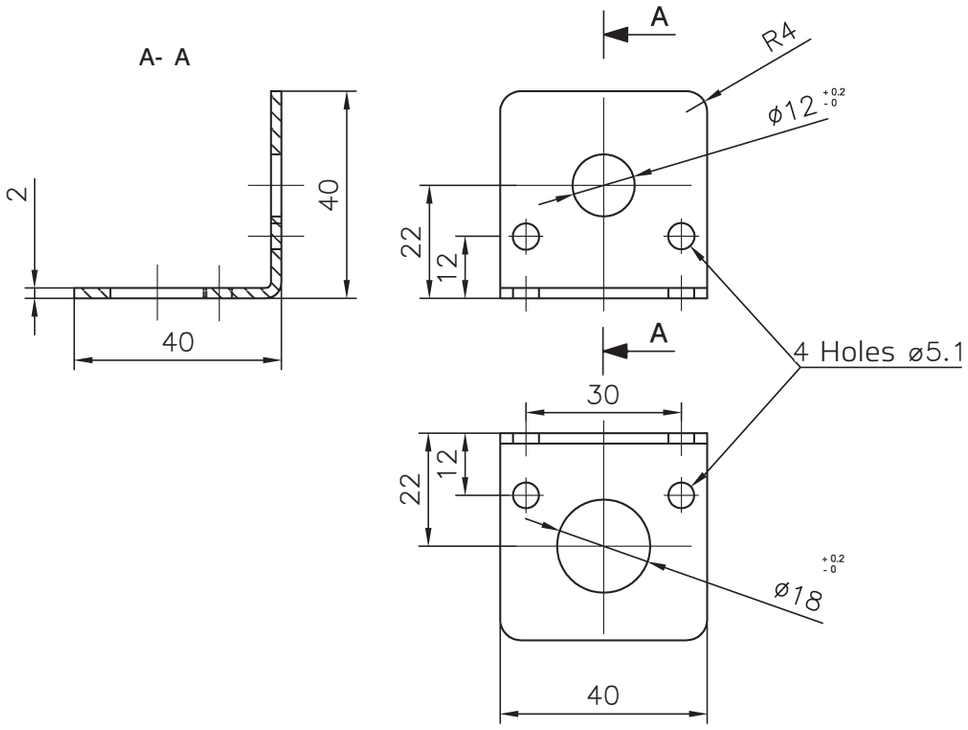

mm

INDEX

INDUCTIVE

M4, M5, M6,5			
SENSOR	**Order No.**	**Category**	**Pag.**
IS-04-A1-03	95B061011	STAINLESS STEEL	34
IS-04-A3-03	95B061001	STAINLESS STEEL	34
IS-05-A1-03	95B061041	BASIC	35
IS-05-A1-S1	95B061051	BASIC	35
IS-05-A20-03	95B065410	NAMUR	62
IS-05-A3-03	95B061021	BASIC	35
IS-05-A3-S1	95B061031	BASIC	35
IS-05-A4-03	95B065420	BASIC	35
IS-05-E3-03	95B065400	BASIC	35
IS-65-A1-03	95B064730	BASIC	10
IS-65-A1-S1	95B066050	BASIC	10
IS-65-A20-03	95B066290	NAMUR	63
IS-65-A20-S1	95B066310	NAMUR	63
IS-65-A2-03	95B064770	BASIC	10
IS-65-A2-S1	95B066090	BASIC	10
IS-65-A3-03	95B064650	BASIC	10
IS-65-A3-S1	95B064970	BASIC	10
IS-65-A4-03	95B064690	BASIC	10
IS-65-A4-S1	95B066010	BASIC	10
IS-65-B1-03	95B064750	BASIC	11
IS-65-B1-S1	95B066070	BASIC	11
IS-65-B2-03	95B064790	BASIC	11
IS-65-B2-S1	95B066110	BASIC	11
IS-65-B3-03	95B064670	BASIC	11
IS-65-B3-S1	95B064990	BASIC	11
IS-65-B4-03	95B064710	BASIC	11
IS-65-B4-S1	95B066030	BASIC	11
IS-65-C1-03	95B064890	BASIC	10
IS-65-C1-S1	95B066210	BASIC	10
IS-65-C20-03	95B066300	NAMUR	63
IS-65-C20-S1	95B066320	NAMUR	63
IS-65-C2-03	95B064930	BASIC	10
IS-65-C2-S1	95B066250	BASIC	10
IS-65-C3-03	95B064810	BASIC	10
IS-65-C3-S1	95B066130	BASIC	10
IS-65-C4-03	95B064850	BASIC	10
IS-65-C4-S1	95B066170	BASIC	10
IS-65-D1-03	95B064910	BASIC	11
IS-65-D1-S1	95B066230	BASIC	11
IS-65-D2-03	95B064950	BASIC	11
IS-65-D2-S1	95B066270	BASIC	11
IS-65-D3-03	95B064830	BASIC	11
IS-65-D3-S1	95B066150	BASIC	11
IS-65-D4-03	95B064870	BASIC	11
IS-65-D4-S1	95B066190	BASIC	11
IS-65-G1-03	95B064740	BASIC	12
IS-65-G1-S1	95B066060	BASIC	12
IS-65-G2-03	95B064780	BASIC	12
IS-65-G2-S1	95B066100	BASIC	12
IS-65-G3-03	95B064660	BASIC	12
IS-65-G3-S1	95B064980	BASIC	12
IS-65-G4-03	95B064700	BASIC	12
IS-65-G4-S1	95B066020	BASIC	12
IS-65-H1-03	95B064900	BASIC	13
IS-65-H1-S1	95B066220	BASIC	13
IS-65-H2-03	95B064940	BASIC	13
IS-65-H2-S1	95B066260	BASIC	13
IS-65-H3-03	95B064820	BASIC	13
IS-65-H3-S1	95B066140	BASIC	13
IS-65-H4-03	95B064860	BASIC	13
IS-65-H4-S1	95B066180	BASIC	13
IS-65-M1-03	95B064760	STAINLESS STEEL	36
IS-65-M1-S1	95B066080	STAINLESS STEEL	36
IS-65-M2-03	95B064800	STAINLESS STEEL	36
IS-65-M2-S1	95B066120	STAINLESS STEEL	36
IS-65-M3-03	95B064680	STAINLESS STEEL	36
IS-65-M3-S1	95B066000	STAINLESS STEEL	36
IS-65-M4-03	95B064720	STAINLESS STEEL	36
IS-65-M4-S1	95B066040	STAINLESS STEEL	36
IS-65-N1-03	95B064920	STAINLESS STEEL	37
IS-65-N1-S1	95B066240	STAINLESS STEEL	37
IS-65-N2-03	95B064960	STAINLESS STEEL	37
IS-65-N2-S1	95B066280	STAINLESS STEEL	37
IS-65-N3-03	95B064840	STAINLESS STEEL	37
IS-65-N3-S1	95B066160	STAINLESS STEEL	37
IS-65-N4-03	95B064880	STAINLESS STEEL	37
IS-65-N4-S1	95B066200	STAINLESS STEEL	37

M8			
SENSOR	**Order No.**	**Category**	**Pag.**
IS-08-A1-03	95B061121	BASIC	14
IS-08-A1-S1	95B061141	BASIC	14
IS-08-A1-S2	95B061131	BASIC	14
IS-08-A20-03	95B066740	NAMUR	64
IS-08-A20-03	95B066760	NAMUR	64
IS-08-A20-S1	95B066780	NAMUR	64
IS-08-A2-03	95B061151	BASIC	14
IS-08-A2-S1	95B061171	BASIC	14
IS-08-A2-S2	95B061161	BASIC	14
IS-08-A3-03	95B061061	BASIC	14
IS-08-A3-S1	95B061081	BASIC	14
IS-08-A3-S2	95B061071	BASIC	14
IS-08-A4-03	95B061091	BASIC	14
IS-08-A4-S1	95B061111	BASIC	14
IS-08-A4-S2	95B061101	BASIC	14
IS-08-B1-03	95B061921	BASIC	16
IS-08-B1-S1	95B066860	BASIC	16
IS-08-B1-S2	95B066590	BASIC	16
IS-08-B2-03	95B061951	BASIC	16
IS-08-B2-S1	95B066890	BASIC	16
IS-08-B2-S2	95B066620	BASIC	16
IS-08-B3-03	95B061861	BASIC	16
IS-08-B3-S1	95B066810	BASIC	16
IS-08-B3-S2	95B066530	BASIC	16
IS-08-B4-03	95B061891	BASIC	16
IS-08-B4-S1	95B066830	BASIC	16
IS-08-B4-S2	95B066560	BASIC	16
IS-08-C1-03	95B061521	BASIC	15
IS-08-C1-S1	95B061541	BASIC	15
IS-08-C1-S2	95B061531	BASIC	15
IS-08-C20-03	95B066750	NAMUR	65
IS-08-C20-S1	95B066790	NAMUR	65
IS-08-C20-S2	95B066770	NAMUR	65
IS-08-C2-03	95B061551	BASIC	15
IS-08-C2-S1	95B061571	BASIC	15
IS-08-C2-S2	95B061561	BASIC	15
IS-08-C3-03	95B066410	BASIC	15
IS-08-C3-S1	95B061481	BASIC	15
IS-08-C3-S2	95B061471	BASIC	15
IS-08-C4-03	95B066450	BASIC	15
IS-08-C4-S1	95B061511	BASIC	15
IS-08-C4-S2	95B061501	BASIC	15
IS-08-D1-03	95B062321	BASIC	17
IS-08-D1-S1	95B066970	BASIC	17
IS-08-D1-S2	95B066700	BASIC	17
IS-08-D2-03	95B062351	BASIC	17
IS-08-D2-S1	95B067000	BASIC	17
IS-08-D2-S2	95B066720	BASIC	17
IS-08-D3-03	95B066430	BASIC	17
IS-08-D3-S1	95B066920	BASIC	17
IS-08-D3-S2	95B066650	BASIC	17
IS-08-D4-03	95B062291	BASIC	17
IS-08-D4-S1	95B066940	BASIC	17
IS-08-D4-S2	95B066670	BASIC	17
IS-08-G1-03	95B066370	BASIC	18
IS-08-G1-S1	95B066850	BASIC	18
IS-08-G1-S2	95B066580	BASIC	18
IS-08-G2-03	95B066390	BASIC	18
IS-08-G2-S1	95B066880	BASIC	18
IS-08-G2-S2	95B066610	BASIC	18

IS-08-G3-03	95B066330	BASIC	18
IS-08-G3-S1	95B066800	BASIC	18
IS-08-G3-S2	95B066520	BASIC	18
IS-08-G4-03	95B066350	BASIC	18
IS-08-G4-S1	95B063131	BASIC	18
IS-08-G4-S2	95B066550	BASIC	18
IS-08-H1-03	95B066480	BASIC	19
IS-08-H1-S1	95B066960	BASIC	19
IS-08-H1-S2	95B066690	BASIC	19
IS-08-H2-03	95B066500	BASIC	19
IS-08-H2-S1	95B066990	BASIC	19
IS-08-H2-S2	95B063301	BASIC	19
IS-08-H3-03	95B066420	BASIC	19
IS-08-H3-S1	95B066910	BASIC	19
IS-08-H3-S2	95B066640	BASIC	19
IS-08-H4-03	95B066460	BASIC	19
IS-08-H4-S1	95B063251	BASIC	19
IS-08-H4-S2	95B063241	BASIC	19
IS-08-M1-03	95B066380	STAINLESS STEEL	38
IS-08-M1-S1	95B066870	STAINLESS STEEL	38
IS-08-M1-S2	95B066600	STAINLESS STEEL	38
IS-08-M2-03	95B066400	STAINLESS STEEL	38
IS-08-M2-S1	95B066900	STAINLESS STEEL	38
IS-08-M2-S2	95B066630	STAINLESS STEEL	38
IS-08-M3-03	95B066340	STAINLESS STEEL	38
IS-08-M3-S1	95B066820	STAINLESS STEEL	38
IS-08-M3-S2	95B066540	STAINLESS STEEL	38
IS-08-M4-03	95B066360	STAINLESS STEEL	38
IS-08-M4-S1	95B066840	STAINLESS STEEL	38
IS-08-M4-S2	95B066570	STAINLESS STEEL	38
IS-08-N1-03	95B066490	STAINLESS STEEL	39
IS-08-N1-S1	95B066980	STAINLESS STEEL	39
IS-08-N1-S2	95B066710	STAINLESS STEEL	39
IS-08-N2-03	95B066510	STAINLESS STEEL	39
IS-08-N2-S1	95B067010	STAINLESS STEEL	39
IS-08-N2-S2	95B066730	STAINLESS STEEL	39
IS-08-N3-03	95B066440	STAINLESS STEEL	39
IS-08-N3-S1	95B066930	STAINLESS STEEL	39
IS-08-N3-S2	95B066660	STAINLESS STEEL	39
IS-08-N4-03	95B066470	STAINLESS STEEL	39
IS-08-N4-S1	95B066950	STAINLESS STEEL	39
IS-08-N4-S2	95B066680	STAINLESS STEEL	39

M12

SENSOR	Order No.	Category	Pag.
IS-12-A0-03	95B064030	BASIC	20
IS-12-A0-S2	95B064060	BASIC	20
IS-12-A1-03	95B061241	BASIC	20
IS-12-A1-S2	95B061251	BASIC	20
IS-12-A15-03	95B060680	INDUCTIVE AC	56
IS-12-A15-S2	95B060690	INDUCTIVE AC	56
IS-12-A20-03	95B064160	NAMUR	66
IS-12-A20-S2	95B064180	NAMUR	66
IS-12-A2-03	95B061271	BASIC	20
IS-12-A2-S2	95B061281	BASIC	20
IS-12-A3-03	95B061181	BASIC	20
IS-12-A3-S2	95B061191	BASIC	20
IS-12-A4-03	95B061211	BASIC	20
IS-12-A4-S2	95B061221	BASIC	20
IS-12-A9-03	95B064100	BASIC	20
IS-12-A9-S2	95B063931	BASIC	20
IS-12-B1-03	95B062041	BASIC	21
IS-12-B1-S2	95B062051	BASIC	21
IS-12-B2-03	95B062071	BASIC	21
IS-12-B2-S2	95B062081	BASIC	21
IS-12-B3-03	95B061981	BASIC	21
IS-12-B3-S2	95B061991	BASIC	21
IS-12-B4-03	95B062011	BASIC	21
IS-12-B4-S2	95B062021	BASIC	21
IS-12-C0-03	95B064040	BASIC	20
IS-12-C0-S2	95B064080	BASIC	20
IS-12-C1-03	95B061641	BASIC	20
IS-12-C1-S2	95B061651	BASIC	20
IS-12-C20-03	95B064170	NAMUR	66
IS-12-C20-S2	95B064190	NAMUR	66
IS-12-C2-03	95B061671	BASIC	20
IS-12-C2-S2	95B061681	BASIC	20
IS-12-C3-03	95B061581	BASIC	20
IS-12-C3-S2	95B061591	BASIC	20
IS-12-C4-03	95B061611	BASIC	20
IS-12-C4-S2	95B061621	BASIC	20
IS-12-C9-03	95B064110	BASIC	20
IS-12-C9-S2	95B064140	BASIC	20
IS-12-D1-03	95B062441	BASIC	21
IS-12-D1-S2	95B062451	BASIC	21
IS-12-D2-03	95B062471	BASIC	21
IS-12-D2-S2	95B062481	BASIC	21
IS-12-D3-03	95B062381	BASIC	21
IS-12-D3-S2	95B062391	BASIC	21
IS-12-D4-03	95B062411	BASIC	21
IS-12-D4-S2	95B062421	BASIC	21
IS-12-E0-03	95B067190	BASIC	22
IS-12-E0-S2	95B067230	BASIC	22
IS-12-E1-03	95B067670	BASIC	22
IS-12-E1-S2	95B067030	BASIC	22
IS-12-E2-03	95B067680	BASIC	22
IS-12-E2-S2	95B067640	BASIC	22
IS-12-E3-03	95B067690	BASIC	22
IS-12-E3-S2	95B067650	BASIC	22
IS-12-E4-03	95B067700	BASIC	22
IS-12-E4-S2	95B067660	BASIC	22
IS-12-E9-03	95B067200	BASIC	22
IS-12-E9-S2	95B067240	BASIC	22
IS-12-F1-03	95B067740	BASIC	22
IS-12-F1-S2	95B067020	BASIC	22
IS-12-F0-03	95B067210	BASIC	22
IS-12-F0-S2	95B067250	BASIC	22
IS-12-F2-03	95B067750	BASIC	22
IS-12-F2-S2	95B067710	BASIC	22
IS-12-F3-03	95B067760	BASIC	22
IS-12-F3-S2	95B067720	BASIC	22
IS-12-F4-03	95B067770	BASIC	22
IS-12-F4-S2	95B067730	BASIC	22
IS-12-F9-03	95B067220	BASIC	22
IS-12-F9-S2	95B067260	BASIC	22
IS-12-G1-03	95B063361	BASIC	23
IS-12-G1-S2	95B063371	BASIC	23
IS-12-G2-03	95B063381	BASIC	23
IS-12-G2-S2	95B063391	BASIC	23
IS-12-G3-03	95B063321	BASIC	23
IS-12-G3-S2	95B063331	BASIC	23
IS-12-G4-03	95B063341	BASIC	23
IS-12-G4-S2	95B063351	BASIC	23
IS-12-G5-03	95B062681	BASIC	23
IS-12-G5-S2	95B062691	BASIC	23
IS-12-G6-03	95B062661	BASIC	23
IS-12-G6-S2	95B062671	BASIC	23
IS-12-H1-03	95B063441	BASIC	23
IS-12-H1-S2	95B063451	BASIC	23
IS-12-H2-03	95B063461	BASIC	23
IS-12-H2-S2	95B063471	BASIC	23
IS-12-H3-03	95B063401	BASIC	23
IS-12-H3-S2	95B063411	BASIC	23
IS-12-H4-03	95B063421	BASIC	23
IS-12-H4-S2	95B063431	BASIC	23
IS-12-H5-03	95B062761	BASIC	23
IS-12-H5-S2	95B062771	BASIC	23
IS-12-H6-03	95B062741	BASIC	23
IS-12-H6-S2	95B062751	BASIC	23
IS-12-I1-S2	95B065340	METAL FACE	48
IS-12-L1-S2	95B063871	METAL FACE	48
IS-12-M1-S2	95B060240	STAINLESS STEEL	40
IS-12-M2-S2	95B060250	STAINLESS STEEL	40
IS-12-M3-S2	95B060260	STAINLESS STEEL	40
IS-12-M4-S2	95B060270	STAINLESS STEEL	40
IS-12-N1-S2	95B060280	STAINLESS STEEL	40
IS-12-N2-S2	95B060290	STAINLESS STEEL	40
IS-12-N3-S2	95B060300	STAINLESS STEEL	40

INDEX

IS-12-N4-S2	95B060310	STAINLESS STEEL	40
IS-12-O1-S2	95B060000	STAINLESS STEEL	41
IS-12-O2-S2	95B060010	STAINLESS STEEL	41
IS-12-O3-S2	95B060020	STAINLESS STEEL	41
IS-12-O4-S2	95B060030	STAINLESS STEEL	41
IS-12-P1-S2	95B060040	STAINLESS STEEL	41
IS-12-P2-S2	95B060050	STAINLESS STEEL	41
IS-12-P3-S2	95B060060	STAINLESS STEEL	41
IS-12-P4-S2	95B060070	STAINLESS STEEL	41
IS-12-P4-S2	95B060070	STAINLESS STEEL	41
IS-F12-S1-S2	95B065360	WELD FIELD IMMUNE	52
IS-F12-T1-S2	95B065370	WELD FIELD IMMUNE	52

M18

SENSOR	Order No.	Category	Pag.
IS-18-A0-03	95B064230	BASIC	24
IS-18-A0-S2	95B064260	BASIC	24
IS-18-A1-03	95B061341	BASIC	24
IS-18-A1-S2	95B061351	BASIC	24
IS-18-A15-03	95B060770	INDUCTIVE AC	57
IS-18-A15-S2	95B060780	INDUCTIVE AC	57
IS-18-A20-03	95B064360	NAMUR	67
IS-18-A20-S2	95B064380	NAMUR	67
IS-18-A2-03	95B061361	BASIC	24
IS-18-A2-S2	95B061371	BASIC	24
IS-18-A3-03	95B061301	BASIC	24
IS-18-A3-S2	95B061311	BASIC	24
IS-18-A4-03	95B061321	BASIC	24
IS-18-A4-S2	95B061331	BASIC	24
IS-18-A9-03	95B064300	BASIC	24
IS-18-A9-S2	95B063941	BASIC	24
IS-18-B1-03	95B062141	BASIC	25
IS-18-B1-S2	95B062151	BASIC	25
IS-18-B2-03	95B062161	BASIC	25
IS-18-B2-S2	95B062171	BASIC	25
IS-18-B3-03	95B062101	BASIC	25
IS-18-B3-S2	95B062111	BASIC	25
IS-18-B4-03	95B062121	BASIC	25
IS-18-B4-S2	95B062131	BASIC	25
IS-18-C0-03	95B064240	BASIC	24
IS-18-C0-S2	95B064280	BASIC	24
IS-18-C1-03	95B061741	BASIC	24
IS-18-C1-S2	95B061751	BASIC	24
IS-18-C20-03	95B064370	NAMUR	67
IS-18-C20-S2	95B064390	NAMUR	67
IS-18-C2-03	95B061761	BASIC	24
IS-18-C2-S2	95B061771	BASIC	24
IS-18-C3-03	95B061701	BASIC	24
IS-18-C3-S2	95B061711	BASIC	24
IS-18-C4-03	95B061721	BASIC	24
IS-18-C4-S2	95B061731	BASIC	24
IS-18-C9-03	95B064310	BASIC	24
IS-18-C9-S2	95B064340	BASIC	24
IS-18-D1-03	95B062541	BASIC	25
IS-18-D1-S2	95B062551	BASIC	25
IS-18-D2-03	95B062561	BASIC	25
IS-18-D2-S2	95B062571	BASIC	25
IS-18-D3-03	95B062501	BASIC	25
IS-18-D3-S2	95B062511	BASIC	25
IS-18-D4-03	95B062521	BASIC	25
IS-18-D4-S2	95B062531	BASIC	25
IS-18-E1-S2	95B067050	BASIC	26
IS-18-E0-03	95B067270	BASIC	26
IS-18-E0-S2	95B067310	BASIC	26
IS-18-E1-03	95B067810	BASIC	26
IS-18-E2-03	95B067820	BASIC	26
IS-18-E2-S2	95B067780	BASIC	26
IS-18-E3-03	95B067830	BASIC	26
IS-18-E3-S2	95B067790	BASIC	26
IS-18-E4-03	95B067840	BASIC	26
IS-18-E4-S2	95B067800	BASIC	26
IS-18-E9-03	95B067280	BASIC	26
IS-18-E9-S2	95B067320	BASIC	26
IS-18-F0-03	95B067290	BASIC	26
IS-18-F0-S2	95B067330	BASIC	26
IS-18-F1-03	95B067880	BASIC	26
IS-18-F1-S2	95B067040	BASIC	26
IS-18-F2-03	95B067890	BASIC	26
IS-18-F2-S2	95B067850	BASIC	26
IS-18-F3-03	95B067900	BASIC	26
IS-18-F3-S2	95B067860	BASIC	26
IS-18-F4-03	95B067910	BASIC	26
IS-18-F4-S2	95B067870	BASIC	26
IS-18-F9-03	95B067300	BASIC	26
IS-18-F9-S2	95B067340	BASIC	26
IS-18-G1-03	95B063521	BASIC	27
IS-18-G1-S2	95B063531	BASIC	27
IS-18-G2-03	95B063541	BASIC	27
IS-18-G2-S2	95B063551	BASIC	27
IS-18-G3-03	95B063061	BASIC	27
IS-18-G3-S2	95B063491	BASIC	27
IS-18-G4-03	95B063501	BASIC	27
IS-18-G4-S2	95B063511	BASIC	27
IS-18-G5-03	95B062721	BASIC	27
IS-18-G5-S2	95B062731	BASIC	27
IS-18-G6-03	95B064200	BASIC	27
IS-18-G6-S2	95B062711	BASIC	27
IS-18-H1-03	95B063601	BASIC	27
IS-18-H1-S2	95B063611	BASIC	27
IS-18-H2-03	95B063621	BASIC	27
IS-18-H2-S2	95B063631	BASIC	27
IS-18-H3-03	95B063561	BASIC	27
IS-18-H3-S2	95B063571	BASIC	27
IS-18-H4-03	95B063581	BASIC	27
IS-18-H4-S2	95B063591	BASIC	27
IS-18-H5-03	95B064220	BASIC	27
IS-18-H5-S2	95B062811	BASIC	27
IS-18-H6-03	95B064210	BASIC	27
IS-18-H6-S2	95B062791	BASIC	27
IS-18-I1-S2	95B065350	METAL FACE	49
IS-18-L1-S2	95B063881	METAL FACE	49
IS-18-M1-S2	95B060320	STAINLESS STEEL	42
IS-18-M2-S2	95B060330	STAINLESS STEEL	42
IS-18-M3-S2	95B060340	STAINLESS STEEL	42
IS-18-M4-S2	95B060350	STAINLESS STEEL	42
IS-18-N1-S2	95B060360	STAINLESS STEEL	42
IS-18-N2-S2	95B060370	STAINLESS STEEL	42
IS-18-N3-S2	95B060380	STAINLESS STEEL	42
IS-18-N4-S2	95B060390	STAINLESS STEEL	42
IS-18-O1-S2	95B060080	STAINLESS STEEL	43
IS-18-O2-S2	95B060090	STAINLESS STEEL	43
IS-18-O3-S2	95B060100	STAINLESS STEEL	43
IS-18-O4-S2	95B060110	STAINLESS STEEL	43
IS-18-P1-S2	95B060120	STAINLESS STEEL	43
IS-18-P2-S2	95B060130	STAINLESS STEEL	43
IS-18-P3-S2	95B060140	STAINLESS STEEL	43
IS-18-P4-S2	95B060150	STAINLESS STEEL	43
IS-F18-S1-S2	95B065380	WELD FIELD IMMUNE	53
IS-F18-T1-S2	95B065390	WELD FIELD IMMUNE	53

M30

SENSOR	Order No.	Category	Pag.
IS-30-A0-03	95B064460	BASIC	28
IS-30-A0-S2	95B064490	BASIC	28
IS-30-A1-03	95B061421	BASIC	28
IS-30-A1-S2	95B061431	BASIC	28
IS-30-A15-03	95B060810	INDUCTIVE AC	58
IS-30-A15-S2	95B060820	INDUCTIVE AC	58
IS-30-A20-03	95B064610	NAMUR	68
IS-30-A20-S2	95B064630	NAMUR	68
IS-30-A2-03	95B061441	BASIC	28
IS-30-A2-S2	95B061451	BASIC	28
IS-30-A3-03	95B061381	BASIC	28
IS-30-A3-S2	95B061391	BASIC	28
IS-30-A4-03	95B061401	BASIC	28
IS-30-A4-S2	95B061411	BASIC	28
IS-30-A9-03	95B064530	BASIC	28

IS-30-A9-S2	95B064570	BASIC	28
IS-30-B1-03	95B062221	BASIC	29
IS-30-B1-S2	95B062231	BASIC	29
IS-30-B2-03	95B062241	BASIC	29
IS-30-B2-S2	95B062251	BASIC	29
IS-30-B3-03	95B062181	BASIC	29
IS-30-B3-S2	95B062191	BASIC	29
IS-30-B4-03	95B062201	BASIC	29
IS-30-B4-S2	95B062211	BASIC	29
IS-30-C0-03	95B064470	BASIC	28
IS-30-C0-S2	95B064510	BASIC	28
IS-30-C1-03	95B061821	BASIC	28
IS-30-C1-S2	95B061831	BASIC	28
IS-30-C20-03	95B064620	NAMUR	68
IS-30-C20-S2	95B064640	NAMUR	68
IS-30-C2-03	95B061841	BASIC	28
IS-30-C2-S2	95B061851	BASIC	28
IS-30-C3-03	95B061781	BASIC	28
IS-30-C3-S2	95B061791	BASIC	28
IS-30-C4-03	95B061801	BASIC	28
IS-30-C4-S2	95B061811	BASIC	28
IS-30-C9-03	95B064550	BASIC	28
IS-30-C9-S2	95B064590	BASIC	28
IS-30-D1-03	95B062621	BASIC	29
IS-30-D1-S2	95B062631	BASIC	29
IS-30-D2-03	95B062641	BASIC	29
IS-30-D2-S2	95B062651	BASIC	29
IS-30-D3-03	95B062581	BASIC	29
IS-30-D3-S2	95B062591	BASIC	29
IS-30-D4-03	95B062601	BASIC	29
IS-30-D4-S2	95B062611	BASIC	29
IS-30-E0-03	95B067350	BASIC	30
IS-30-E0-S2	95B067390	BASIC	30
IS-30-E1-03	95B067950	BASIC	30
IS-30-E1-S2	95B067060	BASIC	30
IS-30-E2-03	95B067960	BASIC	30
IS-30-E2-S2	95B067920	BASIC	30
IS-30-E3-03	95B067970	BASIC	30
IS-30-E3-S2	95B067930	BASIC	30
IS-30-E4-03	95B067980	BASIC	30
IS-30-E4-S2	95B067940	BASIC	30
IS-30-E9-03	95B067360	BASIC	30
IS-30-E9-S2	95B067400	BASIC	30
IS-30-F0-03	95B067370	BASIC	30
IS-30-F0-S2	95B067410	BASIC	30
IS-30-F1-03	95B068030	BASIC	30
IS-30-F1-S2	95B067990	BASIC	30
IS-30-F2-03	95B068040	BASIC	30
IS-30-F2-S2	95B068000	BASIC	30
IS-30-F3-03	95B068050	BASIC	30
IS-30-F3-S2	95B068010	BASIC	30
IS-30-F4-03	95B068060	BASIC	30
IS-30-F4-S2	95B068020	BASIC	30
IS-30-F9-03	95B067380	BASIC	30
IS-30-F9-S2	95B067420	BASIC	30
IS-30-G1-03	95B063681	BASIC	31
IS-30-G1-S2	95B063691	BASIC	31
IS-30-G2-03	95B063701	BASIC	31
IS-30-G2-S2	95B063711	BASIC	31
IS-30-G3-03	95B063641	BASIC	31
IS-30-G3-S2	95B063651	BASIC	31
IS-30-G4-03	95B063661	BASIC	31
IS-30-G4-S2	95B063671	BASIC	31
IS-30-G5-03	95B063821	BASIC	31
IS-30-G5-S2	95B063831	BASIC	31
IS-30-G6-03	95B064400	BASIC	31
IS-30-G6-S2	95B064430	BASIC	31
IS-30-H1-03	95B063761	BASIC	31
IS-30-H1-S2	95B063771	BASIC	31
IS-30-H2-03	95B063781	BASIC	31
IS-30-H2-S2	95B063791	BASIC	31
IS-30-H3-03	95B063721	BASIC	31
IS-30-H3-S2	95B063731	BASIC	31
IS-30-H4-03	95B063741	BASIC	31
IS-30-H4-S2	95B063751	BASIC	31
IS-30-H5-03	95B064420	BASIC	31
IS-30-H5-S2	95B064450	BASIC	31
IS-30-H6-03	95B064410	BASIC	31
IS-30-H6-S2	95B064440	BASIC	31
IS-30-M1-S2	95B060400	STAINLESS STEEL	44
IS-30-M2-S2	95B060410	STAINLESS STEEL	44
IS-30-M3-S2	95B060420	STAINLESS STEEL	44
IS-30-M4-S2	95B060430	STAINLESS STEEL	44
IS-30-N1-S2	95B060440	STAINLESS STEEL	44
IS-30-N2-S2	95B060450	STAINLESS STEEL	44
IS-30-N3-S2	95B060460	STAINLESS STEEL	44
IS-30-N4-S2	95B060470	STAINLESS STEEL	44
IS-30-O1-S2	95B060160	STAINLESS STEEL	45
IS-30-O2-S2	95B060170	STAINLESS STEEL	45
IS-30-O3-S2	95B060180	STAINLESS STEEL	45
IS-30-O4-S2	95B060190	STAINLESS STEEL	45
IS-30-P1-S2	95B060200	STAINLESS STEEL	45
IS-30-P2-S2	95B060210	STAINLESS STEEL	45
IS-30-P3-S2	95B060220	STAINLESS STEEL	45
IS-30-P4-S2	95B060230	STAINLESS STEEL	45

SQUARE

SENSOR	Order No.	Category	Pag.
IS-40-C11-S3	95B065330	SQUARE	74
IS-40-W5-S3	95B065240	SQUARE	72
IS-40-W6-S3	95B065230	SQUARE	72
IS-40-W7-S3	95B065250	SQUARE	73
IS-40-W8-S3	95B065260	SQUARE	73
IS-40-X5-S2	95B065320	SQUARE	74
IS-40-X6-S2	95B065310	SQUARE	74
IS-40-Y5-S3	95B065280	SQUARE	72
IS-40-Y6-S3	95B065270	SQUARE	72
IS-40-Y7-S3	95B065290	SQUARE	73
IS-40-Y8-S3	95B065300	SQUARE	73
IS-88-Q1-03	95B060830	SQUARE	75
IS-88-Q1-S1	95B060840	SQUARE	75

CAPACITIVE

M18

SENSOR	Order No.	Category	Pag.
CS08K2	958901040	basic	78
CS07K2	958901000	basic	78
CS08	958901020	basic	78
CS07	958901160	basic	78
CS14K2	958901270	basic	78
CS13K2	958901250	basic	78
CS14	958901120	basic	78
CS13	958901100	basic	78
CSP40K4	958901380	Capacitve A.C.	80
CSP41K4	958901390	Capacitve A.C.	80

M30

SENSOR	Order No.	Category	Pag.
CS10K2	958901080	basic	79
CS10	958901060	basic	79
CS16K2	958901330	basic	79
CS16	958901140	basic	79
CS09K2	958901230	basic	79
CS09	958901180	basic	79
CS15K2	958901300	basic	79
CS15	958901200	basic	79
CSP50K4	958901400	Capacitve A.C.	81
CSP51K4	958901410	Capacitve A.C.	81
CS31	958901150	Multi-voltage (timer)	82
CS32	958901220	Multi-voltage (timer)	82
CS31TD5	958901350	Multi-voltage (timer)	82
CS32TD5	958901360	Multi-voltage (timer)	82
CS31TE5	958901210	Multi-voltage (timer)	82
CS32TE5	958901370	Multi-voltage (timer)	82

NOTE

NOTE

DATALOGIC
THE VISION IS YOURS

www.datalogic.com

Rev. 11, 11/2016
9C513700E

Product and Company names and logos referenced may be either trademarks or registered trademarks of their respective companies. We reserve the right to make modifications and improvements.