SLM/SLG SERIES

BRUSHLESS AC OR DC SERVO MOTOR / INTEGRATED SERVO GEARMOTOR

Compatible with virtually any manufacturer's servo drive

Multiple frame size options

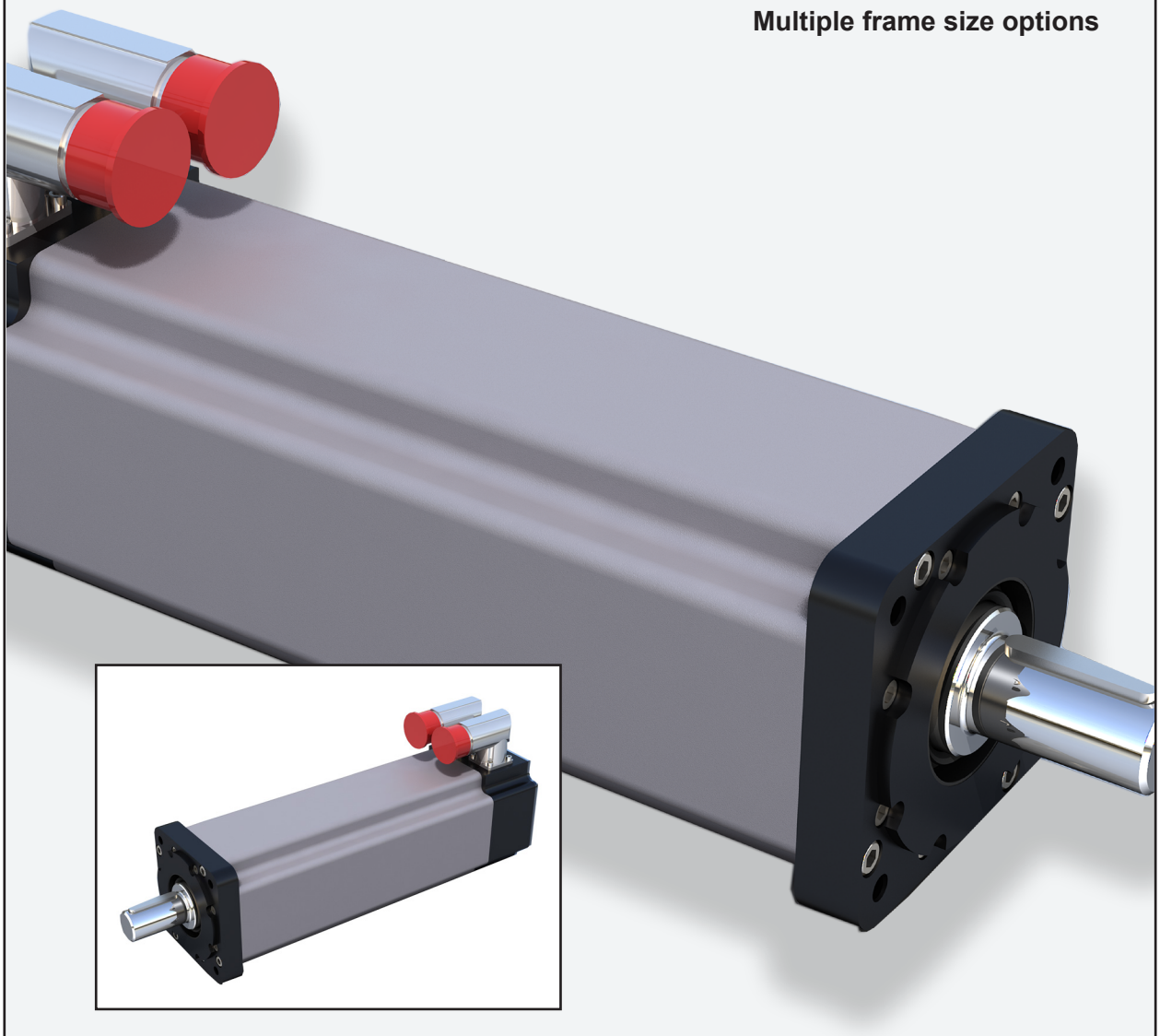

SLM Series Motors and SLG Series Integrated Gearmotors

Description

Brushless servo motor and gearmotor technology from Exlar provides one of the highest torque-to-size ratio available in motion control today. Small size, outstanding performance specifications, quality and customization capabilities offer you the right solution for your motion control application.

Unique T-LAM Stator Design Advantage

This innovative design offers several advantages over traditional motor winding for a more efficient and powerful motor.

Built for durability, T-LAM segmented lamination stator technology consists of individual segments, each containing individual phase wiring for maximum motor performance. The robust insulation, high coercive strength magnets, and complete thermal potting provide a more robust motor design, a design yielding a 35 to 70% torque increase in the same package size! T-LAM motor designs have Class 180H insulation systems and UL recognition.

Standard Features	
SLM Motor	IP65S sealing
	Right angle rotatable connectors.
	Feedback configurations for nearly all servo amplifiers
	Anodized housings
	Class 180H insulation system
SLG Gearmotor	All features of SLM motor shown above plus…
	High side load bearing design
	Integrated armature and sungear
	Higher stiffness than bolt-on gearhead and motor
	10 arc minute standard backlash, single stage; 13 arc minute standard backlash, dual stage
	Single and double reduction ratios: 4:1, 5:1, 10:1, 16:1, 20:1, 25:1, 40:1, 50:1, and 100:1

Very High Torque Density

T-LAM technology produces an efficient and powerful motor in a very small package.

- 60 mm SLM060 offers continuous torque up to 15 lbf-in and base speed of 5000 rpm.
- 75 mm SLM075 offers continuous torque up to 36 lbf-in and base speed of 4000 rpm.
- 90 mm SLM090 offers continuous torque up to 56 lbf-in and base speed of 4000 rpm.
- 115 mm SLM115 offers continuous torque up to 176 lbf-in and base speed of 3000 rpm.
- 142 mm SLM142 offers continuous torque up to 237 lbf-in and base speed of 2400 rpm.
- 180 mm SLM180 offers continuous torque up to 612 lbf-in and base speed of 2400 rpm.

Product Features

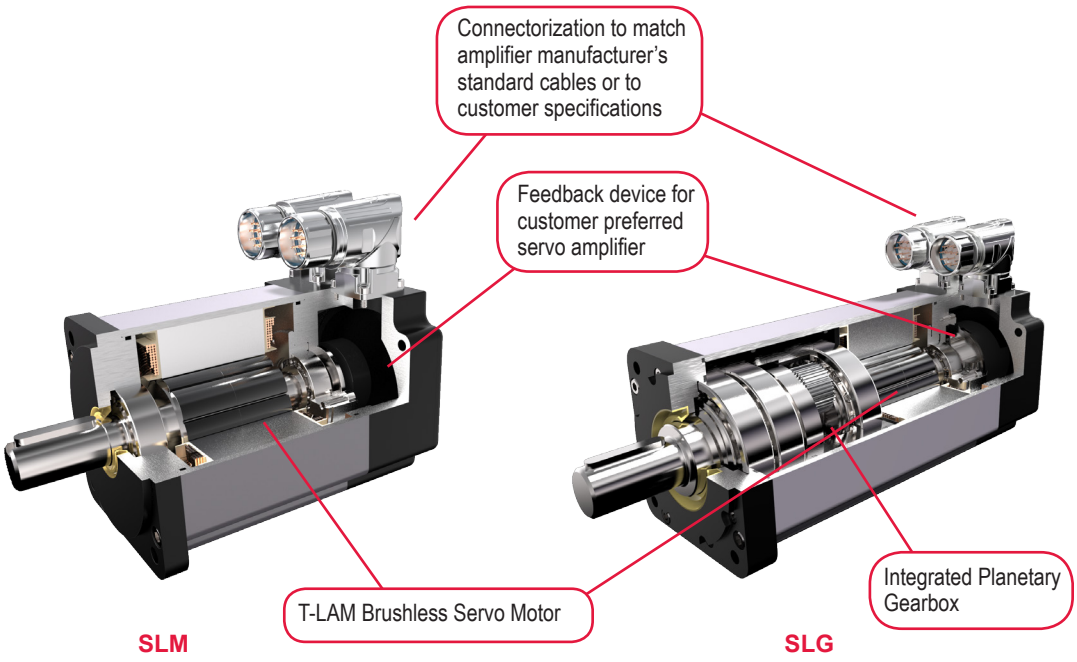

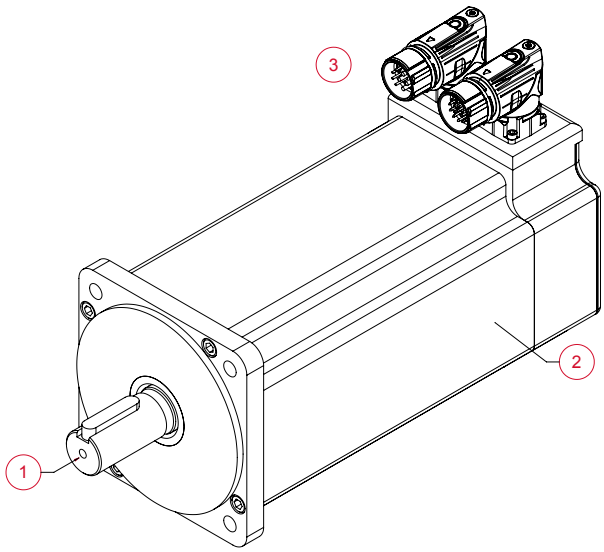

1 - Keyed
2 - Rear Brake
3 - Exlar standard M23 style

Industries and Applications

Automotive
- Automotive Assembly

Food Processing
- Conveyor Drives
- Packaging
- Labeling

Machining
- Machine tools
- Fluid Handling
- Winding Machines
- Screw Drives

Entertainment / Simulation
- Simulation robotics
- Animatronics

Medical Equipment
- Volumetric pumps

Material Handling
- Tensioning
- Parts Handling
- Web Feed
- Stage Positioning
- Glass Manufacturing

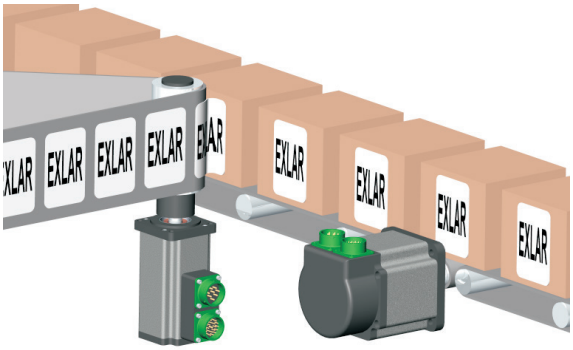

Exlar brushless motors are the highest performance with very compact size. This makes them perfect for high-speed labeling and demanding conveyor drive applications.

Exlar closed-loop, servo-controlled rotary actuators are ideal for operating quarter-turn, full-turn, or multi-turn valves or shaft driven dampers.

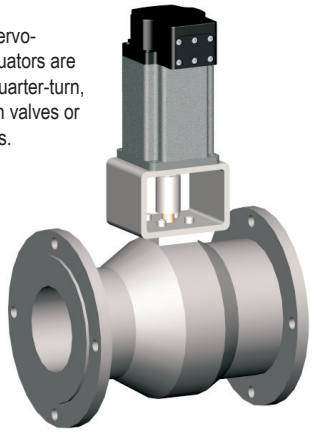

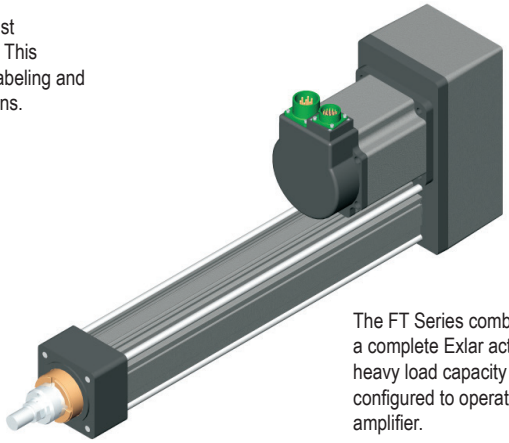

The FT Series combined with SLM/G Series motors provides a complete Exlar actuator solution for applications requiring heavy load capacity and high speeds. The motor can be configured to operate with nearly any manufacturer's servo amplifier.

Electrical and Mechanical Specifications

SLM/SLG060

Motor Stator		118	138	158	168	218	238	258	268	318	338	358	368
Voltage Rating	Vrms	115	230	400	460	115	230	400	460	115	230	400	460
Speed @ Bus Voltage	rpm	5000											
RMS SINUSOIDAL COMMUTATION DATA													
Continuous Motor Torque	lbf-in	7.6	7.3	7.0	7.0	11.9	11.5	11.0	11.3	15.0	15.3	14.6	14.9
	Nm	0.86	0.83	0.79	0.79	1.34	1.30	1.25	1.28	1.70	1.73	1.65	1.69
Peak Motor Torque	lbf-in	15.2	14.7	14.0	14.0	23.8	23.0	22.1	22.6	30.0	30.6	29.2	29.9
	Nm	1.72	1.66	1.58	1.58	2.69	2.60	2.49	2.55	3.39	3.46	3.30	3.38
Torque Constant (Kt) (+/– 10% @ 25˚C)	lbf-in/A	2.5	5.2	7.5	9.5	2.5	5.2	8.6	10.1	2.5	5.3	8.8	10.1
	Nm/A	0.28	0.6	0.9	1.1	0.3	0.6	1.0	1.1	0.3	0.6	1.0	1.1
Continuous Current Rating	A	3.4	1.6	1.0	0.8	5.4	2.5	1.4	1.2	6.6	3.2	1.9	1.6
Peak Current Rating	A	6.9	3.1	2.0	1.6	10.8	4.9	2.9	2.5	13.2	6.5	3.7	3.3
O-PK SINUSOIDAL COMMUTATION DATA													
Continuous Motor Torque	lbf-in	7.6	7.3	7.0	7.0	11.9	11.5	11.0	11.3	15.0	15.3	14.6	14.9
	Nm	0.86	0.83	0.79	0.79	1.34	1.30	1.25	1.28	1.70	1.73	1.65	1.69
Peak Motor Torque	lbf-in	15.2	14.7	14.0	14.0	23.8	23.0	22.1	22.6	30.0	30.6	29.2	29.9
	Nm	1.72	1.66	1.58	1.58	2.69	2.60	2.49	2.55	3.39	3.46	3.30	3.38
Torque Constant (Kt) (+/– 10% @ 25˚C)	lbf-in/A	1.7	3.7	5.3	6.7	1.7	3.7	6.1	7.2	1.8	3.7	6.2	7.2
	Nm/A	0.20	0.4	0.6	0.8	0.2	0.4	0.7	0.8	0.2	0.4	0.7	0.8
Continuous Current Rating	A	4.9	2.2	1.5	1.2	7.6	3.5	2.0	1.8	9.4	4.6	2.6	2.3
Peak Current Rating	A	9.7	4.5	2.9	2.3	15.2	7.0	4.1	3.5	18.7	9.2	5.3	4.7
MOTOR DATA													
Voltage Constant (Ke) (+/– 10% @ 25˚C)	Vrms/Krpm	16.9	35.5	51.5	64.8	16.9	35.5	58.6	69.3	17.3	36.0	59.9	69.3
	Vpk/Krpm	23.9	50.2	72.8	91.7	23.9	50.2	82.9	98.0	24.5	50.9	84.8	98.0
Pole Configuration		8	8	8	8	8	8	8	8	8	8	8	8
Resistance (L-L)(+/– 5% @ 25˚C)	Ohms	2.6	12.52	28.82	45.79	1.11	5.26	15.51	20.69	0.76	3.14	9.57	12.22
Inductance (L-L)(+/– 15%)	mH	4.6	21.4	47.9	68.3	2.5	10.2	28.3	39.5	1.7	7.4	18.5	27.4
SLM Armature Inertia (+/– 5%)	bf-in-sec ^{2}	0.000237				0.000413				0.000589			
	Kg-cm^2	0.268				0.466				0.665			
Brake Inertia	lbf-in-sec^2	0.00012				0.000120				0.000120			
	Kg-cm^2	0.135				0.135				0.135			
Brake Current @ 24 VDC	A	0.33				0.33				0.33			
Brake Holding Torque	lbf-in	19				19				19			
	Nm	2.2				2.2				2.2			
Brake Engage/Disengage Time	ms	14/28				14/28				14/28			
Mechanical Time Constant (tm)	ms	2.20	2.38	2.60	2.61	1.62	1.74	1.89	1.80	1.50	1.45	1.59	1.52
Electrical Time Constant (te)	ms	1.76	1.71	1.66	1.49	2.24	1.95	1.82	1.91	2.27	2.36	1.93	2.24
Friction Torque	lbf-in (Nm)	0.27 (0.031)				0.34 (0.038)				0.38 (0.043)			
Insulation Class		180 (H)											
Insulation System Volt Rating	Vrms	460											
Environmental Rating		IP65S											

For amplifiers using peak sinusoidal ratings, multiply RMS sinusoidal Kt by 0.707 and current by 1.414.

Gearmotor Data

	1 Stack Motor		2 Stack Motor		3 Stack Motor	
SLG Armature Inertia* lbf-in-sec^2 (Kg-cm^2)	0.000226 (0.255)		0.000401 (0.453)		0.000576 (0.651)	
GEARING REFLECTED INERTIA	SINGLE REDUCTION			DOUBLE REDUCTION		
	Gear Stages	lbf-in-sec^2	(Kg-cm^2)	Gear Stages	lbf-in-sec^2	(Kg-cm^2)
	4:1	0.0000132	(0.0149)	16:1	0.0000121	(0.0137)
	5:1	0.0000087	(0.00984)	20:1, 25:1	0.0000080	(0.00906)
	10:1	0.0000023	(0.00261)	40:1, 50:1, 100:1	0.0000021	(0.00242)
Backlash at 1% rated torque	10 Arc minutes Efficiency: Single reduction 91%			13 Arc minutes Double Reduction: 86%		

* Add armature inertia to gearing inertia for total SLG system inertia
Test data derived using NEMA recommended aluminum heatsink 10" x 10" x 1/4" at 25°C ambient

SLM/SLG075

Motor Stator		118	138	158	168	218	238	258	268	318	338	358	368
Voltage Rating	Vrms	115	230	400	460	115	230	400	460	115	230	400	460
Speed @ Bus Voltage	rpm	4000											
RMS SINUSOIDAL COMMUTATION													
Continuous Motor Torque	lbf-in	16.6	16.4	16.3	16.0	26.0	26.4	26.2	26.4	37.9	35.9	37.3	36.4
	Nm	1.88	1.85	1.84	1.81	2.94	2.89	2.96	2.98	4.29	4.05	4.21	4.12
Peak Motor Torque	lbf-in	33.3	32.8	32.6	32.1	52.0	52.7	52.4	52.8	75.9	71.7	74.6	72.9
	Nm	3.76	3.70	3.68	3.62	5.88	5.96	5.92	5.96	8.57	8.10	8.43	8.23
Torque Constant (Kt) (+/– 10% @ 25˚C)	lbf-in/A	3.4	6.6	12.5	13.1	3.7	6.8	11.6	13.5	3.4	6.8	11.6	13.9
	Nm/A	0.4	0.7	1.4	1.5	0.4	0.8	1.3	1.5	0.4	0.8	1.3	1.6
Continuous Current Rating	A	5.5	2.8	1.5	1.4	7.9	4.4	2.5	2.2	12.5	5.9	3.6	2.9
Peak Current Rating	A	11.0	5.6	2.9	2.7	15.9	8.7	5.1	4.4	25.1	11.8	7.2	5.8
O-PEAK SINUSOIDAL COMMUTATION													
Continuous Motor Torque	lbf-in	16.6	16.4	16.3	16.0	26.0	26.4	26.2	26.4	37.9	35.9	37.3	36.4
	Nm	1.88	1.85	1.84	1.81	2.94	2.98	2.96	2.98	4.29	4.05	4.21	4.12
Peak Motor Torque	lbf-in	33.3	32.8	32.6	32.1	52.0	52.7	52.4	52.8	75.9	71.7	74.6	72.9
	Nm	3.76	3.70	3.68	3.62	5.88	5.96	5.92	5.96	8.57	8.10	8.43	8.23
Torque Constant (Kt) (+/– 10% @ 25˚C)	lbf-in/A	2.4	4.6	8.8	9.3	2.6	4.8	8.2	9.6	2.4	4.8	8.2	9.9
	Nm/A	0.3	0.5	1.0	1.0	0.3	0.5	0.9	1.1	0.3	0.5	0.9	1.1
Continuous Current Rating	A	7.8	4.0	2.1	1.9	11.2	6.2	3.6	3.1	17.7	8.4	5.1	4.1
Peak Current Rating	A	15.6	7.9	4.1	3.9	22.4	12.3	7.2	6.2	35.5	16.8	10.1	8.3
MOTOR STATOR DATA													
Voltage Constant (Ke)	Vrms/Krpm	23.1	44.7	85.2	89.5	25.0	46.2	78.9	92.4	23.1	46.2	79.4	95.3
(+/– 10% @ 25˚C)	Vpk/Krpm	32.7	63.3	120.4	126.5	35.4	65.3	111.6	130.6	32.7	65.3	112.3	134.7
Pole Configuration		8	8	8	8	8	8	8	8	8	8	8	8
Resistance (L-L)(+/– 5% @ 25˚C)	Ohms	1.66	6.42	23.49	26.84	0.83	2.75	8.15	11.01	0.40	1.77	4.83	7.29
Inductance (L-L)(+/– 15%)	mH	4.6	17.3	62.6	69.2	2.6	8.8	25.7	35.2	1.4	5.8	17.0	24.5
SLM Armature Inertia	lbf-in-sec^2 (+/– 5%)	0.00054				0.00097				0.00140			
	Kg-cm^2	0.616				1.100				1.583			
Brake Inertia	lbf-in-sec^2	0.000159				0.000159				0.000159			
	Kg-cm^2	0.18				0.18				0.18			
Brake Current @ 25 VDC	A	0.5				0.5				0.5			
Brake Holding Torque	lbf-in	40				40				40			
	Nm	4.5				4.5				4.5			
Brake Engage/Disengage Time	ms	9/35				9/35				9/35			
Mechanical Time Constant (tm)	ms	1.71	1.77	1.79	1.85	1.31	1.27	1.29	1.27	1.05	1.18	1.09	1.14
Electrical Time Constant (te)	ms	2.78	2.69	2.67	2.58	3.11	3.19	3.15	3.20	3.65	3.26	3.53	3.37
Friction Torque	lbf-in (Nm)	0.51 (0.058)				0.67 (0.075)				0.90 (0.101)			
Insulation Class		180 (H)											
Insulation System Volt Rating	Vrms	460											
Environmental Rating		IP65S											

For amplifiers using peak sinusoidal ratings, multiply RMS sinusoidal Kt by 0.707 and current by 1.414.

Gearmotor Data

	1 Stack Motor	2 Stack Motor	3 Stack Motor
SLG Armature Inertia* lbf-in-sec^2 (Kg-cm^2)	0.000660 (0.7450)	0.001068 (1.2057)	0.001494 (1.6868)
SLM Armature Inertia* lbf-in-sec^2 (Kg-cm^2)	0.000545 (0.6158)	0.000973 (1.0996)	0.001401 (1.5834)
GEARING REFLECTED INERTIA	SINGLE REDUCTION		
	Gear Stages	lbf-in-sec^2	(Kg-cm^2)
	4:1	0.0000947	(0.1069)
	5:1	0.0000617	(0.0696)
	10:1	0.0000165	(0.0186)
Backlash at 1% rated torque	10 Arc minutes Efficiency: Single reduction 91%		

* Add armature inertia to gearing inertia for total SLG system inertia
Test data derived using NEMA recommended aluminum heatsink 10" x 10" x 3/8" at 25°C ambient

SLM/SLG090

Motor Stator		118	138	158	168	218	238	258	268	338	358	368
Voltage Rating	Vrms	115	230	400	460	115	230	400	460	230	400	460
Speed @ Bus Voltage	rpm	4000										
RMS SINUSOIDAL COMMUTATION DATA												
Continuous Motor Torque	lbf-in	23.8	24.0	23.7	24.7	39.6	40.0	39.5	39.9	55.7	55.4	55.7
	Nm	2.68	2.71	2.67	2.79	4.47	4.52	4.46	4.51	6.30	6.26	6.30
Peak Motor Torque	lbf-in	47.5	48.0	47.3	49.4	79.1	80.0	79.0	79.9	111.5	110.9	111.5
	Nm	5.37	5.42	5.35	5.58	8.94	9.04	8.93	9.02	12.59	12.52	12.59
Torque Constant (Kt) (+/– 10% @ 25˚C)	lbf-in/A	3.2	6.6	11.6	13.2	3.2	6.6	11.6	13.2	6.6	11.6	13.1
	Nm/A	0.37	0.7	1.3	1.5	0.4	0.7	1.3	1.5	0.7	1.3	1.5
Continuous Current Rating	A	8.2	4.0	2.3	2.1	13.6	6.8	3.8	3.4	9.5	5.3	4.8
Peak Current Rating	A	16.4	8.1	4.6	4.2	27.3	13.5	7.6	6.7	19.0	10.7	9.5
O-PK SINUSOIDAL COMMUTATION DATA												
Continuous Motor Torque	lbf-in	23.8	24.0	23.7	24.7	39.6	40.0	39.5	39.9	55.7	55.4	55.7
	Nm	2.68	2.71	2.67	2.79	4.47	4.52	4.46	4.51	6.30	6.26	6.30
Peak Motor Torque	lbf-in	47.5	48.0	47.3	49.4	79.1	80.0	79.0	79.9	115.5	110.9	111.5
	Nm	5.37	5.42	5.35	5.58	8.94	9.04	8.93	9.02	12.59	12.52	12.59
Torque Constant (Kt) (+/– 10% @ 25˚C)	lbf-in/A	2.3	4.7	8.2	9.4	2.3	4.7	8.2	9.4	4.6	8.2	9.3
	Nm/A	0.26	0.5	0.9	1.1	0.3	0.5	0.9	1.1	0.5	0.9	1.0
Continuous Current Rating	A	11.6	5.7	3.2	2.9	19.3	9.5	5.4	4.8	13.4	7.5	6.7
Peak Current Rating	A	23.2	11.4	6.5	5.9	38.6	19.1	10.8	9.5	26.9	15.1	13.4
MOTOR DATA												
Voltage Constant (Ke) (+/– 10% @ 25˚C)	Vrms/Krpm	22.1	45.2	78.9	90.4	22.1	45.2	78.9	90.4	44.7	79.4	89.5
	Vpk/Krpm	31.3	64.0	111.6	127.9	31.3	64.0	111.6	127.9	63.3	112.3	126.5
Pole Configuration		8	8	8	8	8	8	8	8	8	8	8
Resistance (L-L)(+/– 5% @ 25˚C)	Ohms	0.75	3.06	9.57	11.55	0.30	1.21	3.78	4.86	0.69	2.19	2.75
Inductance (L-L)(+/– 15%)	mH	6.1	25.6	78.0	88.6	2.9	10.5	37.2	43.1	6.6	24.7	31.4
SLM Armature Inertia (+/– 5%)	lbf-in-sec^2	0.00054				0.00097				0.00140		
	Kg-cm^2	0.609				1.09				1.58		
Brake Inertia	lbf-in-sec^2	0.00096				0.00096				0.00096		
	Kg-cm^2	1.08				1.08				1.08		
Brake Current @ 24 VDC	A	0.67				0.67				0.67		
Brake Holding Torque	lbf-in (Nm)	97 (11)				97 (11)				97 (11)		
Brake Engage/Disengage Time	ms	20/29				20/29				20/29		
Mechanical Time Constant (tm)	ms	0.83	0.82	0.84	0.77	0.59	0.58	0.59	0.58	0.48	0.49	0.48
Electrical Time Constant (te)	ms	8.21	7.31	8.14	7.67	9.88	8.66	9.85	8.88	9.57	11.30	11.43
Friction Torque	lbf-in (Nm)	0.68 (0.077)				0.85 (0.095)				1.06 (0.119)		
Insulation Class		180 (H)										
Insulation System Volt Rating	Vrms	460										
Environmental Rating		IP65S										

For amplifiers using peak sinusoidal ratings, multiply RMS sinusoidal Kt by 0.707 and current by 1.414.

Gearmotor Data

	1 Stack Motor		2 Stack Motor	3 Stack Motor	
SLG Armature Inertia* lbf-in-sec^2 (Kg-cm^2)	0.00114 (1.29)		0.00157 (1.77)	0.00200 (2.26)	
GEARING REFLECTED INERTIA	SINGLE REDUCTION			DOUBLE REDUCTION	
	Gear Stages	lbf-in-sec^2	(Kg-cm^2)	Gear Stages	lbf-in-sec^2	(Kg-cm^2)
	4:1	0.000154	(0.174)	16:1	0.000115	(0.130)
	5:1	0.000100	(0.113)	20:1, 25:1	0.0000756	(0.0854)
	10:1	0.0000265	(0.0300)	40:1, 50:1, 100:1	0.0000203	(0.0230)
Backlash at 1% rated torque	10 Arc minutes Efficiency: Single reduction 91%			13 Arc minutes Double Reduction: 86%		

* Add armature inertia to gearing inertia for total SLG system inertia
Test data derived using NEMA recommended aluminum heatsink 10" x 10" x 3/8" at 25°C ambient

SLM/SLG115

Motor Stator		118	138	158	168	238	258	268	338	358	368
Voltage Rating	Vrms	115	230	400	460	230	400	460	230	400	460
Speed @ Bus Voltage	rpm	3000									
RMS SINUSOIDAL COMMUTATION DATA											
Continuous Motor Torque	lbf-in	74.1	74.1	74.3	74.1	123.6	121.4	123.8	172.3	168.9	176.9
	Nm	8.37	8.37	8.39	8.37	13.96	13.72	13.96	19.46	19.09	19.98
Peak Motor Torque	lbf-in	148.2	148.2	148.6	148.1	247.2	242.8	247.2	344.5	337.8	353.7
	Nm	16.74	16.74	16.79	16.74	27.93	27.43	27.93	38.93	38.17	39.96
Torque Constant (Kt) (+/– 10% @ 25˚C)	lbf-in/A	4.3	8.7	15.7	17.3	8.7	15.8	17.3	8.5	15.8	17.5
	Nm/A	0.49	1.0	1.8	2.0	1.0	1.8	2.0	1.0	1.8	2.0
Continuous Current Rating	A	19.1	9.5	5.3	4.8	15.9	8.6	8.0	22.7	11.9	11.3
Peak Current Rating	A	38.2	19.1	10.6	9.5	31.8	17.1	15.9	45.4	23.8	22.5
O-PK SINUSOIDAL COMMUTATION DATA											
Continuous Motor Torque	lbf-in	74.1	74.1	74.3	74.1	123.6	121.4	123.6	172.3	168.9	176.9
	Nm	8.37	8.37	8.39	8.37	13.96	13.72	13.96	19.46	19.09	19.98
Peak Motor Torque	lbf-in	148.2	148.2	148.6	148.1	247.2	242.8	247.2	344.5	337.8	353.7
	Nm	16.74	16.74	16.79	16.74	27.93	27.43	27.93	38.93	38.17	39.96
Torque Constant (Kt) (+/– 10% @ 25˚C)	lbf-in/A	3.1	6.1	11.1	12.3	6.1	11.2	12.3	6.0	11.2	12.4
	(Nm/A)	0.35	0.7	1.3	1.4	0.7	1.3	1.4	0.7	1.3	1.4
Continuous Current Rating	A	27.0	13.5	7.5	6.7	22.5	12.1	11.3	32.1	16.9	15.9
Peak Current Rating	A	54.0	27.0	15.0	13.5	45.0	24.2	22.5	64.2	33.7	31.9
MOTOR DATA											
Voltage Constant (Ke) (+/– 10% @ 25˚C)	Vrms/Krpm	29.6	59.2	106.9	118.5	59.2	108.2	118.5	58.0	108.2	119.8
	Vpk/Krpm	41.9	83.8	151.2	167.6	83.8	153.0	167.6	82.0	153.0	169.4
Pole Configuration		8	8	8	8	8	8	8	8	8	8
Resistance (L-L)(+/– 5% @ 25˚C)	Ohms	0.20	0.80	2.60	3.21	0.34	1.17	1.35	0.20	0.72	0.81
Inductance (L-L)(+/– 15%)	mH	3.3	13.0	42.4	52.1	5.9	21.1	25.3	4.0	13.1	17.1
SLM Armature Inertia (+/– 5%)	lbf-in-sec^2	0.00342				0.00620			0.00899		
	Kg-cm^2	3.86				7.00			10.14		
Brake Inertia	lbf-in-sec^2	0.00327				0.00327			0.00327		
	Kg-cm^2	3.70				3.70			3.70		
Brake Current @ 24 VDC	A	0.75				0.75			0.75		
Brake Holding Torque	lbf-in (Nm)	195 (22)				195 (22)			195 (22)		
Brake Engage/Disengage Time	ms	25/50				25/50			25/50		
Mechanical Time Constant (tm)	ms	0.80	0.80	0.79	0.80	0.61	0.63	0.61	0.54	0.56	0.51
Electrical Time Constant (te)	ms	16.26	16.26	16.34	16.25	17.6	18.06	18.72	18.5	18.14	21.16
Friction Torque	lbf-in (Nm)	1.43 (0.16)				1.81 (0.204)			2.32 (0.262)		
Insulation Class		180 (H)									
Insulation System Volt Rating	Vrms	460									
Environmental Rating		IP65S									

For amplifiers using peak sinusoidal ratings, multiply RMS sinusoidal Kt by 0.707 and current by 1.414.

Gearmotor Data

	1 Stack Motor		2 Stack Motor		3 Stack Motor	
SLG Armature Inertia* lbf-in-sec^2 (Kg-cm^2)	0.00662 (7.47)		0.00945 (10.67)		0.01228 (13.86)	
GEARING REFLECTED INERTIA	SINGLE REDUCTION			DOUBLE REDUCTION		
	Gear Stages	lbf-in-sec^2	(Kg-cm^2)	Gear Stages	lbf-in-sec^2	(Kg-cm^2)
	4:1	0.000895	(1.010)	16:1	0.000513	(0.579)
	5:1	0.000585	(0.660)	20:1, 25:1	0.000346	(0.391)
	10:1	0.000152	(0.172)	40:1, 50:1, 100:1	0.000092	(0.104)
Backlash at 1% rated torque	10 Arc minutes Efficiency: Single reduction 91%			13 Arc minutes Double Reduction: 86%		

* Add armature inertia to gearing inertia for total SLG system inertia
Test data derived using NEMA recommended aluminum heatsink 12" x 12" x 1/2" at 25°C ambient

SLM142

Motor Stator		118	138	158	168	238	258	268	358	368
Bus Voltage	Vrms	115	230	400	460	230	400	460	400	460
Speed @ Bus Voltage	RPM	2400								
RMS SINUSOIDAL COMMUTATION DATA										
Continuous Motor Torque	lbf-in	108.5	107.2	104.8	109.4	179.9	178.8	177.8	237.2	238.3
	Nm	12.25	(2.12	11.84	12.36	20.32	20.20	20.09	26.80	26.93
Peak Motor Torque	lbf-in	216.9	214.5	209.5	218.8	359.8	357.6	355.7	474.4	476.7
	Nm	24.51	24.23	23.67	24.72	40.65	40.40	40.19	53.60	53.85
Torque Constant (Kt) (+/– 10% @ 25˚C)	lbf-in/A	5.9	11.8	20.2	23.6	11.8	20.2	23.6	20.2	24.0
	Nm/A	0.67	1.3	2.3	2.7	1.3	2.3	2.7	2.3	2.7
Continuous Current Rating	A	20.5	10.2	5.8	5.2	17.0	9.9	8.4	13.1	11.1
Peak Current Rating	A	41.1	20.3	11.6	10.4	34.1	19.8	16.8	26.2	22.2
O-PK SINUSOIDAL COMMUTATION DATA										
Continuous Motor Torque	lbf-in	108.5	107.2	104.8	109.4	179.9	178.8	177.8	237.2	238.3
	Nm	12.25	12.12	11.84	12.36	20.32	20.20	20.09	26.80	26.93
Peak Motor Torque	lbf-in	216.9	214.5	209.5	218.8	359.8	357.6	355.7	474.4	476.7
	Nm	24.51	24.23	23.67	24.72	40.65	40.40	40.19	53.60	53.85
Torque Constant (Kt) (+/– 10% @ 25˚C)	lbf-in/A	4.2	8.3	14.3	16.7	8.3	14.3	16.7	14.3	17.0
	Nm/A	0.47	0.9	1.6	1.9	0.9	1.6	1.9	1.6	1.9
Continuous Current Rating	A	29.1	14.4	8.2	7.3	24.1	14.0	11.9	18.5	15.7
Peak Current Rating	A	58.1	28.7	16.4	14.7	48.2	27.9	23.8	37.1	31.4
MOTOR DATA										
Voltage Constant (Ke)	Vrms/Krpm	40.3	80.6	138.1	161.1	80.6	138.1	161.1	138.1	164.0
(+/– 10% @ 25˚C)	Vpk/Krpm	57.0	113.9	195.3	227.9	113.9	195.3	227.9	195.3	232.0
Pole Configuration		8	8	8	8	8	8	8	8	8
Resistance (L-L)(+/– 5% @ 25˚C)	Ohms	0.21	0.87	2.68	3.34	0.339	1.01	1.39	0.61	0.858
Inductance (L-L)(+/– 15%)	mH	5.4	21.7	63.9	78.3	10.4	27.6	41.5	20.0	28.2
Armature Inertia (+/– 5%)	lb-in-sec^2	0.00927				0.01537			0.02146	
	Kg-cm^2	10.47				17.363			24.249	
Brake Inertia	lb-in-sec^2	0.008408				0.008408			0.008408	
	Kg-cm^2	9.5				9.5			9.5	
Brake Current @ 24 VDC	A	1.0				1.0			1.0	
Brake Holding Torque	lbf-in (Nm)	354 (39.99)				354 (39.99)			354 (39.99)	
Brake Engage/Disengage Time	ms	25/73				25/73			25/73	
Mechanical Time Constant (tm)	ms	1.23	1.26	1.32	1.21	0.81	0.82	0.83	0.70	0.69
Electrical Time Constant (te)	ms	25.59	25.02	23.88	23.43	30.58	27.30	29.89	32.60	32.90
Friction Torque	lbf-in (Nm)	2.07 (0.234)				2.65 (0.299)			3.32 (0.375)	
Insulation Class		180 (H)								
Insulation System Volt Rating	Vrms	460								
Environmental Rating		IP65S								

For amplifiers using peak sinusoidal ratings, multiply RMS sinusoidal Kt by 0.707 and current by 1.414.
Gearmotor not available on 142 frame motor.
Test data derived using NEMA recommended aluminum heatsink 12" x 12" x 1/2" at 25°C ambient

SLM180

Motor Stator		138	158	168	238	258	268	358	368
Bus Voltage	Vrms	230	400	460	230	400	460	400	460
Speed @ Bus Voltage	RPM	2400							
RMS SINUSOIDAL COMMUTATION DATA									
Continuous Motor Torque	lbf-in	254.2	249.9	261.9	424.8	423.0	427.5	595.6	611.6
	Nm	28.72	28.23	29.59	47.99	47.79	48.30	67.29	69.10
Peak Motor Torque	lbf-in	508.4	499.8	523.8	849.6	846.0	855.1	1,191.2	1223.2
	Nm	57.44	56.47	59.18	95.99	95.59	96.61	134.58	138.19
Torque Constant (Kt) (+/– 10% @ 25˚C)	lbf-in/A	12.6	21.8	25.2	12.6	21.8	25.2	21.4	25.2
	Nm/A	1.4	2.5	2.8	1.4	2.5	2.8	2.4	2.8
Continuous Current Rating (IG)	A	22.6	12.8	11.6	37.7	21.7	19.0	31.1	27.2
Peak Current Rating	A	45.2	25.6	23.3	75.5	43.4	38.0	62.2	54.3
O-PK SINUSOIDAL COMMUTATION DATA									
Continuous Motor Torque	lbf-in	254.2	249.9	261.9	424.8	423.0	427.5	595.6	611.6
	Nm	28.72	28.23	29.59	47.99	47.79	48.30	67.29	69.10
Peak Motor Torque	lbf-in	508.4	499.8	523.8	849.6	846.0	855.1	1,191.2	1,223.2
	Nm	57.44	56.47	59.18	95.99	95.59	96.61	134.58	138.19
Torque Constant (Kt) (+/– 10% @ 25˚C)	lbf-in/A	8.9	15.4	17.8	8.9	15.4	17.8	15.1	17.8
	Nm/A	1.0	1.7	2.0	1.0	1.7	2.0	1.7	2.0
Continuous Current Rating	A	31.9	18.1	16.4	53.4	30.7	26.8	44.0	38.4
Peak Current Rating	A	63.9	36.2	32.9	106.7	61.3	53.7	88.0	76.8
MOTOR STATOR DATA									
Voltage Constant (Ke)	Vrms/Krpm	85.9	148.9	171.8	85.9	148.9	171.8	146.1	171.8
(+/– 10% @ 25˚C)	Vpk/Krpm	121.5	210.6	243.0	121.5	210.6	243.0	206.6	243.0
Pole Configuration		8	8	8	8	8	8	8	8
Resistance (L-L)(+/– 5% @ 25˚C)	Ohms	0.325	1.010	1.224	0.134	0.407	0.530	0.233	0.306
Inductance (L-L)(+/– 15%)	mH	8.3	24.8	29.4	3.9	11.8	15.8	7.5	10.3
Armature Inertia (+/– 5%)	lb-in-sec^2	0.05051			0.08599			0.12147	
	Kg-cm^2	57.071			97.159			137.246	
Brake Inertia	lb-in-sec^2	0.02815							
	Kg-cm^2	31.8							
Brake Current @ 24 VDC	A	1.45							
Brake Holding Torque	lbf-in (Nm)	708 (80)							
Brake Engage/Disengage Time	ms	53/97							
Mechanical Time Constant (tm)	ms	2.25	2.33	2.12	1.58	1.59	1.56	1.34	1.27
Electrical Time Constant (te)	ms	25.44	24.58	24.03	29.38	29.14	29.76	32.07	33.81
Friction Torque	lbf-in (Nm)	5.07 (0.573)			7.80 (0.881)			11.52 (1.302)	
Insulation Class		180 (H)							
Insulation System Volt Rating	Vrms	460							
Thermal Switch, Case Temp	deg C	100							
Environmental Rating		IP65S							

For amplifiers using peak sinusoidal ratings, multiply RMS sinusoidal Kt by 0.707 and current by 1.414.
Gearmotor not available on 180 frame.
Test data derived using NEMA recommended aluminum heatsink 16" x 16" x 1" at 25°C ambient

SLG Series Gearmotor General Performance Specifications

Two torque ratings for the SLG Series Gearmotors are given in the table below. The left hand columns give the maximum (peak) allowable output torque for the indicated ratios of each size SLG Series Gearmotor. This is NOT the rated output torque of the motor multiplied by the ratio of the reducer.

It is possible to select a configuration of the motor selection and gear ratio such that the rated motor torque, multiplied by the gear ratio exceeds these ratings. It is the responsibility of the user to ensure that the settings of the system, including the amplifier, do not allow these values to be exceeded.

The right hand columns give the output torque at the indicated speed which will result in 10,000 hour (L10). The setup of the system, including the amplifier, will determine the actual output torque and speed.

SLM Radial Load

RPM	50	100	250	500	1000	3000
SLM060 lbf (N)	250 (1112)	198 (881)	148 (658)	116 (516)	92 (409)	64 (285)
SLM075 lbf (N)	278 (1237)	220 (979)	162 (721)	129 (574)	102 (454)	71 (316)
SLM090 lbf (N)	427 (1899)	340 (1512)	250 (1112)	198 (881)	158 (703)	109 (485)
SLM115 lbf (N)	579 (2576)	460 (2046)	339 (1508)	269 (1197)	214 (952)	148 (658)
SLM142 lbf (N)	1367 (6081)	1085 (4826)	800 (3559)	635 (2825)	504 (2242)	349 (1552)
SLM180 lbf (N)	2237 (9951)	1776 (7900)	1308 (5818)	1038 (4617)	824 (3665)	605 (2691)

SLG Radial Load

RPM	50	100	250	500	1000	3000
SLG060 lbf (N)	189 (841)	150 (667)	110 (489)	88 (391)	70 (311)	48 (214)
SLG075 lbf (N)	343 (1526)	272 (1210)	200 (890)	159 (707)	126 (560)	88 (391)
SLG090 lbf (N)	350 (1557)	278 (1237)	205 (912)	163 (725)	129 (574)	89 (396)
SLG115 lbf (N)	858 (3817)	681 (3029)	502 (2233)	398 (1770)	316 (1406)	218 (970)

Side load ratings shown above are for 10,000 hour bearing life at 25 mm from motor face at given rpm.

Output Torque Ratings–Mechanical

Model	Ratio	Maximum Allowable Output Torque Set by User- lbf-in (Nm)	Output Torque @ Speed for 10,000 Hour Life – lbf-in (Nm)		
			1000 RPM	3000 RPM	5000 RPM
SLG060	4:1	603 (68.1)	144 (16.2)	104 (11.7)	88 (9.9)
	5:1	522 (58.9)	170 (19.2)	125 (14.1)	105 (11.9)
	10:1	327 (36.9)	200 (22.6)	140 (15.8)	120 (13.6)
	16:1	603 (68.1)	224 (25.3)	160 (18.1)	136 (15.4)
	20:1	603 (68.1)	240 (27.1)	170 (19.2)	146 (16.5)
	25:1	522 (58.9)	275 (31.1)	200 (22.6)	180 (20.3)
	40:1	603 (68.1)	288 (32.5)	208 (23.5)	180 (20.3)
	50:1	522 (58.9)	340 (38.4)	245 (27.7)	210 (23.7)
	100:1	327 (36.9)	320 (36.1)	280 (31.6)	240 (27.1)
			1000 RPM	2500 RPM	4000 RPM
SLG075	4:1	1618 (182.3)	384 (43.4)	292 (32.9)	254 (23.7)
	5:1	1446 (163.4)	395 (44.6)	300 (33.9)	260 (29.4)
	10:1	700 (79.1)	449 (50.7)	341 (38.5)	296 (33.4)
			1000 RPM	2500 RPM	4000 RPM
SLG090	4:1	2078 (234.8)	698 (78.9)	530 (59.9)	460 (51.9)
	5:1	1798 (203.1)	896 (101.2)	680 (76.8)	591 (66.8)
	10:1	1126 (127.2)	1043 (117.8)	792 (89.5)	688 (77.7)
	16:1	2078 (234.8)	1057 (119.4)	803 (90.7)	698 (78.9)
	20:1	2078 (234.8)	1131 (127.8)	859 (97.1)	746 (84.3)
	25:1	1798 (203.1)	1452 (164.1)	1103 (124.6)	958 (108.2)
	40:1	2078 (234.8)	1392 (157.3)	1057 (119.4)	918 (103.7)
	50:1	1798 (203.1)	1787 (201.9)	1358 (153.4)	1179 (133.2)
	100:1	1126 (127.2)	1100 (124.3)	1100 (124.3)	1100 (124.3)
			1000 RPM	2000 RPM	3000 RPM
SLG115	4:1	4696(530.4)	1392 (157.3)	1132 (127.9)	1000 (112.9)
	5:1	4066 (459.4)	1445 (163.3)	1175 (132.8)	1040 (117.5)
	10:1	2545 (287.5)	1660 (187.6)	1350 (152.6)	1200 (135.6)
	16:1	4696 (530.4)	2112 (238.6)	1714 (193.0)	1518 (171.0)
	20:1	4696 (530.4)	2240 (253.1)	1840 (207.9)	1620 (183.0)
	25:1	4066 (459.4)	2350 (265.5)	1900 (214.7)	1675 (189.2)
	40:1	4696 (530.4)	2800 (316.4)	2240 (253.1)	2000 (225.9)
	50:1	4066 (459.4)	2900 (327.7)	2350 (265.5)	2100 (237.3)
	100:1	2545 (287.5)	2500 (282.5)	2500 (282.5)	2400 (271.2)

1 Stage 2 Stage

Motor and Gearmotor Weight

	SLM/G060			SLM/G075		SLM/G090			SLM/G115			SLM142	SLM180
	Motor	1 Stage	2 Stage	Motor	1 Stage	Motor	1 Stage	2 Stage	Motor	1 Stage	2 Stage	(gear stages not available on SLM142 and SLM180)	
1 Stack lbs (kg)	3.0 (1.4)	7.5 (3.4)	9.3 (2.4)	4.2 (1.9)	6.6 (3.0)	5.4 (2.4)	12.8 (5.8)	14.8 (6.7)	14.2 (6.4)	28 (12.7)	34 (15.4)	31 (14.0)	60 (27.2)
2 Stack lbs (kg)	4.1 (1.9)	8.6 (3.9)	10.4 (4.7)	6.0 (2.7)	8.4 (3.8)	7.8 (3.5)	15.2 (6.9)	17.2 (7.8)	22.0 (9.9)	35.8 (16.2)	41.8 (18.9)	39 (17.7)	82 (37.2)
3 Stack lbs (kg)	5.2 (2.4)	9.7 (4.4)	11.5 (5.2)	7.8 (3.5)	10.2 (4.6)	10.2 (4.6)	17.6 (7.9)	19.6 (8.9)	29.8 (13.5)	43.6 (19.8)	49.6 (22.5)	47 (21.3)	104 (47.2)
Brake	1.8 (0.8)			0.8 (0.4)		2.7 (1.2)			4.1 (1.9)			6.0 (2.7)	12 (5.4)

Speed and Torque Curves

These speed vs. torque curves represent approximate continuous torque ratings at the indicated rpms. Different types of servo amplifiers offer varying motor torque.

Peak Torque
Continuous Torque

SLM/SLG-060 (1 STACK)

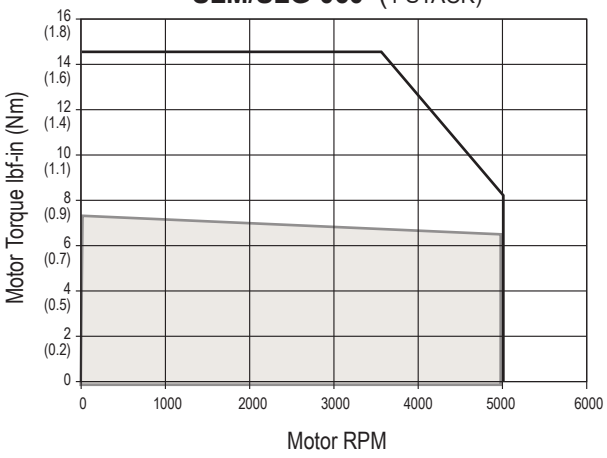

SLM/SLG-075 (1 STACK)

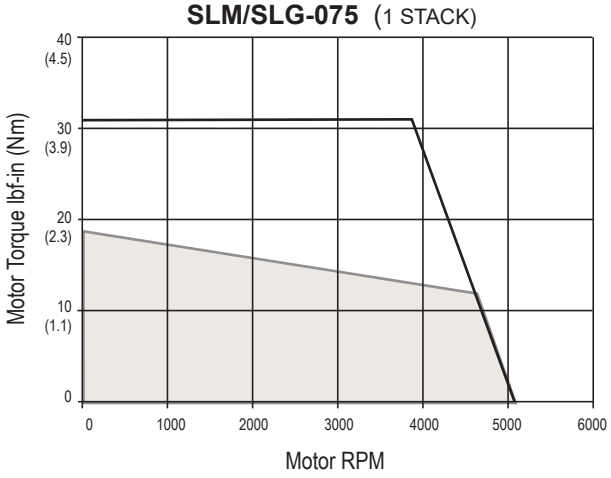

SLM/SLG-060 (2 STACK)

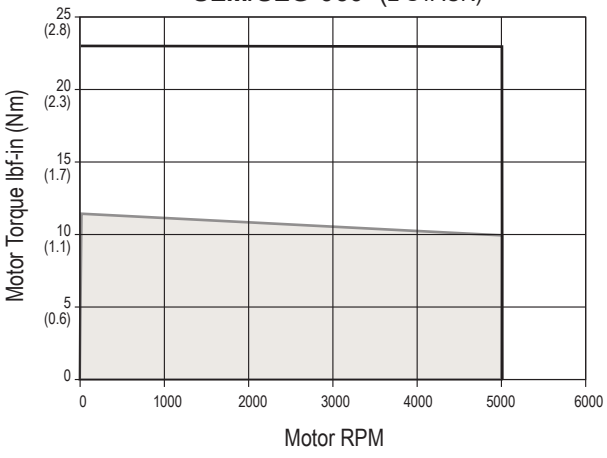

SLM/SLG-075 (2 STACK)

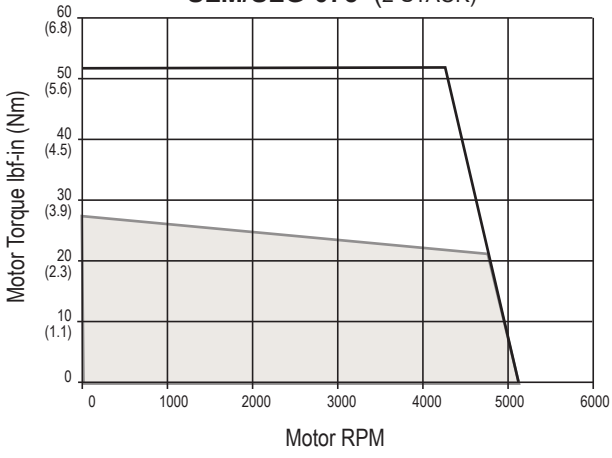

SLM/SLG-060 (3 STACK)

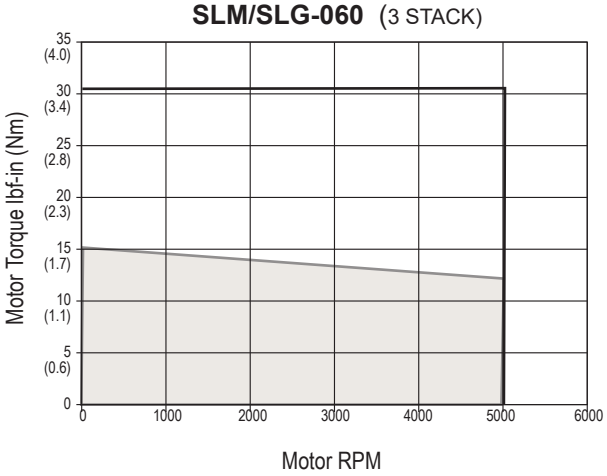

SLM/SLG-075 (3 STACK)

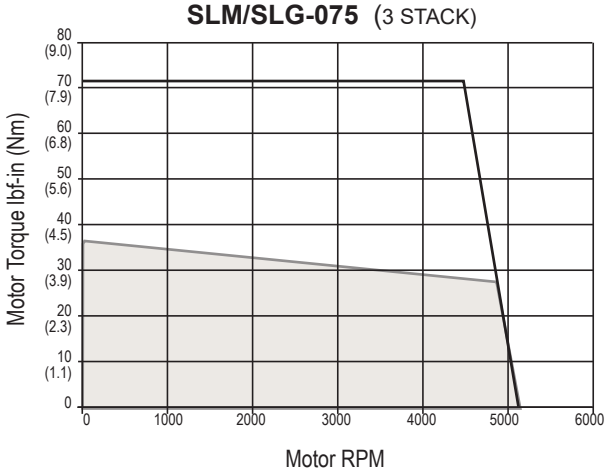

Test data derived using NEMA recommended aluminum heatsink 10" x 10" x 1/4" on SLM/SLG060 and 10" x 10" x 3/8" on SLM/SLG075 at 25° C ambient.
For gearmotors, divide speed by gear ratio; multiply torque by gear ratio and effciency. Efficencies: 1 Stage = 0.91, 2 Stage = 0.86

SLM/SLG-090 (1 STACK)

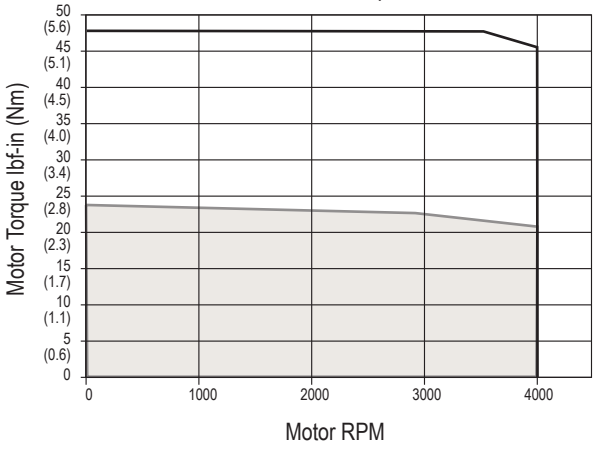

SLM/SLG-115 (1 STACK)

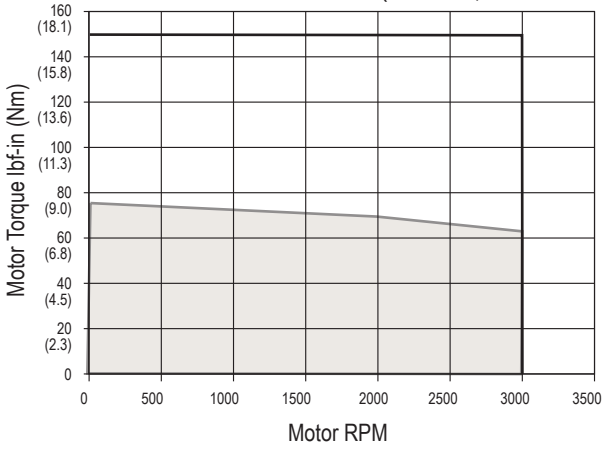

SLM/SLG-090 (2 STACK)

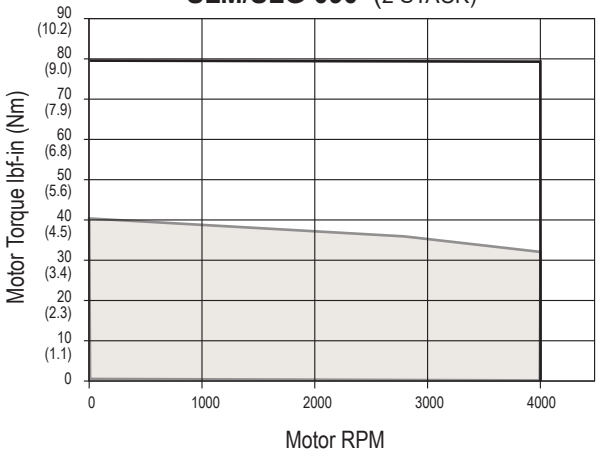

SLM/SLG-115 (2 STACK)

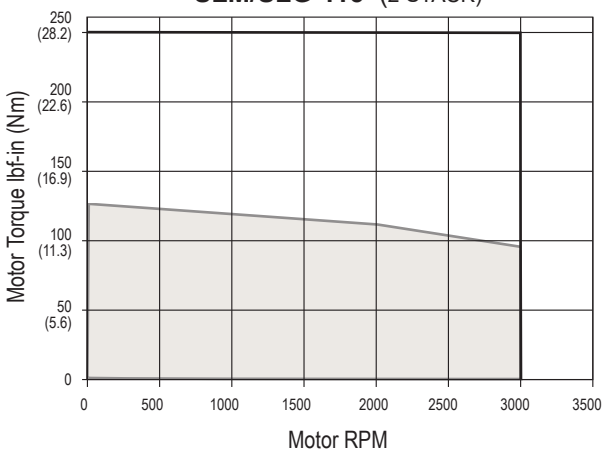

SLM/SLG-090 (3 STACK)

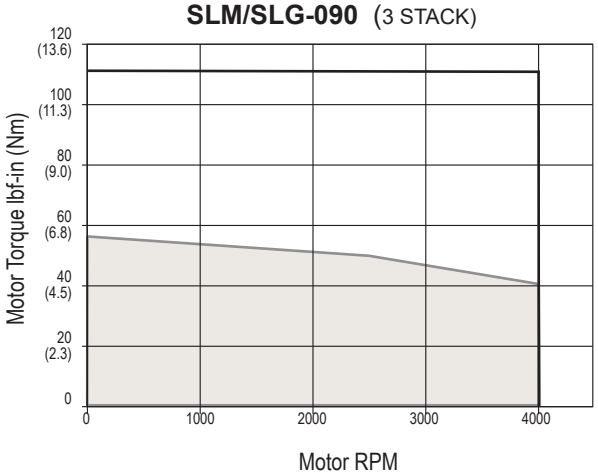

SLM/SLG-115 (3 STACK)

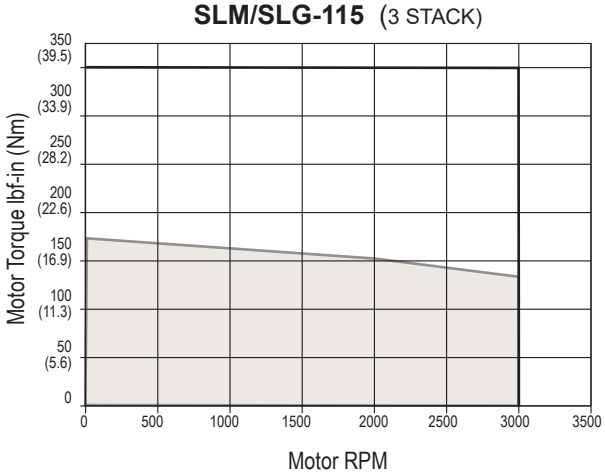

Test data derived using NEMA recommended aluminum heatsink 10" x 10" x 3/8" on SLM/SLG090 and 12" x 12" x 1/2" on SLM/SLG115 at 25°C ambient.
For gearmotors, divide speed by gear ratio; multiply torque by gear ratio and effciency. Efficencies: 1 Stage = 0.91, 2 Stage = 0.86

Peak Torque
Continuous Torque

SLM142 (1 STACK)

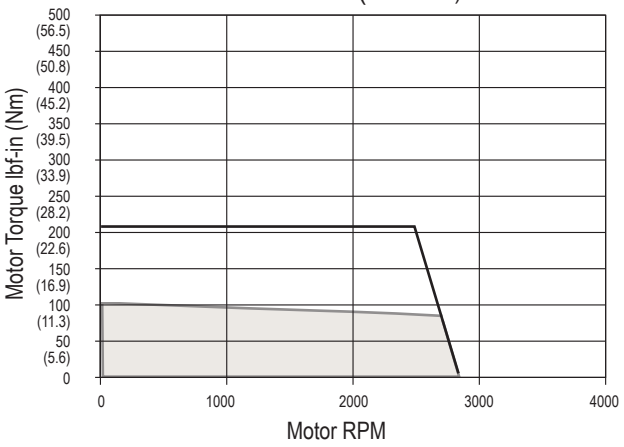

SLM180 (1 STACK)

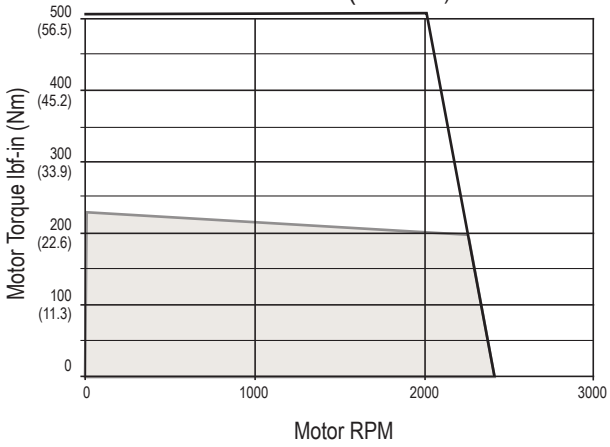

SLM142 (2 STACK)

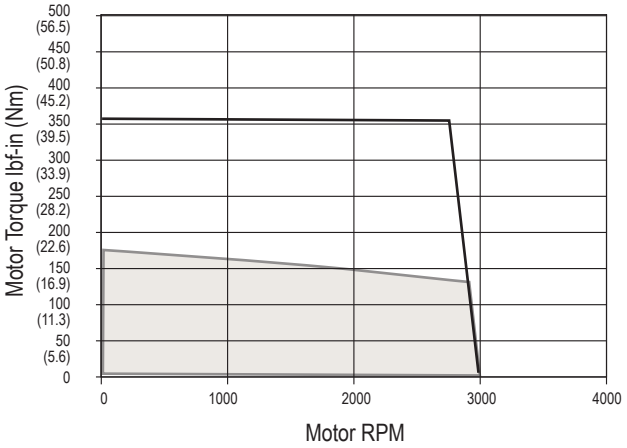

SLM180 (2 STACK)

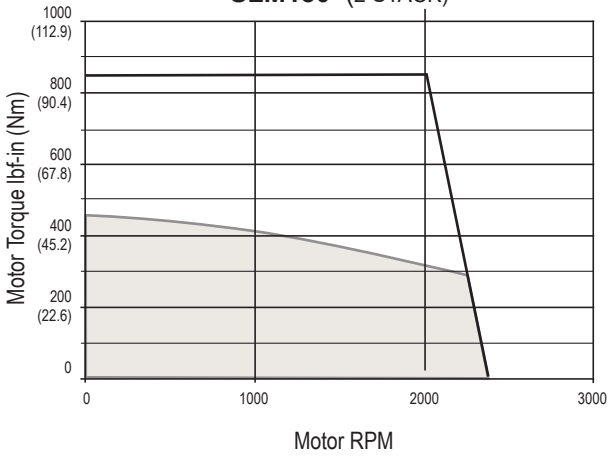

SLM142 (3 STACK)

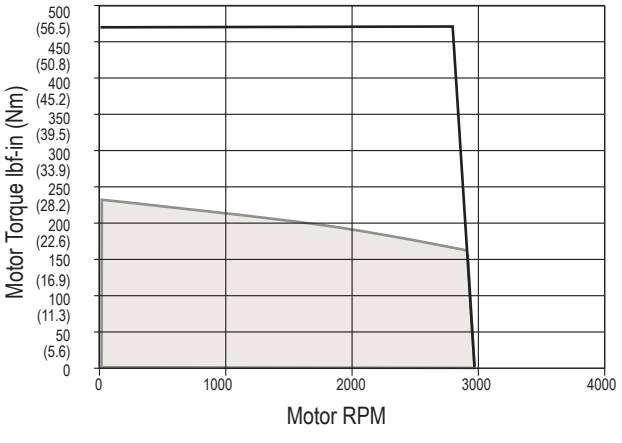

SLM180 (3 STACK)

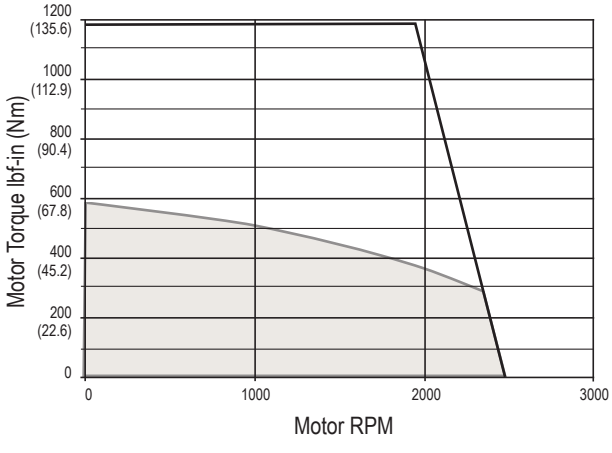

Test data derived using NEMA recommended aluminum heatsink 12" x 12" x 1/2" on SLM142 at 25°C ambient.

Test data derived using NEMA recommended aluminum heatsink 16" x 16" x 1" on SLM180 at 25°C ambient

Peak Torque
Continuous Torque

Options

Motor Speed

All Exlar T-LAM motors and actuators carry a standard motor speed designator (see chart). This is representative of the standard base speed of the motor for the selected bus voltage.

If the model number is created and the location for the motor speed designator is left blank, this is the base speed to which the motor will be manufactured. The model number can also be created including this standard speed designator.

Designator	Base Speed	Motor Series
-50	5000 rpm	SLM/SLG060
-40	4000 rpm	SLM/SLG075
-40	4000 rpm	SLM/SLG090
-30	3000 rpm	SLM/SLG115
-24	2400 rpm	SLM142, SLM180

Motor Stators

SLM/SLG motor options are described with a 3 digit code. The first digit calls out the stack length, the second digit signifies the rated bus voltage, and the third digit identifies the number of poles of the motor. Refer to the mechanical/electrical specifications for motor torque and actuator rated force.

8 Pole, Class 180 H

1 Stack		2 Stack		3 Stack	
118	115 Vrms	218	115 Vrms	318	115 Vrms
138	230 Vrms	238	230 Vrms	338	230 Vrms
158	400 Vrms	258	400 Vrms	358	400 Vrms
168	460 Vrms	268	460 Vrms	368	460 Vrms

IP Ratings

Please see page 175 for full description of IP Ratings.

Dimensions

SLM060

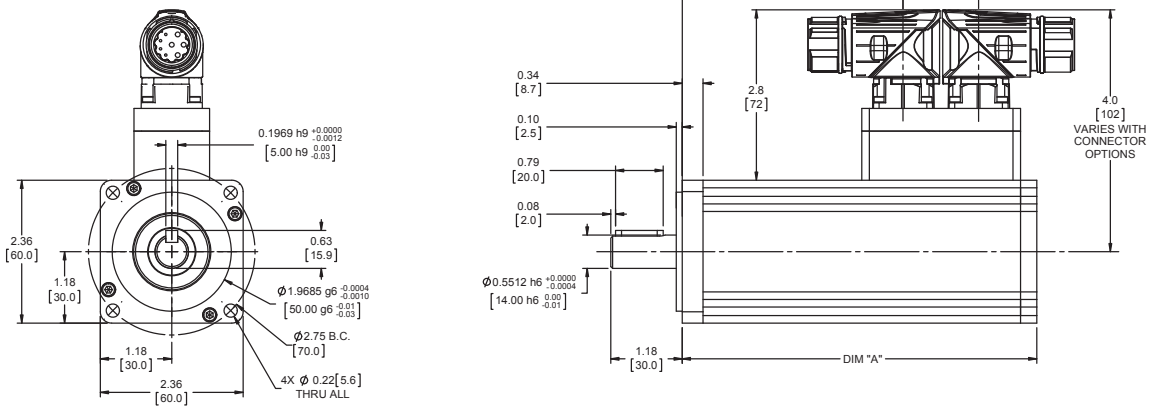

DIM	1 Stack Motor in (mm)	2 Stack Motor in (mm)	3 Stack Motor in (mm)
A	4.61 (117.1)	5.86 (148.9)	7.11 (180.6)
B	2.40 (61.1)	3.65 (92.8)	4.90 (124.6)

Add 1.02 inches (25.9 mm) to Dimensions A and B if ordering a brake.
Face plate edge is not intended for alignment of shaft (use pilot)

SLM075

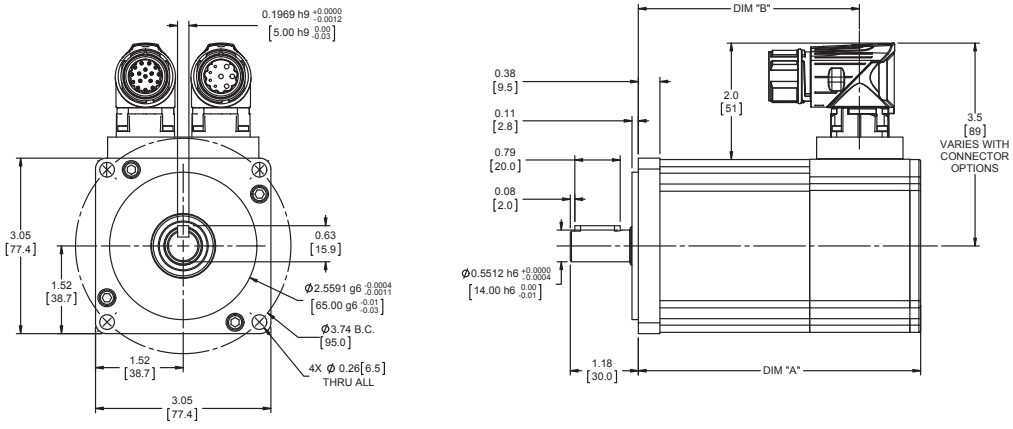

DIM	1 Stack Motor in (mm)	2 Stack Motor in (mm)	3 Stack Motor in (mm)
A	4.90 (124.5)	5.90 (149.9)	6.90 (175.3)
B	3.84 (97.6)	4.84 (123.0)	5.84 (148.4)

Add 1.28 inches (32.5 mm) to Dimensions A and B if ordering a brake.
Face plate edge is not intended for alignment of shaft (use pilot)

Due to the size of many absolute encoders, the selection of such feedback results in a larger package size than is shown in drawings. Consult Exlar for details, or refer to the drawings provided after receipt of order.

Pre-sale drawings and models are representative and are subject to change. Certified drawings and models are available for a fee. Consult your local Exlar representative for details.

SLM090

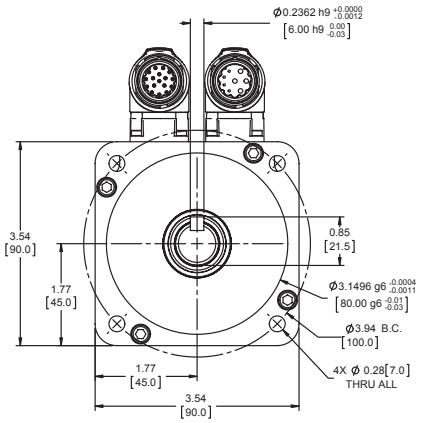

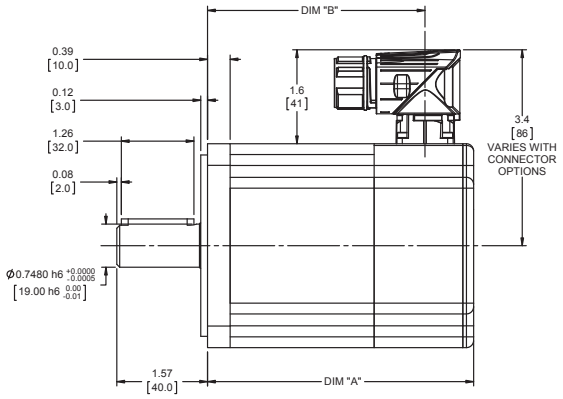

DIM	1 Stack Motor in (mm)	2 Stack Motor in (mm)	3 Stack Motor in (mm)
A	4.65 (118.1)	5.65 (143.5)	6.65 (168.9)
B	3.81 (96.8)	4.76 (121.0)	5.81 (147.6)

Add 1.31 inches (33.3 mm) to Dimensions A and B if ordering a brake.
Face plate edge is not intended for alignment of shaft (use pilot)

SLM115

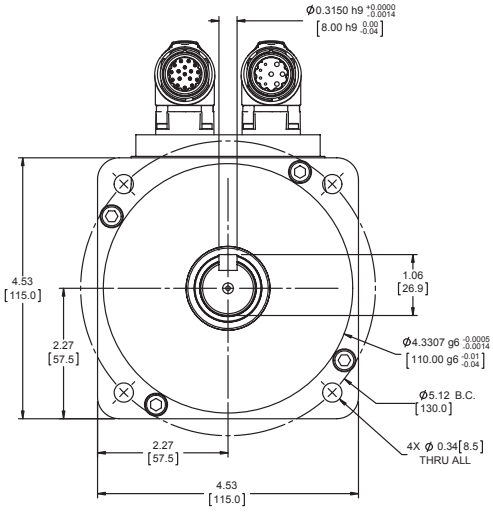

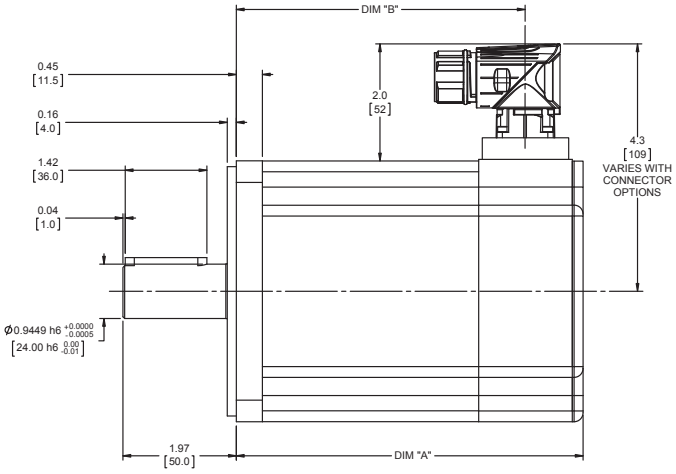

DIM	1 Stack Motor in (mm)	2 Stack Motor in (mm)	3 Stack Motor in (mm)
A	6.02 (152.9)	8.02 (203.7)	10.02 (254.5)
B	5.02 (127.5)	7.02 (178.3)	9.02 (229.1)

Add 1.73 inches (43.9 mm) to Dimensions A and B if ordering a brake.
Face plate edge is not intended for alignment of shaft (use pilot)

Due to the size of many absolute encoders, the selection of such feedback results in a larger package size than is shown in drawings. Consult Exlar for details, or refer to the drawings provided after receipt of order.

SLM142

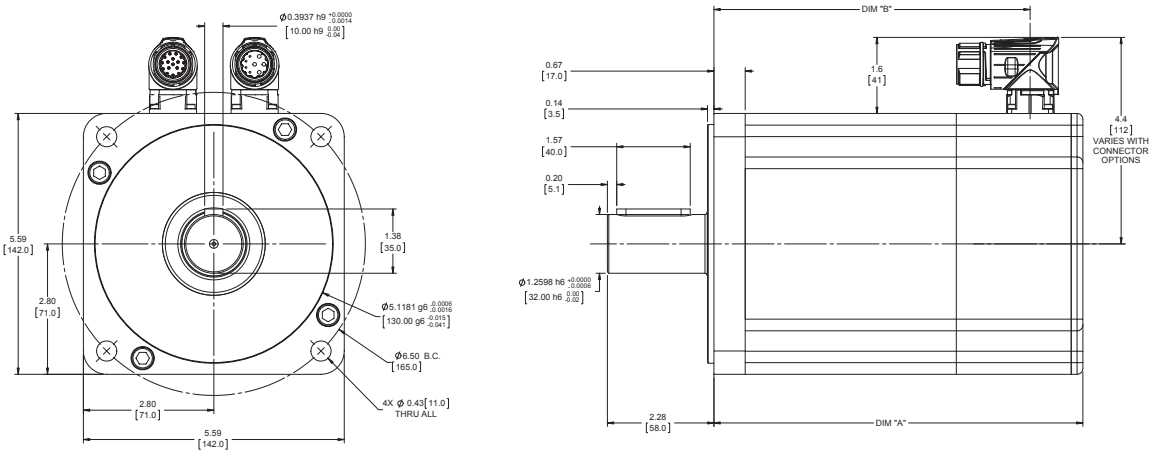

DIM	1 Stack Motor in (mm)	2 Stack Motor in (mm)	3 Stack Motor in (mm)
A	7.87 (199.9)	9.62 (244.3)	11.37 (288.8)
B	6.75 (171.3)	5.50 (139.6)	10.25 (260.2)

Add 1.66 inches (42.2 mm) to Dimensions A and B if ordering a brake.
Face plate edge is not intended for alignment of shaft (use pilot)

SLM180

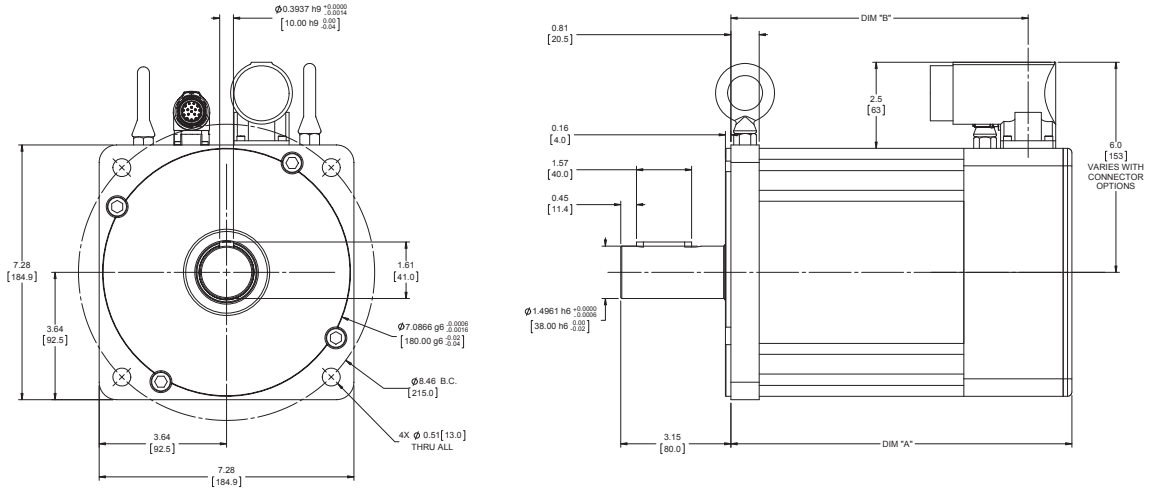

DIM	1 Stack Motor in (mm)	2 Stack Motor in (mm)	3 Stack Motor in (mm)
A	9.74 (247.4)	12.24 (310.9)	14.74 (374.4)
B	8.49 (215.6)	10.99 (279.1)	13.49 (342.6)

Add 1.90 inches (48.3 mm) to Dimensions A and B if ordering a brake.
Face plate edge is not intended for alignment of shaft (use pilot)

Due to the size of many absolute encoders, the selection of such feedback results in a larger package size than is shown in drawings. Consult Exlar for details, or refer to the drawings provided after receipt of order.

Pre-sale drawings and models are representative and are subject to change. Certified drawings and models are available for a fee. Consult your local Exlar representative for details.

SLG060

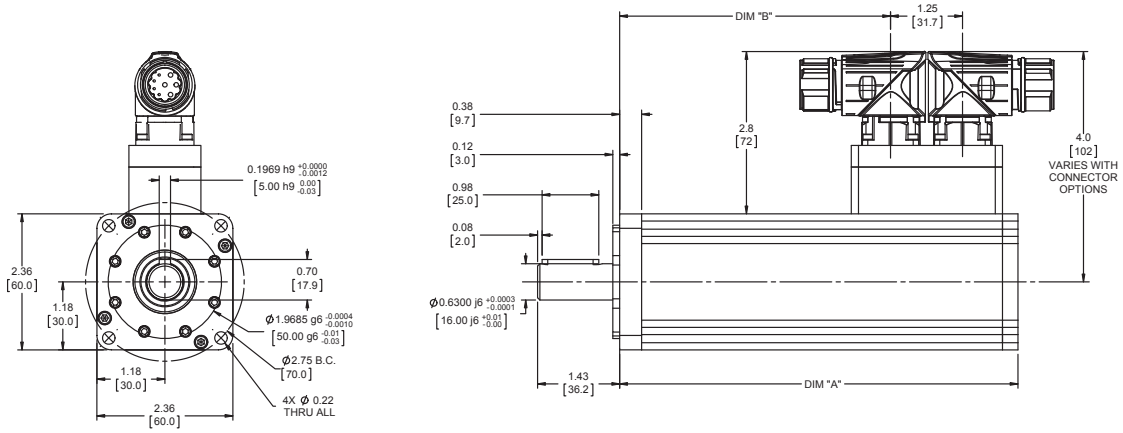

1 Stage Gearhead			
DIM	1 Stack Motor in (mm)	2 Stack Motor in (mm)	3 Stack Motor in (mm)
A	6.92 (175.6)	8.17 (207.4)	9.42 (239.1)
B	4.71 (119.6)	5.96 (151.4)	7.21 (183.1)

2 Stage Gearhead			
DIM	1 Stack Motor in (mm)	2 Stack Motor in (mm)	3 Stack Motor in (mm)
A	7.96 (202.2)	9.21 (233.9)	10.46 (265.7)
B	5.75 (146.2)	7.00 (177.9)	8.25 (209.7)

Add 1.02 inches (25.9 mm) to Dimensions A and B if ordering a brake.
Face plate edge is not intended for alignment of shaft (use pilot)

SLG075

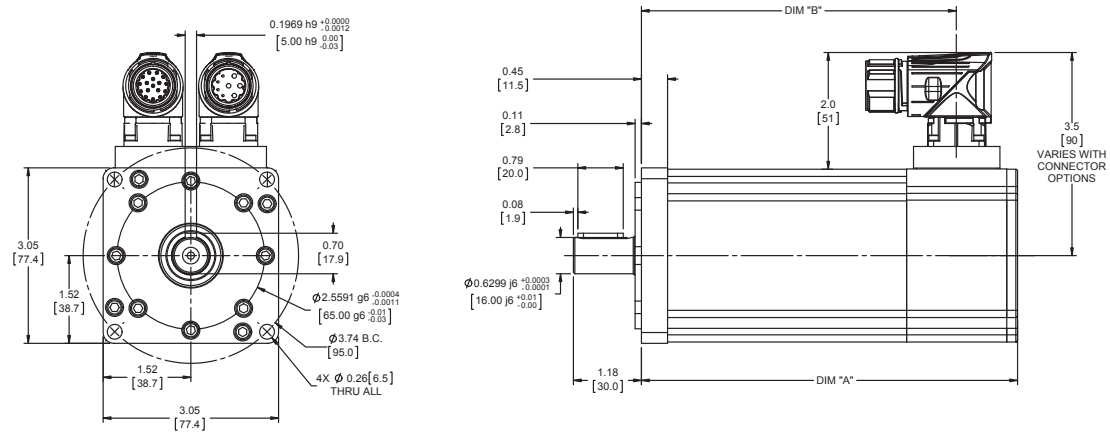

1 Stage Gearhead			
DIM	1 Stack Motor in (mm)	2 Stack Motor in (mm)	3 Stack Motor in (mm)
A	6.53 (165.9)	7.53 (191.3)	8.53 (216.7)
B	5.47 (139.0)	6.47 (164.4)	7.47 (189.8)

Add 1.23 inches (31.2 mm) to Dimensions A and B if ordering a brake.
Face plate edge is not intended for alignment of shaft (use pilot)

Due to the size of many absolute encoders, the selection of such feedback results in a larger package size than is shown in drawings. Consult Exlar for details, or refer to the drawings provided after receipt of order.

Pre-sale drawings and models are representative and are subject to change. Certified drawings and models are available for a fee. Consult your local Exlar representative for details.

SLG090

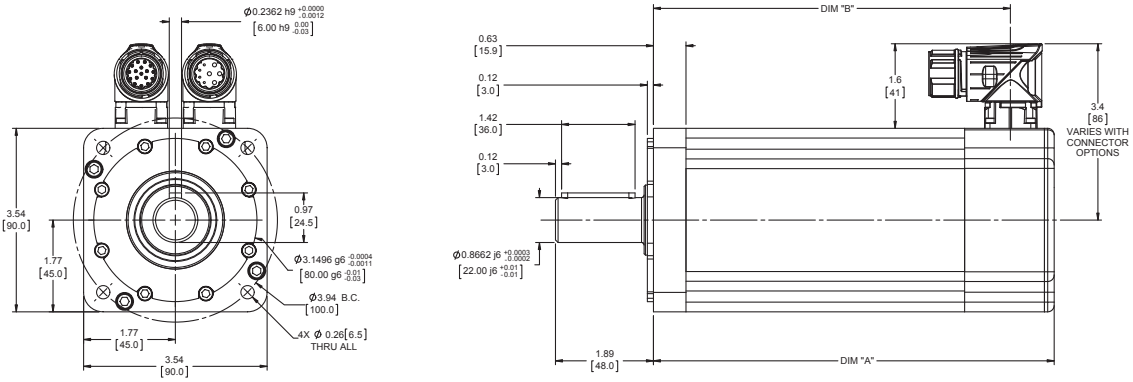

1 Stage Gearhead			
DIM	1 Stack Motor in (mm)	2 Stack Motor in (mm)	3 Stack Motor in (mm)
A	7.76 (197.1)	8.76 (222.5)	9.76 (247.9)
B	6.92 (175.8)	7.92 (201.2)	8.92 (226.6)

2 Stage Gearhead			
DIM	1 Stack Motor in (mm)	2 Stack Motor in (mm)	3 Stack Motor in (mm)
A	9.03 (229.2)	10.03 (254.6)	11.03 (280.0)
B	8.19 (207.9)	9.19 (233.3)	10.19 (258.7)

Add 1.31 inches (33.3 mm) to Dimensions A and B if ordering a brake.
Face plate edge is not intended for alignment of shaft (use pilot)

SLG115

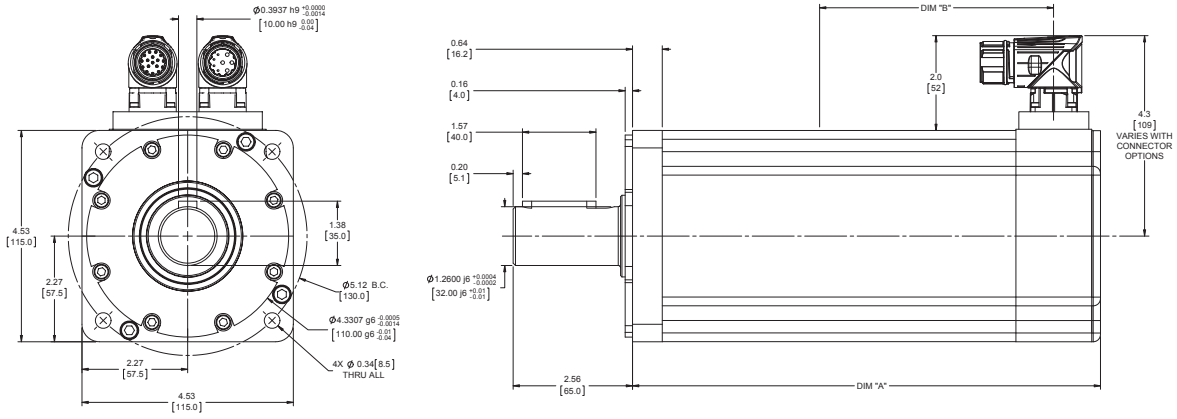

1 Stage Gearhead			
DIM	1 Stack Motor in (mm)	2 Stack Motor in (mm)	3 Stack Motor in (mm)
A	10.03 (254.8)	12.03 (305.6)	14.03 (256.4)
B	9.03 (255.0)	11.03 (280.2)	13.03 (331.0)

2 Stage Gearhead			
DIM	1 Stack Motor in (mm)	2 Stack Motor in (mm)	3 Stack Motor in (mm)
A	11.64 (295.7)	13.64 (346.5)	15.64 (397.3)
B	10.64 (270.3)	12.64 (321.1)	14.64 (372.1)

Add 1.73 inches (43.9 mm) to Dimensions A and B if ordering a brake.
Face plate edge is not intended for alignment of shaft (use pilot)

Due to the size of many absolute encoders, the selection of such feedback results in a larger package size than is shown in drawings. Consult Exlar for details, or refer to the drawings provided after receipt of order.

Pre-sale drawings and models are representative and are subject to change. Certified drawings and models are available for a fee. Consult your local Exlar representative for details.

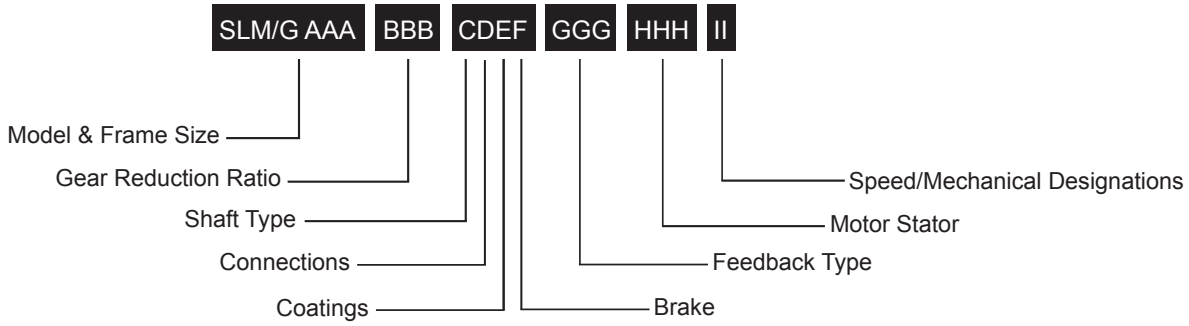

SLM/G = Model Series
SLG = SLG Series Servo Gear Motor
SLM = SLM Series Servo Motor
(No Gear Reduction)

AAA = Frame Size
060 = 60 mm
075 = 75 mm
090 = 90 mm
115 = 115 mm
142 = 142 mm, (SLM only)
180 = 180 mm, (SLM only)

BBB = Gear Reduction Ratio
Blank = SLM
Single reduction ratio
004 = 4:1
005 = 5:1
010 = 10:1
Double reduction ratio (N/A on 075 mm)
016 = 16:1
020 = 20:1
025 = 25:1
040 = 40:1
050 = 50:1
100 = 100:1

C = Shaft Type
K = Keyed

D = Connections
I = Exlar standard M23 style
M = Manufacturer's connector [1]

E = Coating Options
G = Anodized Aluminum (standard)

F = Brake Options
B = Brake
S = Standard no brake

GGG = Feedback Type
See page 164 for detailed information.

HHH = Motor Stator – All 8 Pole [2]

118 = 1 stack	115 Vrms	158 = 1 stack	400 Vrms
218 = 2 stack		258 = 2 stack	
318 = 3 stack		358 = 3 stack	
138 = 1 stack	230 Vrms	168 = 1 stack	460 Vrms
238 = 2 stack		268 = 2 stack	
338 = 3 stack		368 = 3 stack	

II = Optional Speed and Mechanical Designations
24 = 2400 rpm, SLM142 & 180
30 = 3000 rpm, SLM/G115
40 = 4000 rpm, SLM075, SLM/G090
50 = 5000 rpm, SLM/G060

NOTES:
1. Available as described in Feedback Types.
2. See page 153 for explanation of voltage, speed, stack and optimized stator options.

For options or specials not listed above or for extended temperature operation, please contact Exlar