AUTOMATIC
TIMING & CONTROLS

AUTOMATION

TABLE OF CONTENTS

MOTOR PROTECTION

C UL US
LISTED
60947-4-1

Motor Protection Analyzer

FEATURES

MEASUREMENT OF:

- Current
- Voltage
- Frequency
- Power Factor (PF)
- Reactive Power (KVA)
- Real Power (KW)
- Energy Consumption (KWH)

REPORTS:

- Voltage & Current report
- PF, KVA, KWH, KW report
- Adjusted Values report
- Total Motor Running Time report
- Start Mode report
- 20 Last Fault report
- Power Frequency report
- Motor Temperature report

COMMUNICATIONS:

- COM-LINK RS485@ 9600 baud output available (MODBUS RTU protocol)

PHYSICAL FEATURES:

- Din-Rail, Flat Surface or Flush mounting
- 16x2 LCD Display with current values, voltage values, and load report information on screen
- Four (4) push buttons for operation and protection parameter adjustments (I for START, 2 for ADJUST and I for SELECT)
- Enclosure material UL94V0

ADJUSTMENTS OF:

- Overload
- Undercurrent
- Overvoltage
- Undervoltage
- Current Unbalance
- Voltage Unbalance
- Frequency
- Trip Delay
- Start Up Delay after Voltage
- Fault Recovery
- Motor Thermal Class
- Clock Adjustment
- Control of Motor High-Inertia Load
- Schedule Timer
- AUTO / MANUAL Restart Mode
- Password

PROTECTION AGAINST:

- Overload / Undercurrent
- Overvoltage / Undervoltage
- Frequency Shift
- Voltage Unbalance
- Current Unbalance
- Single Phasing
- Phase Reversal
- Locked Rotor

OTHERS:

- Thermal memory

OVERVIEW

MPA2 is a micro-controlled based three-phase Motor Protection Analyzer Relay specifically designed to protect electric loads and motors from failure and damage due to common current and voltage faults.

MPA2 constantly supervises current and voltage values. When any harmful condition occurs, the output connection is deactivated until the fault disappears, power line conditions return to an acceptable level and the motor has been totally cooled. Specific timing such as Start Up Delay (TC) and Trip Delay (TD) are incorporated to prevent nuisance tripping due to rapid power fluctuations.

MPA2 provides LCD Display to indicate the output status voltage, current, unbalance, frequency and load status and failure conditions. It also provides four (4) push buttons (1 for START, 2 for ADJUST and 1 for SELECT) for operation and protection parameters adjustment. Besides these mentioned advantages, a Communication Port with MODBUS RTU protocol is included with MPA2.

An innovative mechanical design allows two (2) placement options:

- Symmetrical Din-Rail mounting.
- Flat Surface mounting, using an exclusive attachable mounting ear.

MPA2 has been developed using the most advanced technology and designed in accordance with the IEEE, IEC and NEMA protection standards and developed in compliance with IEC electromagnetic compatibility standards, working safely under the hardest electrical environments.

When you use a MPA2 Motor Protection Analyzer, you are working with the best solution to protect your most important investments.

PRODUCT STANDARDS

Designed according to Ce Standards (LVD and EMC):

IEC	61010-1
IEC	60255-6
IEC	60255-8
IEC	60947-1

Designed according to:

UL 60947-4-1
IEEE C37.112

DIMENSIONS (INCHES/MILLIMETERS)

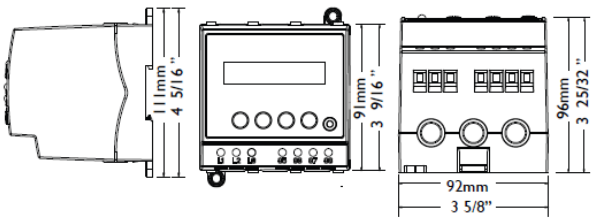

FUNCTIONS & RANGE OF APPLICATIONS

The MPA2 provides electrical protection through general functions and setting ranges for intended use listed as follows:

VOLTAGE DETECTION	Overvoltage: 5% up to 20% rated voltage
	Undervoltage: -20% up to -5% rated voltage
	Unbalance: 2% up to 10% rated voltage
	Single Phasing: (IN 33% - OUT 28%)
RECOVERY & DETECTION TIME	Start Up Delay after Voltage fault: 0 to 600 sec
	Voltage Fault detection time: 1 to 30 sec
	Phase Reversal detection time: <1 sec
FREQUENCY DETECTION	Frequency Shift: +/-2% up to +/-10% rated frequency
CURRENT DETECTION	Overcurrent: 5% up to 25%
	Undercurrent: Adjustable by PF or by I nominal
	Unbalance: CUB > 48 %
	Single Phasing: CUB > 60 %
POWER FACTOR DETECTION	Power Factor: 0.0 up to 1.0
THERMAL CLASS IEC 60255-8	Thermal Class: 5 to 30 (in step of one by one)

MODEL NUMBER

MODEL NUMBER	MPA2		
VOLTAGE			
208/220/240 V~		240	
440/480 V~		480	
AMPERAGE			
1-4 A			04
3.5-12.5 A			12
10-32 A			32
25-80 A			80
External Current Transformer			CT

ACCESSORIES	
Standard RS485 Communications Cable	MPA2-COM
Current Transformer 30/5 amp	CT30/5
Current Transformer 50/5 amp	CT50/5
Current Transformer 100/5 amp	CT100/5
Current Transformer 200/5 amp	CT200/5
Current Transformer 500/5 amp	CT500/5
Current Transformer 1000/5 amp	CT1000/5
STANDARD STOCK	
	MPA2-240-CT
	MPA2-480-32
	MPA2-480-80
	MPA2-480-CT
	MPA2-COM

PHYSICAL FEATURES

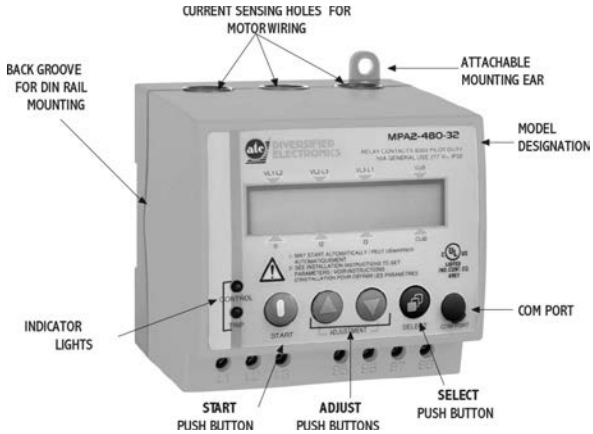

SAFETY INFORMATION

ATTENTION:

Only qualified technicians with knowledge about overload protection relay and associated machinery should do the installation, starting up, and maintenance of the system. Failure to comply may result in equipment damage and/or personal injury.

CONSIDERATION REGARDING EMC

NOTICE:

This product has been designed for industrial environments. Use of this product in residential enviroments may cause unwanted electromagnetic disturbances in which case the user may be required to take adequate mitigation measures. Failure to comply may result in equipment damage and/or personal injury.

C UL US
LISTED
E55826

Multi-Function Timer

- **13 Functions**
- **10 Time Ranges**
- **Front knobs for Time Range, Time Scale & Mode Setting**
- **Slim, Space Saving Design**
- **DIN Rail Mount**

DIMENSIONS (MILLIMETERS)

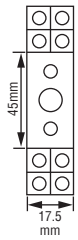

Symmetrical 35mm Din Rail (EN50022) Mounting

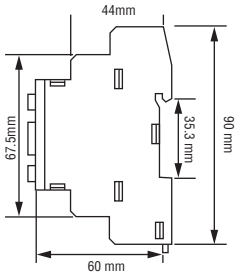

TERMINAL CONNECTIONS

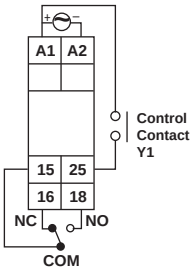

Cable Size (AWG): 16 ; Tightening Torque (Lb-inch): 4.5
Cable Size (mm^2): 1.5 ; Tightening Torque (N-m): 0.5

SPECIFICATIONS

ACCURACY	Setting: ±5% of F.S. Repeat: ±0.5% (F.S. = Full Scale)
RESET	Reset time < 100 msec
OUTPUT CONTACT	SPDT (1 C/O)
CONTACT RATING	N/O:5A@ 250V AC N/C:3A @ 250V AC
MODES	On delay (A) Interval (B) Cyclic equal OFF first (C) Cyclic equal ON first (Ci) Pulse output, 500ms fixed (D) Delay on break (E) Delay on make / Delay on break (F) Interval after break (H) Single shot (I) Retriggerable Single shot (J) Latching relay (K) Delay with Totalize (Ai) Interval with Totalize (Bi)
TIME RANGES	0.1 - 1 sec, 0.3 - 3 sec, 1-10 sec, 3-30 sec 0.1-1 min, 0.3-3 min, 1-10 min, 3-30 min 0.1-1 hr, 0.3-3 hr
SUPPLY VOLTAGE	20-240V AC, 12-240V DC AC : (50 / 60 Hz)
POWER CONSUMPTION	43.2VA max
TEMPERATURE	Operating: 0 to 50°C (32 to 122°F) Storage: -20 to 75°C (-4 to 167°F)
HUMIDITY (NON-CONDENSING)	95% RH
WEIGHT	0.163 lbs.
PROTECTION LEVEL	IP40 for Casing IP20 for Temrinals

ORDERING INFORMATION

PART NO.	SUPPLY VOLTAGE
175MU	20-240V AC/DC 12-240V DC

TIMING DIAGRAMS

Function: ON Delay (A)

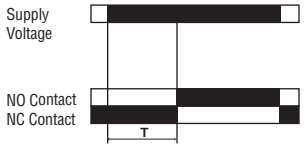

T = set time

Function: Interval (B)

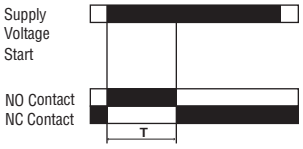

T = set time

Function: Cyclic Equal OFF First (C)

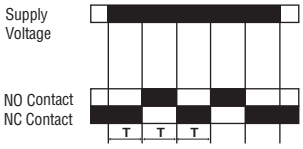

T = set time

Function: Cyclic Equal ON First (Ci)

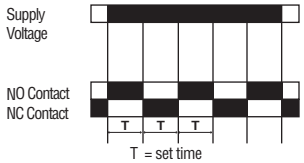

T = set time

Function: Pulse Output (D)

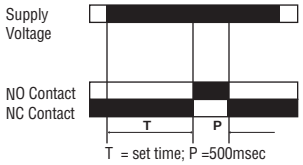

T = set time; P =500msec

Function: Delay On Break (E)

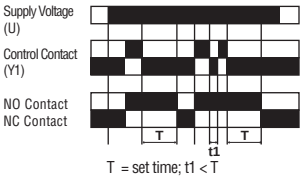

T = set time; t1 < T

Function: Delay On Make / Break (F)

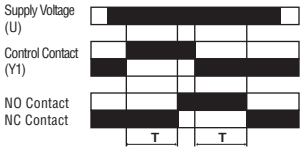

T = Set time

Function: Interval After Break (H)

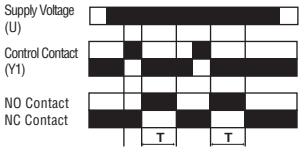

T = Set time

Function: Single Shot (I)

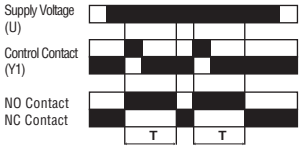

T = Set time

Function: Retriggerable Single Shot (J)

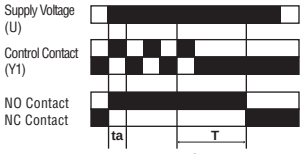

ta<T ; T = Set time

Function: Latching Relay (K)

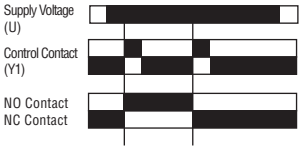

Function: Delay With Totalize (Ai)

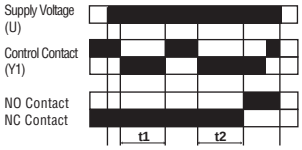

t1 + t2 = T ; T = Set time

Function: Interval With Totalize (Bi)

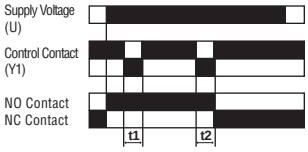

t1 + t2 = T ; T = Set time

C UL US
LISTED
IND. CONT. EQ.
496Y

Single Mode Timer

- **On Delay**
- **10 Time Ranges**
- **Front knobs for Time Range & Time Scale**
- **Slim, Space Saving Design**
- **DIN Rail Mount**

SPECIFICATIONS

ACCURACY	Setting: ±5% of F.S. Repeat: ±0.5% (F.S. = Full Scale)
RESET	Reset time < 100 msec
OUTPUT CONTACT	SPDT (1 C/O)
CONTACT RATING	N/O:5A @ 250V AC N/C:3A @ 250V AC
MODES	On delay (A)
TIME RANGES	0.1 - 1 sec, 0.3 - 3 sec, 1-10 sec, 3-30 sec 0.1-1 min, 0.3-3 min, 1-10 min, 3-30 min 0.1-1 hr, 0.3-3 hr
SUPPLY	110V AC : (50 or 60 Hz)
POWER CONSUMPTION	4.0 VA
TEMPERATURE	Operating: 0 to 50°C (32 to 122°F) Storage: -20 to 75°C (-4 to 167°F)
HUMIDITY (NON-CONDENSING)	95% RH
WEIGHT	2.151 oz.
PROTECTION LEVEL	NEMA 12

DIMENSIONS (MILLIMETERS)

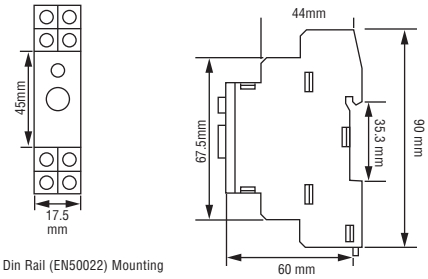

Symmetrical 35mm Din Rail (EN50022) Mounting

TIMING DIAGRAM

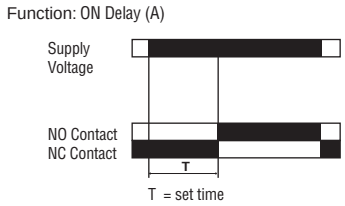

TERMINAL CONNECTIONS

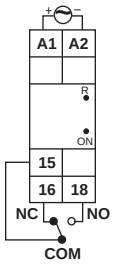

Cable Size (AWG): 16 ; Tightening Torque (Lb-inch): 4.5
Cable Size (mm^2): 1.5 ; Tightening Torque (N-m): 0.5

ORDERING INFORMATION

PART NO.	SUPPLY VOLTAGE
175SO-110	110V AC

SPECIFICATIONS

ACCURACY	Setting: ±0.1% of set time of ±50mSec Repeat: ±0.1%
RESET	Reset time < 100 msec, Front Key, Interruption of Power
OUTPUT CONTACT	SPDT (1 C/O)
CONTACT RATING	8A @ 250V AC
MODES	On delay (A) Interval (B) Asymmetrical cyclic OFF first (C) Asymmetrical cyclic ON first (D) Cyclic equal OFF first (E) Cyclic equal ON first (F) Pulse output (H) Delay on break (J) Delay on make/break (K) Interval after break (L) Single shot (P) Retriggerable Single shot (Q) Latching relay (R) Delay with Totalise (t) Interval with Totalise (U)
TIME RANGES	0 - 99.9 sec/min/hr 0 - 999 sec/min/hr 0 - 9:59 min:sec 0 - 9:59 hr:min
SUPPLY VOLTAGE	20-240V AC/DC AC : (50 / 60 Hz)
POWER CONSUMPTION	4 VA max
TEMPERATURE	Operating: 0 to 50°C (32 to 122°F) Storage: -20 to 75°C (-4 to 167°F)
HUMIDITY (NON-CONDENSING)	95% RH
WEIGHT	0.163 lbs.
PROTECTION LEVEL	IP40 for Casing IP20 for Terminals

ORDERING INFORMATION

PART NO.	SUPPLY VOLTAGE
175MD	20-240V AC/DC AC: 50/60Hz

C UL US
LISTED
E55826

Multi-Function Timer "With Display"

- **15 Functions**
- **8 Time Ranges**
- **Front Key Pad Setting**
- **Universal supply voltage**
- **Slim, Space Saving Design**
- **DIN Rail Mount**

DIMENSIONS (MILLIMETERS)

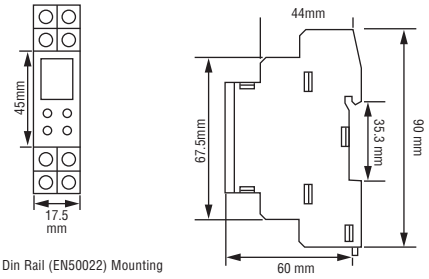

Symmetrical 35mm Din Rail (EN50022) Mounting

TERMINAL CONNECTIONS

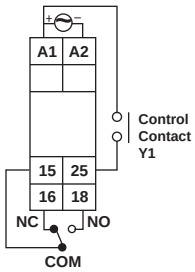

Cable Size (AWG): 16 ; Tightening Torque (Lb-inch): 4.5

Cable Size (mm²): 1.5 ; Tightening Torque (N-m): 0.5

TIMING DIAGRAMS

Function: ON Delay (A)

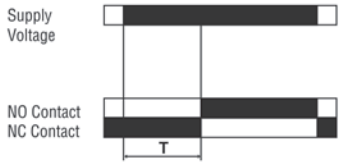

T = set time

Function: Interval (B)

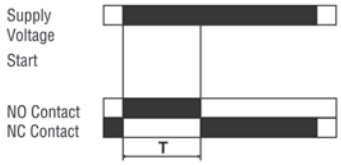

T = set time

Function: Asymmetrical Cyclic OFF First (C) *

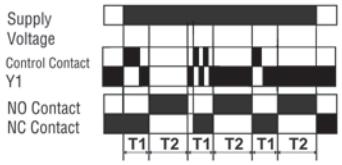

T1 = OFF time ; T2 = ON time

Function: Asymmetrical Cyclic ON First (D) *

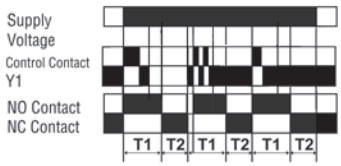

T1 = ON time ; T2 = OFF time

Function: Cyclic Equal OFF First (E)

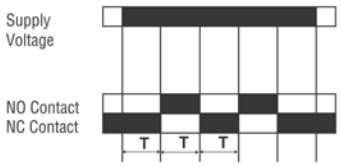

T = set time

Function: Cyclic Equal ON First (F)

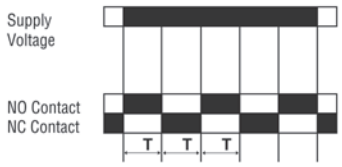

T = set time

Function: Pulse Output (H)

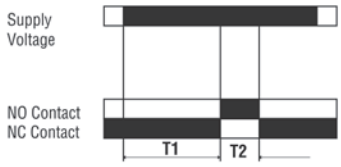

T1 = Off time ; T2 = On time

Function: Delay On Break (J)

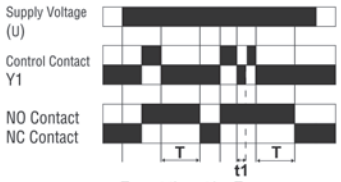

T = set time; t1 < T

Function: Delay On Make / Break (K)

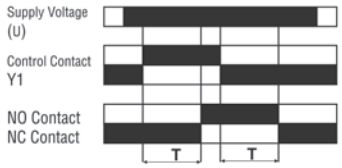

T = Set time

Function: Interval After Break (L)

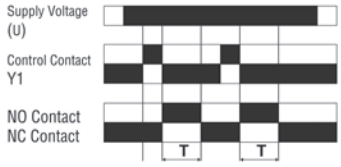

T = Set time

Function: Single Shot (P)

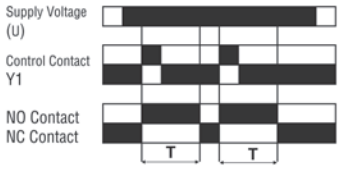

T = Set time

Function: Retriggable Single Shot (Q)

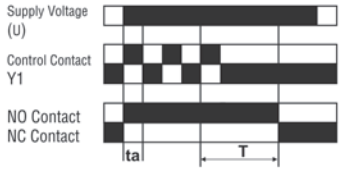

ta<T ; T = Set time

Function: Latching Relay (R)

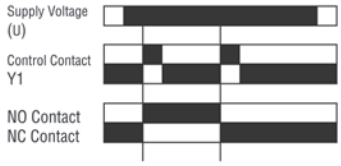

Function: Delay With Totalise (T)

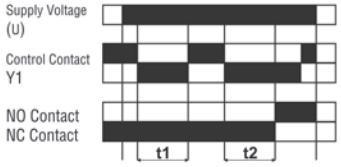

t1 + t2= T ; T = Set time

Function: Interval With Totalise (U)

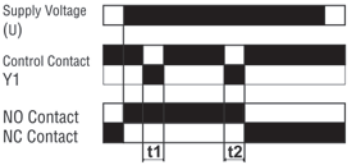

t1 + t2= T ; T = Set time

120 VAC
LISTED
7R59
Clock Oper. Sw.

240 VAC
E104697

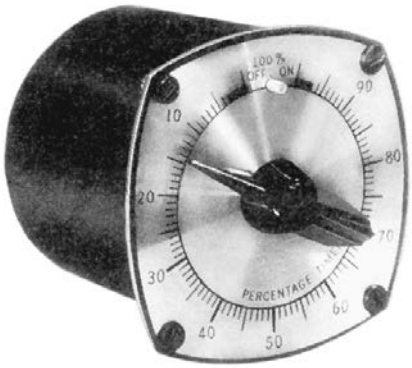

Percentage Timer

- Precise Fool-proof Operating Mechanism
- Three Time Ranges from Which to Choose
- Eliminates All Engaging Cams and Latches
- Minimal Panel Space Needed

For continuous ON-OFF control of electrical circuits, the CP Series single circuit repeat cycle timer is a continuous cycling control where the ON or circuit closure time is dial adjusted for a percentage of the total time cycle.

APPLICATIONS: Control of pumps, blowers, filters, heating equipment, industrial ovens, laboratory equipment and wherever ON or OFF control is desired as a percentage of the primary fixed total time cycle.

SPECIFICATIONS

TIME RANGES	15, 30, 60 MIN
TIMING MODE	Continuous ON-OFF
RANGE SETTING	3%-97%, Also 100% ON and OFF Points
SETTING ACCURACY	Within 2% of Full Scale
REPEAT ACCURACY	Within 1% of Full Scale
OUTPUT	SPST, 20A, 1/2 HP 120 VAC SPST, 20A, 1 HP 240 VAC
MOTOR VOLTAGES	120 VAC 50/60 Hz., 240 VAC, 50/60 Hz. (50 Hz. Units Will Be 1/6 Slower Than Listed Speeds.)
TERMINATION	Rear Screw Terminals
MOUNTING	Front Panel
TEMPERATURE RATING	32° to 120°F (0°to 50°C)
WEIGHT	1.4 lbs.

MODEL NUMBER

MODEL		CP
TIME RANGE	15 minutes	15M
	30 minutes	30M
	60 minutes	60M
VOLTAGE	120 VAC	A
	240 VAC	C

MODEL EXAMPLE:
CP-15M-A

DIMENSIONS

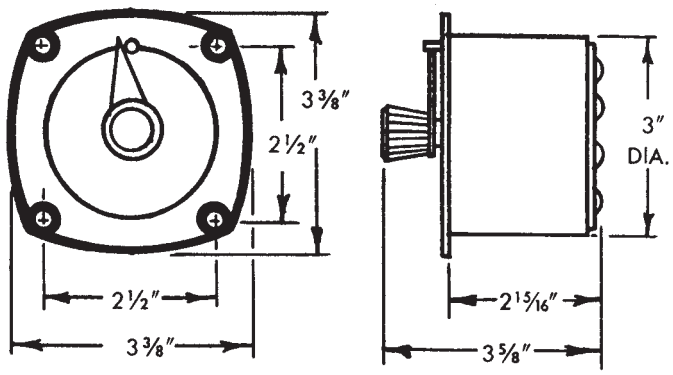

WIRING

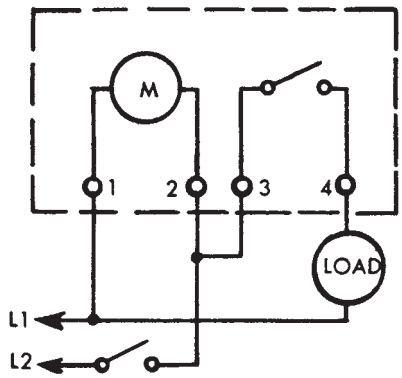

Easily the most rugged and dependable of industrial percentage timers, the ATC 304 incorporates heavy-duty contacts that are capable of switching loads as large as 4.6 KW directly.

LARGE CONTACTS: Self-cleaning silver contacts are 3/8 inch in diameter, larger than in any other make of percentage timer. They easily provide 1,000,000 operations at the full rated load of 25 A (non plug-in models).

RUGGED AND TROUBLE-FREE: Every component of the 304 has been refined and improved over the years to provide dependable operation for at least 3,000,000 cycles. Its classic simplicity of design makes it virtually trouble-free.

CONVENIENT ADJUSTMENT: Graduated in easily read 1% increments, the 304 provides continuous adjustment of on time between 5 and 95%. It also switches the load off continuously when the pointer is set below 3%; and on continuously, when the pointer is set above 98%.

E24305

Percentage Timer

SPECIFICATIONS

MODELS Choice of three:	304E plug-in 304E non-plug-in 304C non-plug-in
RANGES Choice of three standard ranges.	15 SEC @ 60 cycles (18 SEC @ 50 cycles) 30 SEC @ 60 cycles (36 SEC @ 50 cycles) 60 SEC @ 60 cycles (72 SEC @ 50 cycles)
REPEAT ACCURACY	± 0.1%
DIAL CALIBRATION	5 to 95% on time, in 1% graduations. FULL ON, FULL OFF FEATURE. When pointer is set below 3%, load switch contacts are open continuously, above 98%,contacts are closed continuously.
LOAD SWITCH	One SPST(quick make, quick break) switch with self-cleaning heavy-duty silver contacts.
CONTACT RATINGS	304C 25A at 120 VAC 20A at 240 VAC 304E 15A at 120 or 10A at 240 VAC plug-in unit. Non-plug-in unit same as 304C
POWER REQUIREMENTS	120 or 240V, 50/60 Hz; 50 mA running current.
TERMINALS	4 screw terminals accessible at rear; wiring diagram on housing.
TEMPERATURE RATING	32° to 120°F (0°to 50°C)
WEIGHT	NET: 1 lb., 2 oz. SHIPPING: 1 lb., 7 oz.

OPERATION

The 304 is available in a choice of 15, 30 and 60-second time cycles (60 Hz). Its synchronous motor drives a cam which repeatedly closes the SPST load switch for a percentage of the time cycle, as set on the timer dial, and opens it for the remainder of the cycle.

When the dial pointer is set below 3%, the load switch stays open for the full cycle; it remains closed when the pointer is set above 98%. An optional Hold switch also disconnects power to the timer motor when the pointer is set below 3%.

Series 304 timers operate continuously and do not reset on power interruption; when power is restored, they resume the interrupted cycle.

TYPICAL APPLICATIONS: Ideal for controlling wattage input to electrically heated equipment, the 304 non-plug-in models can pulse loads up to 4.6 KW directly through the SPST load switch; the plug-in models can switch up to 2.3 KW loads directly.

The 304 can be used with other types of electrical equipment to control the ratio of on time and off time in a fixed time cycle. In many types of ratio and cascade control systems, the 304 provides rate-of-rise set point drive control; special dial calibrations are available for this application.

MODEL NUMBER

MODEL NUMBER		304E
RANGE	15 SEC @ 60 Hertz (18 SEC @ 50 Hertz)	004
	30 SEC @ 60 Hertz (36 SEC @ 50 Hertz)	006
	60 SEC @ 60 Hertz (72 SEC @ 50 Hertz)	007
	Special	000
VOLTAGE & FREQUENCY		
	120 VAC	A
	240 VAC	B
	Special	K
DIAL CALIBRATION		
	Standard 0 to 100% Dial	00
	Special	99
FEATURES		
	Standard plug-in timer	P
	Standard non-plug-in timer	X
	STANDARD	X
	Special	K

MODEL NUMBER		304C
RANGE	15 SEC @ 60 Hertz (18 SEC @ 50 Hertz)	004
	30 SEC @ 60 Hertz (36 SEC @ 50 Hertz)	006
	60 SEC @ 60 Hertz (72 SEC @ 50 Hertz)	007
	Special	000
VOLTAGE & FREQUENCY		
	120 VAC	A
	240 VAC	B
	Special	K
DIAL CALIBRATION		
	Standard 0 to 100% Dial	00
	Special	99
FEATURES		
	Metal Dial	X
STANDARD UNIT/NON-PLUG-IN		X
	Special	K

DIMENSIONS (INCHES/MILLIMETERS)

304E PLUG-IN

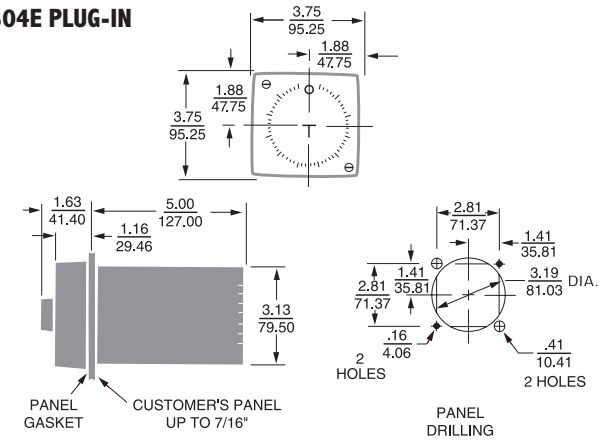

304E NON-PLUG-IN

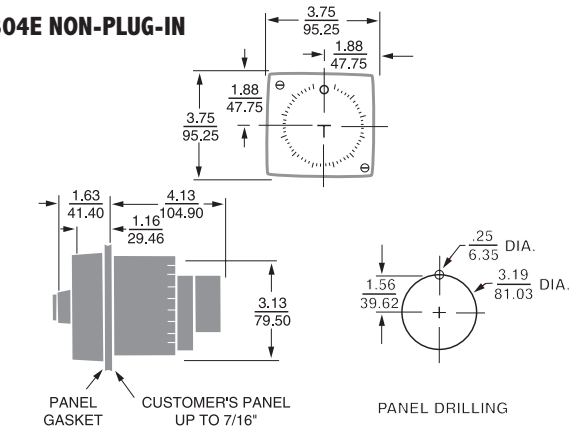

304C NON-PLUG-IN

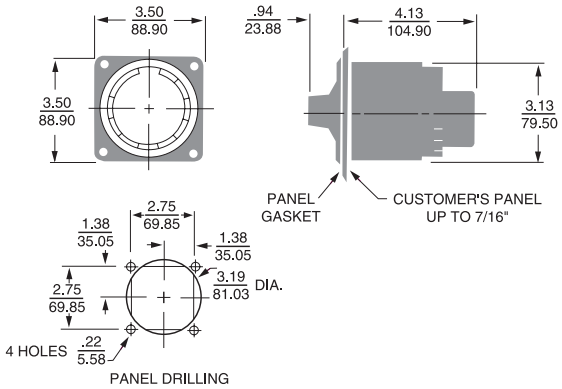

The 304G solid-state percentage timer comes standard in a 120 SEC range with 15 SEC, 30 SEC, 60 SEC user configurable ranges. Additionally, all second ranges can become minute ranges by changing jumper J11 . The 304G is easily panel mounted with 4 screws. It utilizes an integrated circuit technology for high accuracy timing.

CONTACTS: The relay contact is capable of switching 10 A to a resistive 120 VAC or 30 VDC load. It is capable of driving a 1/3 HP load at 120 VAC.

CYCLE PROGRESS INDICATION: The 304G has a pilot light that is on solid during the relay off time. It blinks at a faster rate during the relay on time: once every 3.5 seconds during the first 10% of the cycle, twice during the second 10% and so on.

HIGH ACCURACY: The 304G's timing circuit is not a simple RC circuit. It utilizes the sophistication of a proprietary integrated circuit that includes counting technology along with a stable oscillator to provide repeatable time delays.

CONVENIENT ADJUSTMENT: Graduated in easily read 1% increments, the 304G provides continuous adjustment of on time between 5 and 95%.

C UL US
LISTED
IND. CONT. EQ.
101F
E48329

Solid-State Percentage Timer

OPERATION

The 304G comes standard in the 120 SEC range but is user configurable for the 15 SEC, 30 SEC or MIN., 60 SEC or MIN. by changing jumpers on the PC board. Each of these ranges can also be made minutes range by changing a jumper. Its solid-state circuitry repeatedly closes the SPST load switch for a percentage of the time cycle, as set on the timer dial, and opens it for the remainder of the cycle.

When the dial pointer is set below 3%, the load switch stays open for the full cycle; it remains closed when the pointer is set above 98%. This is true for all seconds ranges. Minute ranges have a 0.01% minimum.

If power is interrupted to the timer it will reset. When power is restored, the timer will begin a new time cycle.

MODEL NUMBER

MODEL NUMBER	304G		Q	00	
RANGE					
Multi-range, Jumper Selectable* 15/30/60/120 SEC or MIN *Factory Set to 120 Sec Range		400			
15 SEC		004			
30 SEC		006			
60 SEC		007			
VOLTAGE & FREQUENCY					
120 VAC, 50/60 Hz			Q		
DIAL CALIBRATION					
Standard				00	
FEATURES					
Standard					XX
Special					XK

SPECIFICATIONS

MODEL	304G Non Plug-In
CONTACT RATINGS (non-inductive)	10A at 120 VAC
TEMPERATURE RATING	32° to 120°F (0° to 50°C)
SETTING ACCURACY	±5% of range 5 to 95% on time, in 1% graduations. FULL ON, FULL OFF FEATURE. When pointer is set below 3%, load switch contacts are open continuously; above 98%, contacts are closed continuously in all seconds ranges. Minute ranges have a 0.01% minimum.
RANGES	Standard 120 SEC range three configurable ranges of 15 SEC, 30 SEC, 60 SEC, 15 MIN, 30 MIN, 60 MIN and 120 MIN.
LOAD RELAY	One SPST Relay 10 Amp @ 120 VAC
POWER REQUIREMENTS	120V, 50/60 Hz; 50mA running current.
TERMINALS	4 screw terminals accessible at rear; wiring diagram on housing
WEIGHT	Net: 5.6 oz.
SHIPPING:	1 lb.

DIMENSIONS (INCHES)

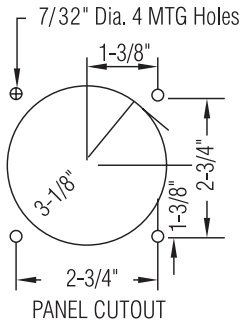

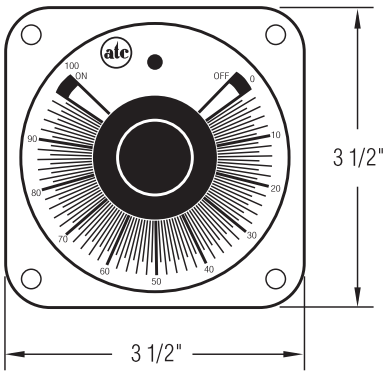

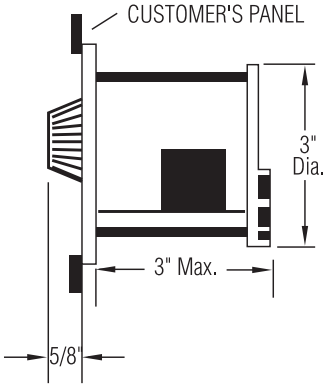

WIRING

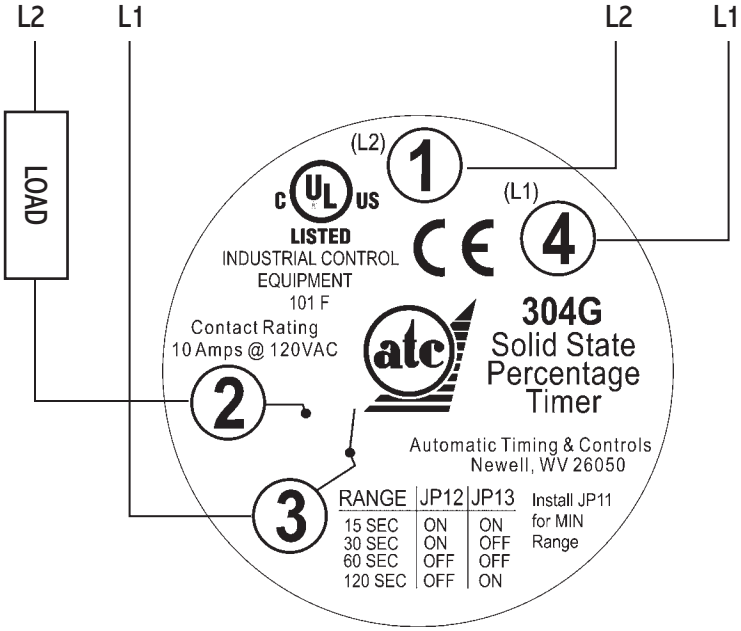

REAR VIEW OF TIMER

CHART 1

*Range of Configuration

Range	JP12	JP13
15 SEC	ON	ON
30 SEC	ON	OFF
60 SEC	OFF	OFF
120 SEC	OFF	ON

*For same minute ranges, install JP11

Examples:

1. Jump JP13, No Jump JP11, JP12, make a 120 SEC range.
2. Jump JP11, No Jump JP12, JP13, make a 60 minute range.

USER CONFIGURATION

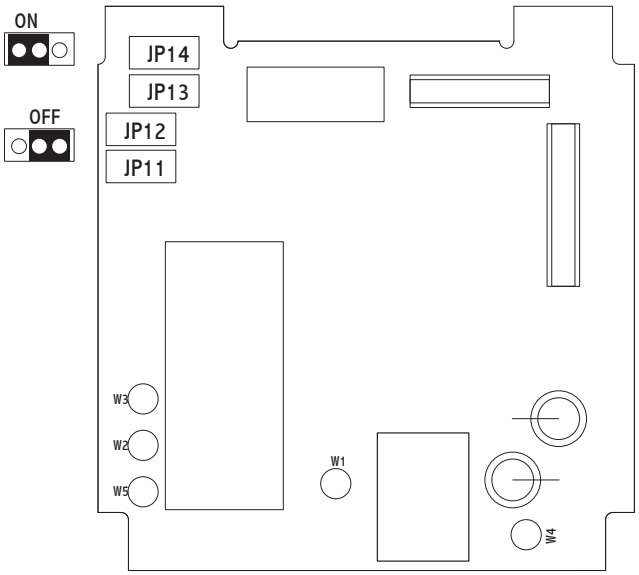

The operation of the new 304GX Percentage Timer is similar to the 304G with several noteworthy enhancements. The accuracy of the 304GX has been improved to 1% of range. With the Cycle Progress Memory feature, when power is removed and restored during the cycle, the 304GX will continue the cycle without resetting. The latching relay only changes state when the cycle reaches the set point or the end of the cycle.

CONTACTS: The relay contact is capable of switching 10 A to a resistive 120 VAC or 30 VDC load. It is capable of driving a 1/3 HP load at 120 VAC.

CYCLE PROGRESS INDICATION: The 304GX has a pilot light that is on solid during the relay off time. It blinks at a faster rate during the relay on time: once every 3.2 seconds during the first 10% of the cycle, twice during the second 25% and so on.

HIGH ACCURACY: The 304GX's timing circuit is not a simple RC circuit. It utilizes the microprocessor that includes counting technology along with a stable crystal oscillator to provide repeatable time delays.

CONVENIENT ADJUSTMENT: Graduated in easily read 1% increments, the 304GX provides continuous adjustment of on time between 1 and 99%.

C UL US
LISTED
IND. CONT. EQ.
101F
E48329

Solid State Percentage Timer

OPERATION

The 304GX comes standard in the 60 SEC range but is user configurable for the 15 SEC, 30 SEC, 120 SEC or MIN by jumpers from the PC board. Each of these ranges can also be made minutes range by a jumper. Its solid-state circuitry repeatedly closes the SPST load switch for a percentage of the time cycle, as set on the timer dial, and opens it for the remainder of the cycle.

When the dial pointer is set below 1%, the load switch stays open for the full cycle; it remains closed when the pointer is set above 99%. This is true for all seconds and minutes.

If power is interrupted, the 304GX timer will not reset and the relay state will not change. When power is restored, the timer will continue the interrupted cycles.

MODEL NUMBER

MODEL NUMBER	304GX		Q	00	
RANGE					
Multi-range, Jumper Selectable* 15/30/60/120 SEC or MIN *Factory Set to 120 Sec Range		400			
15 SEC		004			
30 SEC		006			
60 SEC		007			
VOLTAGE & FREQUENCY					
120 VAC, 50/60 Hz			Q		
DIAL CALIBRATION					
Standard				00	
FEATURES					
Standard					XX
Special					XK

SPECIFICATIONS

MODEL	304GX Non Plug-In
CONTACT RATINGS (non-inductive)	10A at 120 VAC
TEMPERATURE RATING	32 to 120°F (0 to 50 C)
SETTING ACCURACY	±1% of range 1% to 99% on time, in 1% graduations. FULL ON, FULL OFF FEATURE. When pointer is set below 1%, load switch contacts are open continuously; above 99%, contacts are closed continuously in all seconds ranges. Minute ranges have a 0.01% minimum.
RANGES	Standard 120 SEC range three configurable ranges of 15 SEC, 30 SEC, 60 SEC, 15 MIN, 30 MIN, 60 MIN and 120 MIN.
LOAD RELAY	One SPST Relay 10 AMP @ 120 VAC
POWER REQUIREMENTS	120V, 50/60 Hz; 50mA running current
TERMINALS	4 screw terminals accessible at rear; wiring diagram on housing
WEIGHT	Net: 5.6 oz.
SHIPPING:	1 lb.

DIMENSIONS (INCHES)

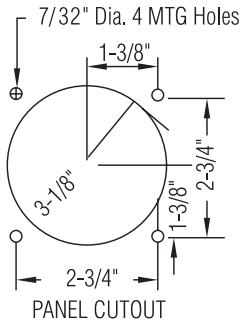

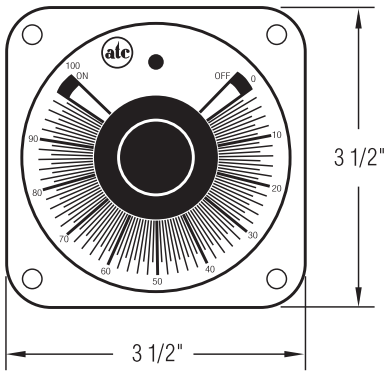

WIRING

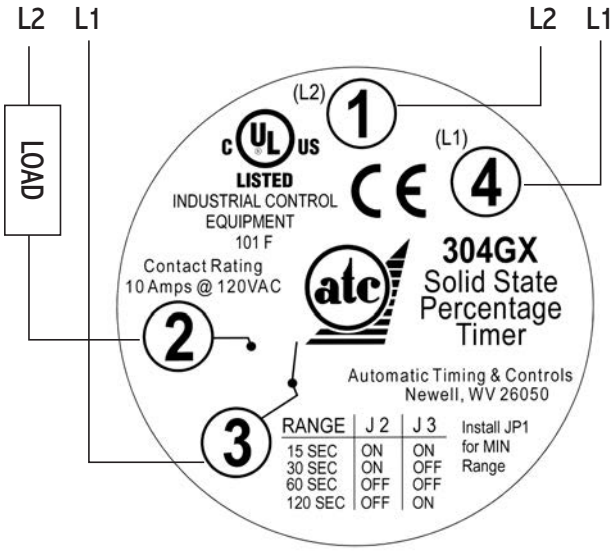

REAR VIEW OF TIMER

CHART 1
*Range of Configuration

Range	J2	J3
15 SEC	ON	ON
30 SEC	ON	OFF
60 SEC	OFF	OFF
120 SEC	OFF	ON

*For same minute ranges, jump J1

Examples:
1. Jump J3, No Jump J1, J2 make a 120 SEC range.
2. Jump J1, No Jump J2, J3, make a 60 minute range.

USER CONFIGURATION

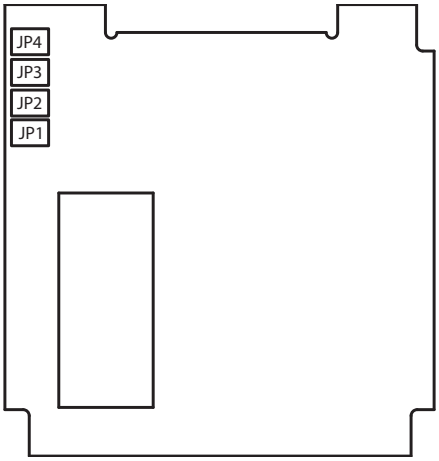

Noted for its circuit flexibility, the **305** also provides the highest accuracy among analog timers. Available for either ON-Delay or OFF-Delay operation.

The 305 provides delay, interval or pulse timing function for up to 7 load circuits through two instantaneous and two delayed switches. It features a plug-in design and cycle progress indication.

HIGHEST ACCURACY: Because of its exclusive infinite engagement clutch, the 305 has a repeat accuracy of 0.2%, highest of any timer in its class.

PLUG-IN AND DUST-TIGHT DESIGN: By virtue of its true plug-in design, the body of a 305 can be replaced in seconds without disturbing the housing or disconnecting the wiring. Its gasketed dial assembly forms a dust-tight seal against the housing, whether panel or surface-mounted.

FASTEST RESET: All 305 timers reset to a full-scale setting within 0.1 second, proportionately faster for shorter settings.

CIRCUIT FLEXIBILITY: All the contacts of its two instantaneous and two delayed load switches are externally accessible at a 14 point terminal block.

LONGEST LIFE: With an average mechanical life expectancy of over 5,000,000 operations before the first failure, the 305 is the leader in its class.

PILOT LIGHT: A built-in pilot light indicates that the timer is running.

OPERATION

The 305 is a synchronous motor-driven timer with an electrically-operated clutch equipped either for ON-Delay or OFF-Delay operation.

ON-DELAY: When power is applied (start signal on), the clutch solenoid is energized. Two things happen immediately and simultaneously, the instantaneous switches transfer from one set of contacts to the other, and the motor begins to drive the cycle progress pointer toward zero.

At the end of the timed period, the pointer trips one of the delayed switches, a brief time later (about 1/2% of full scale), the other delayed switch is tripped, stopping the timer motor but leaving the clutch engaged. The timer does not reset until power to the clutch is removed.

OFF-DELAY: Timing starts when power is removed (start signal off), from the spring-loaded, normally engaged clutch. The timer is reset when power is restored to the clutch solenoid; simultaneously, the instantaneous contacts are tripped. Action of the delayed contacts is the same as with ON-Delay timers. A power outage stops the motor but does not reset the OFF-Delay 305E.

E24305

Motor-Driven Analog Reset Timer

SWITCH	CONTACTS	ON DELAY Timing Sequence** Before Start	During Cycle	*	End of Cycle *
Instantaneous	14-9/6-8				
	14-10/6-7				
Delayed (D_2)	11-12				
	11-13				
Delayed (D_1)	4-5				
	4-3				

* D_2 trips approximately 1/2% of range after end of cycle.

** Assumes a sustained closed start signal (i.e. longer than the dial set time).

SWITCH	CONTACTS	OFF DELAY Timing Sequence** Before Start	During Cycle	*	End of Cycle *
Instantaneous	14-9/6-8				
	14-10/6-7				
Delayed (D_2)	11-12				
	11-13				
Delayed (D_1)	4-5				
	4-3				

* D_2 trips approximately 1/2% to 5% of range after end of cycle.

** Assumes a sustained closed start signal (i.e. longer than the dial set time).

BLACK Circuit Closed

GRAY Circuit Open

DIMENSIONS (INCHES/MILLIMETERS)

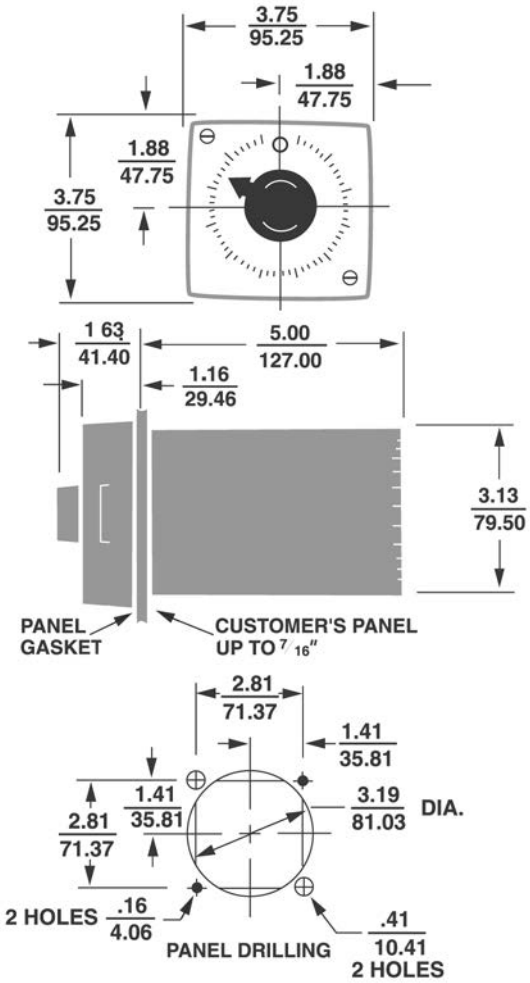

WIRING

AC WIRING

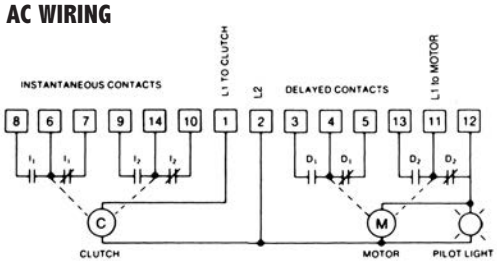

TERMINAL WIRING

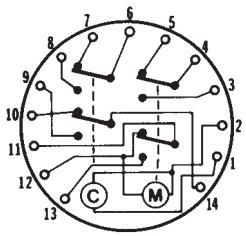

SPECIFICATIONS

MODELS	ON-Delay OFF-Delay
RANGES (AC)	13 standard ranges, from 6 SEC to 60 HRS at 60 Hz.
REPEAT ACCURACY	AC MODELS: – 0.2% of full scale (For ranges of 60 SEC or less, it may be necessary to run timer motor before start to achieve related accuracy)
RESET TIME	0.1 SEC, full scale
MIN. SETTING	1/60th of range (all models except 0.3 SEC for 6 SEC model)
DIAL DIVISIONS	6 SEC, 60 SEC, 120 SEC, 240 SEC, 60 MIN, 240 MIN, 6 HR, and 60 HR =120 Dial Divisions 30 SEC, 15 MIN, 30 MIN, 15 HR., and 30 HR =150 Dial Divisions
LIFE EXPECTANCY	MECHANICAL: over 5,000,000 operations CONTACTS: 3,000,000 operations under resistive or inductive load of 1A
TIMING MOTOR	Synchronous, permanently lubricated
TIMING	Single cycle interval or delay
LOAD SWITCHES	INSTANTANEOUS: two, each SPDT; self cleaning, heavy-duty silver contacts. DELAYED: two, each SPDT; precision type, silver contacts CONTACT RATING (non-inductive): 10 amps, 120 VAC
PILOT LIGHT	Wired in parallel with motor.
TERMINALS	14 screw terminals accessible at rear; integral wiring diagram on timer housing.
HOUSING	Plug-in design; completely gasketed, dust-tight when surface or panel-mounted
POWER REQUIREMENTS	AC MODELS: 120, 60Hz (all ranges), (– 10%, - 10%) AC MODELS: running current 0.128 A (115 VAC) inrush current 0.628 A (115 VAC)
TEMPERATURE RATING	32° to 140°F (0° to 60°C)
WEIGHT	NET: 2 lb., 6 oz. SHIPPING: 2 lb., 12 oz.
MOUNTING ACCESSORIES	STANDARD: Hardware is provided to mount timer so that it is dust-tight from front of panel. OPTIONAL: Surface mounting with rear-facing terminals. (See Accessories)

MODEL NUMBER

RANGE-60 CYCLES 120 VAC

6 SEC	101
30 SEC	006
60 SEC	007
120 SEC	008
240 SEC	011
15 MIN	015
30 MIN	016
60 MIN	017
240 MIN	019
6 HR	030
15 HR	021
30 HR	022

VOLTAGE FREQUENCY

120/60	A

MODEL NUMBER	305E				0		
RANGE							
VOLTAGE & FREQUENCY							
ARRANGEMENTS							
ON-DELAY (reset on power interruption)				1			
OFF-DELAY (non-reset on power interruption)				2			
Special				0			
SETTING							
Knob					0		
FEATURES							
Basic plug-in timer						P	
Standard Timer						X	
Basic standard unit							X
Special							K

ACCESSORIES:

Surface mounting bracket rear facing terminals 0305-263-64-00

TYPICAL INSTALLATIONS

- C — CLUTCH SOLENOID
- M — MOTOR
- ○ — INDEPENDENT LOADS
- ● — DEPENDENT LOADS
- MOMENTARY STARTING CONTACT
- SUSTAINED STARTING CONTACT
- X — LOAD ENERGIZED
- O — LOAD DE-ENERGIZED

All timers shown in "before start" position. Diagrams shown with power off unless otherwise marked.

Maximum load current through any load carrying contact is 10 amperes.

ON-DELAY - Reset on power failure.

OFF-DELAY - Non-reset on power failure.

DELAYED CONTACTS
Switch 4-5-3 transfers at dial "0." Switch 11-12-13 transfers 1% later.

INSTANTANEOUS CONTACTS
Contacts are transferred when clutch is energized; transferred back, as shown when de-energized.

SUSTAINED START (ON DELAY)

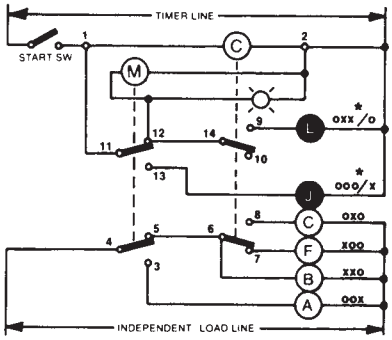

MOMENTARY START (ON DELAY)

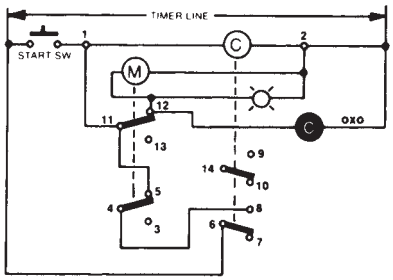

OFF DELAY

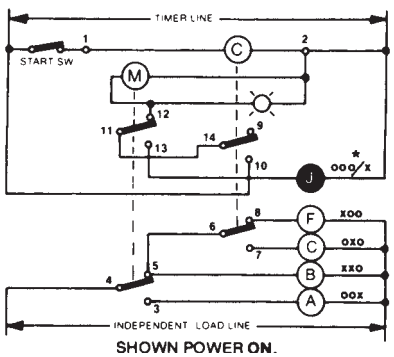

SHOWN POWER ON.

E24305

FM APPROVED

Motor-Driven Cycle Progress Timer

SPECIFICATIONS

MODEL	Choice of ON-Delay or OFF-Delay operation (not field-convertible)
RANGES	11 standard ranges, from 5 SEC to 5 HRS at 60Hz (6 SEC to 6 HRS at 50 Hz)
REPEAT ACCURACY	– 2% of dial range.
RESET TIME	150 ms.
MIN. SETTING	5% of dial range.
LIFE EXPECTANCY	MECHANICAL: 2,500,000 cycles (average) CONTACTS: 2,500,000 operations under resistive or inductive load of 1A
TIMING MODES	SINGLE CYCLE: interval, delay or pulse.
LOAD SWITCHES	INSTANTANEOUS: one, SPDT, precision type. DELAYED: two, SPDT, precision type. CONTACT RATINGS (non-inductive): 10 A at 120 VAC 5 A at 240V A C
TERMINALS	11-point terminal block on side of housing; all terminals accept .250" push-on connectors. Terminals 1, 2, 4, 9 and 11 are split connectors for use with either one .250" or two .110" push-on connectors.
POWER REQUIREMENTS	120, 50 or 60 Hz. (±10%, - 15%) Running Current 121 mA (14.5 VA) at 120V Inrush Current 157 mA (18.9 VA) at 120V
TEMPERATURE RATING	32° to 120°F (0° to 50°C)
WEIGHT NET: 1 lb. 8 oz	**SHIPPING**: 2 lbs.

NOTE: Some timing ranges are still available at 240VAC. Check with ATC.

A Dial-Adjustable TDR with cycle progress indication, the ATC 322 can also be used as a low-cost automatic reset timer for a wide range of interval, delay and pulse timing functions, in either ON-delay or OFF-delay operation.

COST EFFECTIVE VERSATILE TIMING FUNCTIONS: The 322 provides the versatile timing functions and features of much more expensive automatic reset timers.

INSTANTANEOUS AND DELAYED LOAD SWITCHES: Because the standard 322 includes an instantaneous switch as well as two delayed switches, it can be used in the On-Delay mode for interval and/or delayed control, with either a momentary or sustained start signal. All three switches are mounted on a sliding deck which facilitates replacement and maintenance.

SURFACE OR FLUSH MOUNT: The 322 is provided with hardware for surface mounting or, if desired, flush mounting through a single 15/16" OD cutout in a 1/8" panel.

CYCLE PROGRESS INDICATION: A pointer in the dial knob rotates during the cycle, continuously showing the time remaining until time-out.

OPERATION

The 322 is a synchronous motor-driven timer with an electrically-operated clutch equipped either for On-Delay or Off-Delay operation.

ON-DELAY: When power is applied (start signal sustained on), the clutch engages, the motor begins to drive a cam toward its zero position, and the instantaneous switch transfers from one set of contacts to the other. At the end of the timed period, the cam trips one of the delayed switches, but the motor continues to run. A brief time later (about 2-1/2% to 5% of full scale), the cam trips the second delayed switch, stopping the motor but leaving the clutch engaged. The 322 resets when power is removed from the clutch.

OFF-DELAY: Timing begins when power is removed (start signal off) from the spring-loaded, normally-engaged clutch. The timer resets when power is restored to the clutch, thus disengaging it and transferring the instantaneous switch from one set of contacts to the other. Action of the delayed contacts is the same as with the On-Delay timer. A power outage stops the motor but does not reset the Off-Delay 322; the timer completes the interrupted cycle when power is restored.

WIRING

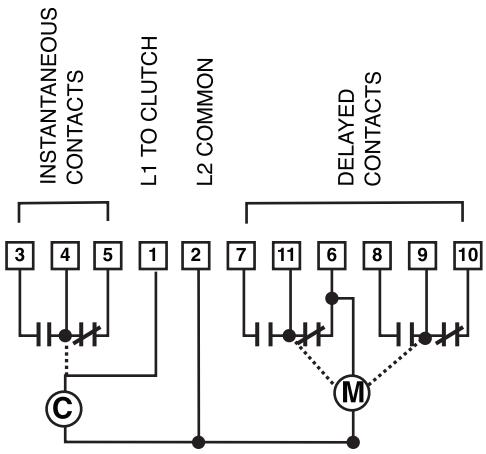

RANGE - 60HZ- 120 VAC

5 SEC	114
10 SEC	003
20 SEC	005
40 SEC	115
60 SEC	007
150 SEC	009
5 MIN	012
10 MIN	014
40 MIN	056
60 MIN	017
5 HR	113

RANGE - 50 HZ - 120 VAC

6 SEC	101
12 SEC	116
24 SEC	117
48 SEC	118
72 SEC	073
180 SEC	119
6 MIN	029
12 MIN	047
48 MIN	058
72 MIN	061
6 HR	030
Special	000

VOLTAGE FREQUENCY

120/60	A
120/50	C
Special	K

MODEL NUMBER

MODEL NUMBER	322B				2	
RANGE						
VOLTAGE & FREQUENCY						
ARRANGEMENTS						
ON-DELAY (reset on power interruption)				1		
OFF-DELAY (non-reset on power interruption)				2		
Special				0		
SWITCH DIFFERENTIAL						
2-1/2% - 5% of dial range					2	
FEATURES						
STANDARD surface mounting unit, clutch contact						CS
SPECIAL						CK

DIMENSIONS (INCHES/MILLITERS)

SURFACE MOUNTING OF TIMER

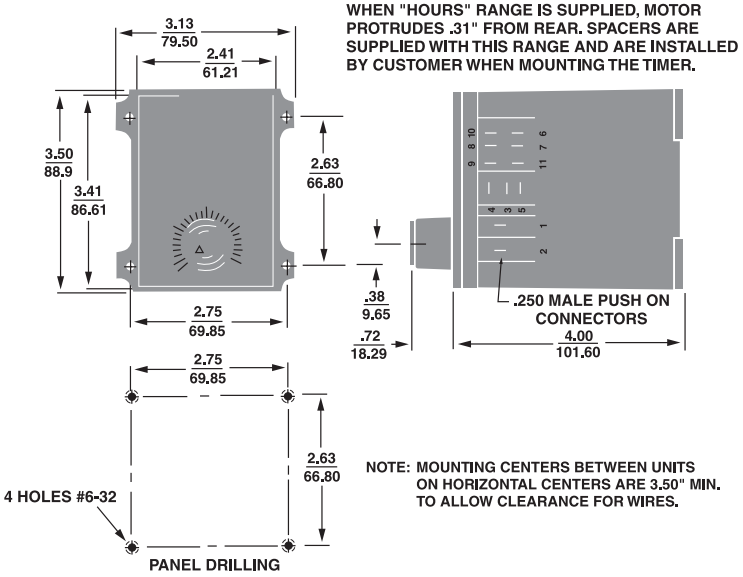

FLUSH MOUNTING OF TIMER

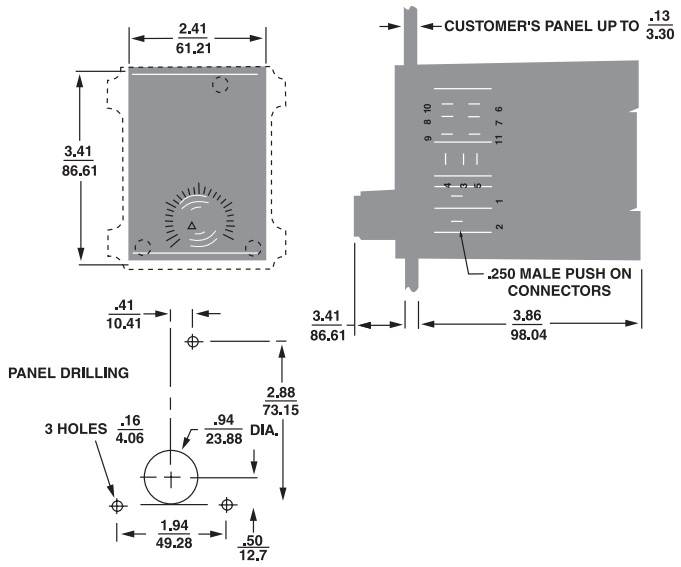

SWITCH	CONTACTS	ON DELAY Timing Sequence** Before Start	During Cycle	*	End of Cycle *
Instantaneous	4-3	GRAY	BLACK	BLACK	BLACK
	4-5	BLACK	GRAY	GRAY	GRAY
Delayed (D_2)	11-6	BLACK	BLACK	BLACK	GRAY
	11-7	GRAY	GRAY	GRAY	BLACK
Delayed (D_1)	9-10	BLACK	BLACK	GRAY	GRAY
	9-8	GRAY	GRAY	BLACK	BLACK

BLACK Circuit Closed

GRAY Circuit Open

* D_2 trips approximately 2-1/2% of range after end of cycle.

** Assumes a sustained closed start signal (i.e. longer than the dial set time).

SWITCH	CONTACTS	OFF DELAY Timing Sequence** Before Start	During Cycle	*	End of Cycle *
Instantaneous	4-3	BLACK	GRAY	GRAY	GRAY
	4-5	GRAY	BLACK	BLACK	BLACK
Delayed (D_2)	11-6	BLACK	BLACK	BLACK	GRAY
	11-7	GRAY	GRAY	GRAY	BLACK
Delayed (D_1)	9-10	BLACK	BLACK	GRAY	GRAY
	9-8	GRAY	GRAY	BLACK	BLACK

* D_2 trips approximately 2-1/2% to 5% of range after end of cycle.

** Assumes a sustained closed start signal (i.e. longer than the dial set time).

E104697

Interval Timer

SPECIFICATIONS

TIME RANGES	30, 60 MIN 5 HR
TIMING MODE	Interval
SETTING ACCURACY	Within 0.5% of Full Scale
OUTPUT	SPDT, 15A, 120 VAC Resistive
MOTOR VOLTAGES	120 VAC, 60 Hz.
DISPLAY	Dial
TEMPERATURE RATING	32° to 120°F (0° to 50°C)
TERMINATION	Rear Terminal Block-Screw
MOUNTING	400 Series: Front Panel
WEIGHT	1.30 lb.

MODEL NUMBER

MODEL NUMBER		
BASIC TYPE: OPEN UNIT		4
RANGE	0-30 MIN	06
	0-60 MIN	07
	0-5 HRS	09
VOLTAGE & FREQUENCY		
	120 VAC, 60 Hz	A
	WITHOUT FACE PLATE	S

OPERATION

The pointer is manually set to the desired time. At the instant the knob is turned from zero, the switch MS closes and load A is energized. After the set time has elapsed, the load is de-energized and the timer stops at zero. There is a terminal connection, (terminal 4) load B, for an end of cycle light and/or audible signal. A toggle switch can be furnished as added equipment which allows setting of the time before actuating the load. This provides a means of more accurate time settings. This toggle switch (time start and signal stop) will also turn off the end of cycle signal.

APPLICATIONS: Designed to control an electrical circuit for a set time upon operation of the manual setting knob which is directly connected to the switch operating cam. To assure positive setting action, this timer does not set through a clutch. Calibrated dial settings are available in ranges from 1 minute to 24 hours. Designed for control of any electrically operated equipment or operation, such as processing machinery, plastic molding, laundry and dry cleaning machinery, electric ovens and furnaces, photographic equipment, or wherever accurately timed control of electrical operation is critical.

DIMENSIONS (INCHES)

Series	H	W	D*	DWT
400	4-1/2	2-7/8	2-1/4	1-1/4 lbs.

*Add 3/4" for knob.

WIRING

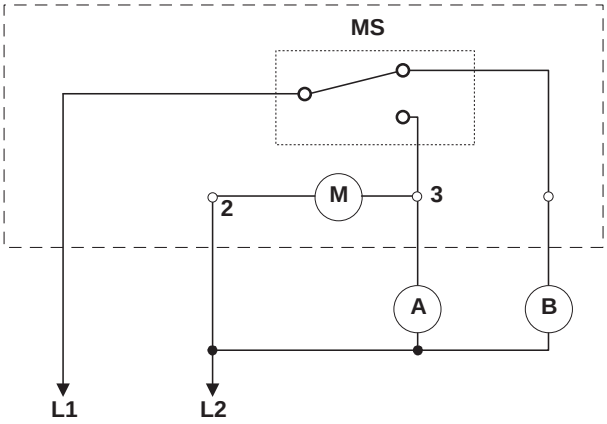

A compact and motor-driven cam timer, the 324 precisely controls one to twelve load circuits through easily-set screwdriver adjustable cams. Each timer provides a wide range of cycle times through a set of interchangeable gears.

EASY AND PRECISE CAM ADJUSTMENT: With ATC's unique split-cam design, each side of the cam is separately screwdriver-adjustable in either direction: either side determines the precise instant during the cycle when the switch will actuate, the other side determines how long the switch will remain actuated. Adjustments are easy and precise: 1/4 turn of the adjusting screw equals 0.5% of cycle time. A setting disc, calibrated in 1% increments, facilitates program set-up and indicates cycle progress.

ONE TO TWELVE PRECISION SWITCHES: Whether used as a time or sequence programmer, the 324 can be ordered with any number of cam-operated switches from one to twelve. Each SPDT precision switch is rated at 10 amps, 120 VAC and is 1/3 hp rated at 120 or 240 VAC.

WIDE RANGE OF CYCLE TIMES: The 324 is available with a variety of synchronous motors. See charts for available timing ranges. Each motor provides an adjustable range of cycle times, with a ratio of over 2.5:1, through a set of interchangeable gears. Changing gears is a simple operation that takes only a few minutes.

ACCURACY: The repeat accuracy and setting accuracy of the 324 are both within ± 0.25%. Follower fingers precisely track the contour of the cams, accurately operating the precision switches with quick-break action.

SEQUENCE CONTROL: The 324 can be ordered without a motor and with a 1 inch long shaft extension on either or both ends, for use as a rotary cam limit switch.

E24305

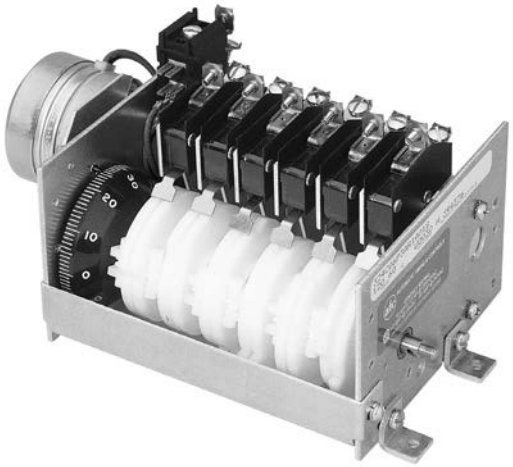

Precision Switch Cam Programmer

SPECIFICATIONS

CYCLE TIMES	Choice of ON-Delay or OFF-Delay operation (not field-convertible). Choose from a variety of interchangeable motors and gears. See chart for available timing ranges.	
REPEAT ACCURACY	±0.25% of cycle time.	
SETTING ACCURACY	±0.25% of cycle time.	
FRAME SIZES	3, 6, 9 and 12 cam frame sizes are provided	
CAMS	NUMBER:	1 to 12 (or multiples up to 12, by combining timer assemblies); cams may be factory-set.
	CUT:	Standard or 50% cut, as specified (standard cams allow contact closure adjustment of 1 to 45% or 55 to 99%, 50% cut cams allow contact closure adjustment of 12 to 52% or 48 to 88%; custom cams available with 2 or 4 or cuts.
	CONSTRUCTION:	Two-inch diameter split type; made of Delrin
LIFE EXPECTANCY	MECHANICAL:	over 10,000,000 operations
	CONTACTS:	over 1,000,000 operations at less than 1 amp

LOAD SWITCHES	TYPE:	Precision switches; one for each cam
	CONTACT ACTION:	SPDT (Form C)
	CONTACT RATING:	10 A at 120 VAC (non-inductive). 1/3 HP at 125/250 VAC
	MINIMUM CONTACT ACTUATION TIME:	1% of cycle time
DRIVE MOTORS	SPEED:	choice of 12
	TYPE:	Synchronous; permanently lubricated; integral slip clutch for manual advance; anti-backup to prevent damage to switches
	VOLTAGE:	120 VAC, 50 or 60 cycles; 240 VAC, 50 or 60 cycles.
	POWER CONSUMPTION:	12 watts max
	DUAL DRIVE:	two motors may be used, special applications
	TORQUE-SPEED CAPABILITIES:	At cycle times of 30 SEC or longer, the 324 can drive and switch 12 contacts simultaneously; below 30 SEC, the motor may be limited in its ability to drive or switch a number of contacts simultaneously.
TEMPERATURE RATING	32 to 140°F (0 to 60°C)	
WEIGHT	NET: from 1-1/2 lbs. for the 3 cam unit up to 3-1/2 lbs. for the 12 cam unit	
ENCLOSURES	NEMA 12 molded case for one model 324 with maximum of 3 cams. (See Accessories) (Optional)	

MODEL NUMBER

MODEL NUMBER	324C
NUMBER OF SWITCHES	
1 Switch , 3 Cams	01
2 Switches, 3 Cams	02
3 Switches, 3 Cams	03
4 Switches, 6 Cams	04
5 Switches, 6 Cams	05
6 Switches, 6 Cams	06
7 Switches, 9 Cams	07
8 Switches, 9 Cams	08
9 Switches, 9 Cams	09
10 Switches, 12 Cams	10
11 Switches, 12 Cams	11
12 Switches, 12 Cams	12
CYCLE TIME MOTOR SPEED	
No Motor	0
5 rpm	A
150 rph	B
15 rph	E
5 rph	F
2.5 rph	G
1 rph	H
1/6 rph	L
CYCLE TIME MOTOR PINION	
No Motor	0
24 Teeth (300-495-01-00)	1
30 Teeth (300-495-02-00)	2
40 Teeth (300-495-03-00)	3
CYCLE TIME CAM SHAFT GEAR	
No Motor	0
30 Teeth (300-495-11-00)	A
36 Teeth (300-495-12-00)	B
40 Teeth (300-495-13-00)	C
45 Teeth (300-495-14-00)	D
50 Teeth (300-495-17-00)	E
55 Teeth (300-495-15-00)	F
60 Teeth (300-495-16-00)	G
OPERATION	
Repeat Cycle/Stop Cycle Dynamic Brake[1]	R
Eternal Drive by user, no motor	E
Special	K

MOTORS	
1 Motor	1
2 motors	2
No motor	3
Special	0
VOLTAGE & FREQUENCY	
120/60	A
240/60*	B
120/50	C
240/50*	D
No motor	X
OPTIONS	
None	01
1/4" dia. x 1" long shaft extension right end (Units with one or no motor)	02
1/4" dia. x 1" long shaft extension left end (Units with one or no motor)	03
1/4" dia. x 1" long shaft extension both ends (On motorless units only)	04
Special	00
FEATURES	
Standard (other than cam settings) (Blades)	X
Special	K

NOTES

CAMS

Factory setting cams to 0.25% tolerance, 50% cams allow 12 to 52% or 48 to 88% adjustment of switch actuation. 2, 3, or 4 cuts equally spaced. Have limited adjustability. (Does not include 50% cams with multiple cuts) Multiple cuts, unequally spaced. Multiple cuts over 4. Specially cut or specially molded cams.

CONTACT SWITCH

Switch with Bracket 324-260-82-00

[1]For Stop Cycle, or Brake operation, specify a 324 with one more switch than you need for your load circuits. (Do not exceed 12 switches total!) You interwire this switch to the motor according to the installation instruction for the unit.

[2] Be sure to specify shaft extension under OPTIONS

For prices and further information, consult factory.

TIME CYCLE ORDERING CODES

Select Time Cycle from table; if it is available with more than one motor and gearing combination, pick the combination which would best accommodate potential future speed changes. 3 Digit Speed Code identifies motor.

* 240 V option limited to availability

	Cam Shaft Gear	5 RPM Motor–A Time Motor Pinion 3, 40 Tooth	CODE	Time Motor Pinion 2, 30 Tooth	CODE	Time Motor Pinion 1, 24 Tooth	CODE	150 RPM Motor–B Time Motor Pinion 3, 40 Tooth	CODE	Time Motor Pinion 2, 30 Tooth	CODE	Time Motor Pinion 1, 24 Tooth	CODE	15 RPH Motor–E Time Motor Pinion 3, 40 Tooth	CODE	Time Motor Pinion 2, 30 Tooth	CODE	Time Motor Pinion 1, 24 Tooth	CODE
SECONDS resulting speed at 60 cycles	30	9	A3A	12	A2A	15	A1A	18	B3A	24	B2A	30	B1A	180	E3A	240	E2A	300	E1A
	36	10.8	A3B	14.4	A2B	18	A1B	21.6	B3B	28.8	B28	36	B1B	216	E3B	288	E2B	360	E1B
	40	12	A3C	16	A2C	20	A1C	24	B3C	32	B2C	40	B1C	240	E3C	320	E2C	400	E1C
	45	13.5	A3D	18	A2D	22.5	A1D	27	B3D	36	B2D	45	B1D	270	E3D	360	E2D	450	E1D
	50	15	A3E	20	A2E	25	A1E	30	B3E	40	B2E	50	B1E	300	E3E	400	E2E	500	E1E
	55	16.5	A3F	22	A2F	27.5	A1F	33	B3F	44	B2F	55	B1E	330	E3F	440	E2F	550	E1F
	60	18	A3G	24	A2G	30	A1G	36	B3G	48	B2G	60	B1G	360	E3G	480	E2G	600	E1G
SECONDS resulting speed at 50 cycles	30	10.8	A3A	14.4	A2A	18	A1A	21.6	B3A	28.8	B2A	36	B1A	216	E3A	288	E2A	360	E1A
	36	12.96	A3B	17.28	A2B	21.6	A1B	25.92	B3B	34.56	B2B	43.2	B1B	259.2	E3B	345.6	E2B	432	E1B
	40	14.4	A3C	19.2	A2C	24	A1C	28.8	B3C	38.4	B2C	48	B1C	288	E3C	384	E2C	480	E1C
	45	16.2	A3D	21.6	A2D	27	A1D	32.4	B3D	43.2	B2D	54	B1D	324	E3D	432	E2D	540	E1D
	50	18	A3E	24	A2E	30	A1E	36	B3E	48	B2E	60	B1E	360	E3E	480	E2E	600	E1E
	55	19.8	A3F	26.4	A2F	33	A1F	39.6	B3F	52.8	B2F	66	B1F	396	E3F	528	E2F	660	E1F
	60	21.6	A3G	28.8	A2G	36	A1G	43.2	B3G	57.6	B2G	72	B1G	432	E3G	576	E2G	720	E1G

Time Cycle (SEC) Two Motors	One Motor	MAXIMUM NUMBER OF CONTACTS SWITCHING TOGETHER Total Number of Contacts 1	2	3	4	5	6	7	8	9	10	11	12
–	5		1	–	–	–	–	–	–	–	–	–	–
3	6			1	1	1	–	–	–	–	–	–	–
3.5	7			2	2	1	1	–	–	–	–	–	–
4	8			2	2	2	1	1	–	–	–	–	–
4.5	9				3	2	2	1	1	–	–	–	–
5	10				3	3	2	2	1	1	–	–	–
7.5	15						5	4	4	3	3	3	2
10	20								7	6	6	5	5
12.5	25									8	7	7	7
15	30												10
17.5	35												
20	40												
all slower cycles													

Time Cycle SEC One Motor	THIS TABLE APPLIES TO Q MOTOR ONLY MAXIMUM NUMBER OF CONTACTS SWITCHING TOGETHER Total Number of Contacts 1	2	3	4	5	6	7	8	9	10	11	12
3.0								6	5	4	3	2
3.6									8	7	6	5
4.0										9	8	7
4.5												10
4.8												11
5.0												
all slower cycles listed for this motor												
15 RPM Motor –Q–	High torque permanent magnet. No brake diode required on stop cycle units.											

	Cam Shaft Gear	5 RPH Motor–F Time Motor Pinion 3, 40 Tooth	CODE	Time Motor Pinion 2, 30 Tooth	CODE	Time Motor Pinion 1, 24 Tooth	CODE	2.5 RPH Motor–G Time Motor Pinion 3, 40 Tooth	CODE	Time Motor Pinion 2, 30 Tooth	CODE	Time Motor Pinion 1, 24 Tooth	CODE	1 RPH Motor–H Time Motor Pinion 3, 40 Tooth	CODE	Time Motor Pinion 2, 30 Tooth	CODE	Time Motor Pinion 1, 24 Tooth	CODE
MINUTES resulting speed at 60 cycles	30	9	F3A	12	F2A	15	F1A	18	G3A	24	G2A	30	G1A	45	H3A	60	H2A	75	H1A
	36	10.8	F3B	14.4	F2B	18	F1B	21.6	G3B	28.8	G2B	36	G1B	54	H3B	72	H2B	90	H1B
	40	12	F3C	16	F2C	20	F1C	24	G3C	32	G2C	40	G1C	60	H3C	80	H2C	100	H1C
	45	13.5	F3D	18	F2D	22.5	F1D	27	G3D	36	G2D	45	G1D	67.5	H3D	90	H2D	112.5	H1D
	50	15	F3E	20	F2E	25	F1E	30	G3E	40	G2E	50	G1E	75	H3E	100	H2E	125	H1E
	55	16.5	F3F	22	F2F	27.5	F1F	33	G3F	44	G2F	55	G1F	82.5	H3F	110	H2F	137.5	H1F
	60	18	F3G	24	G2G	30	F1G	36	G3G	48	G2G	60	G1G	90	H3G	120	H2G	150	H1G
MINUTES resulting speed at 50 cycles	30	10.8	F3A	14.4	F2A	18	F1A	21.6	G3A	28.8	G2A	36	G1A	H3A	72	H2A	90	H1A	108
	36	12.96	F3B	17.28	F2B	21.6	F1B	25.92	G3B	34.56	G2B	43.2	G1B	64.8	H3B	86.4	H2B	108	H1B
	40	14.4	F3C	19.2	F2C	24	F1C	28.8	G3C	38.4	G2C	48	G1C	72	H3C	96	H2C	120	H1C
	45	16.2	F3D	21.6	F2D	27	F1D	32.4	G3D	43.2	G2D	54	G1D	81	H3D	108	H2D	135	H1D
	50	18	F3E	24	F2E	30	F1E	36	G3E	48	G2E	60	G1E	90	H3E	120	H2E	150	H1E
	55	19.8	F3F	26.4	F2F	33	F1F	39.6	G3F	52.8	G2F	66	G1F	99	H3F	132	H2F	165	HIF
	60	21.6	F3G	28.8	F2G	36	F1G	43.2	G3G	57.6	G2G	72	G1G	108	H3G	144	H2G	180	H1G

TORQUE—SPEED CAPABILITIES

The ability of the 324C to trip a number of load contacts simultaneously is determined in the chart below. Pick the vertical column that corresponds to the total number of contacts you need and proceed down the column that corresponds to the fastest time cycle you intend to use. If the intersection of the two columns is in the gray, there is no limit ation to the 324's ability to trip contacts simultaneously; if not, the limit is noted in the intersected square.

	Cam Shaft Gear	1/6 RPH Motor–L Time Motor Pinion 3, 40 Tooth	CODE	Time Motor Pinion 2, 30 Tooth	CODE	Time Motor Pinion 1, 24 Tooth	CODE
HOURS resulting speed at 60 cycles	30	4.5	L3A	6	L2A	7.5	L1A
	36	5.4	L3B	7.2	L2B	9	L1B
	40	6	L3C	8	L2C	10	L1C
	45	6.75	L3D	9	L2D	11.25	L1D
	50	7.5	L3E	10	L2E	12.5	L1E
	55	8.25	L3F	11	L2F	13.75	L1F
	60	9	L3G	12	L2G	15	L1G
HOURS resulting speed at 50 cycles	30	5.4	L3A	7.2	L2A	9	L1A
	36	6.48	L3B	8.64	L2B	10.8	L1B
	40	7.2	L3C	9.6	L2C	12	L1C
	45	8.1	L3D	10.8	L2D	13.5	L1D
	50	9	L3E	12	L2E	15	L1E
	55	9.9	L3F	13.2	L2F	16.5	L1F
	60	10.8	L3G	14.4	L2G	18	L1G

E339488

1/16 DIN ON Delay/Interval Timer

- ON Delay / Interval Mode of Operation
- 12 Timing Ranges
- Universal Supply Voltage
- LED Status Indicator Power ON, Relay ON
- Compact Size
- Face Plate IP40

ON DELAY / TIMING MODES:
The 405AR has a selectable ON-Delay or Interval Mode of operation. The unit has a DPDT 10A contact output. When in the On-Delay mode, the contacts transfer at time out. When in the Interval mode, the contacts transfer when power is applied and released at time out.

1/16 DIN HOUSING:
The 48mm² housing is compact and IP40 rated front cover. The 405AR100S2X is mounted in an 8-pin round socket (PF083A or OT-08). The 405AR100S5TX is a terminal unit (no socket required). The 405AR can also be panel mounted.

The MODE/Range select dip switches are located on the front under a clear cover.

UNIVERSAL POWER:
The 405AR is universal powered and can be powered by 20 to 240 VAC or 12 to 240 VDC, greatly reducing inventory management of replacement units.

SPECIFICATIONS

OUTPUT CONTACT	DPDT
DELAY MODES	ON Delay / Interval
TIME RANGES	1 / 3 / 10 / 30 SEC / MIN / HR
RELAY RATING	
Model S2X	10A @ 230 VAC/24 VDC, resistive
Model S5TX	5A @ 230 VAC/24 VDC, resistive
ACCURACY	Setting: ± 5% of full scale.
	Repeat: ±0.5% or 50 msec (whichever is greater).
RESET	On interruption of power.
OPERATING TEMPERATURE	32° to 122°F (0° to 50°C)
STORAGE TEMPERATURE	-4° to 167°F (-20° to 75°C)
000-825-90-00	Back Connections Socket

LOAD CONNECTIONS

8-PIN PLUG-IN TYPE

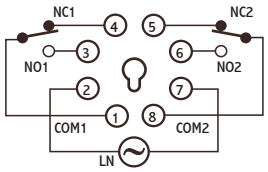

TERMINAL TYPE

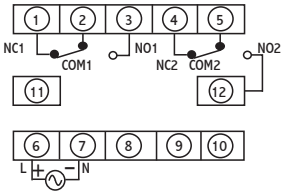

DIMENSIONS (MILLIMETERS)

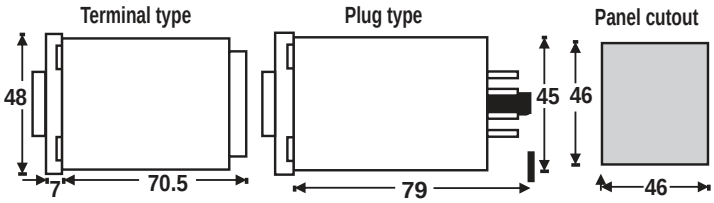

OPERATING MODE

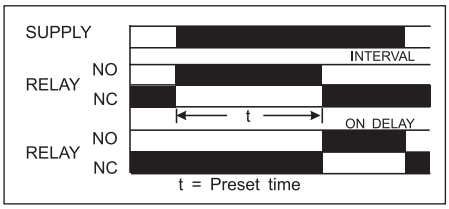

MODE AND RANGE SELECTION

Dip switch settings for time range selection

RANGE	SW 1	SW 2	SW 3	SW 4
1 SEC	OFF	OFF	OFF	OFF
3 SEC	OFF	ON	OFF	OFF
10 SEC	ON	OFF	OFF	OFF
30 SEC	ON	ON	OFF	OFF
1 MIN	OFF	OFF	OFF	ON
3 MIN	OFF	ON	OFF	ON
10 MIN	ON	OFF	OFF	ON
30 MIN	ON	ON	OFF	ON
1 HR	OFF	OFF	ON	OFF/ON
3 HR	OFF	ON	ON	OFF/ON
10 HR	ON	OFF	ON	OFF/ON
30 HR	ON	ON	ON	OFF/ON

Dip switch settings for mode selection

MODE	SW 5
ON DELAY	OFF
INTERVAL	ON

Switch setting example:

Range: 30sec
Mode :On delay

ORDERING CODE

MODEL NUMBER	DESCRIPTION
405AR100S2X	8-PIN socket with 10 amp relay
405AR100S5TX	Terminal with 5 amp relay

INSTANTANEOUS & DELAYED: A version of the 405 is available with one set of SPDT instantaneous contacts and one set of SPDT delayed contacts. The instantaneous contacts transfer as soon as the timer is powered. The delayed contacts transfer at time out. This contact arrangement can be used to replace many conventional timers.

ON DELAY/INTERVAL TIMING MODE VERSION: A version of the 405 is available with selectable ON-delay or Interval timing modes. This version has a set of DPDT output contacts. When in the ON-delay mode, the contacts transfer at time out. When in the Interval mode, the contacts transfer when power is applied and release at time out.

UNIVERSAL POWER: All 405 timers can be powered using 24-240 VAC or 24 VDC power, greatly simplifying ordering and inventory management of replacement units.

1/16 DIN HOUSING: The 48mm^2 (1/16 DIN) housing is compact design. The 405 is mounted in an 8-pin round (octal) socket. With an optional mounting clip, the 405 can be panel mounted.

The Dial on the 405 is extra large and is easy to read. When fractional ranges are selected, decimal points are clearly indicated.

The Mode select and Range select switches are located on the side of the unit, so that when panel mounted, these switches are not accessible to the operator. This tamper proof feature prevents unauthorized or hazardous changes to the timing mode and range from being made.

CYCLE PROGRESS INDICATION: The 405 LED indicator provides a unique and effective method of cycle progress indication. Off before timing, the LED blinks at an ever increasing rate as the cycle progresses: once every 3-1/2 seconds during the first 10% of the cycle, twice during the second 10%, and so on. At time out, the LED pulses at a high rate. (In the 1, 5, 10 and 50 second ranges, the LED is OFF before timing, steady ON during timing, and pulsing ON after time-out).

Timing begins when the start switch is closed. This starts an oscillator which runs at a frequency determined by the time setting. A fixed number of counts from the oscillator determines the end of the timing cycle. The time required to accomplish this depends upon the oscillator frequency. During timing, an LED located on the dial face blinks. For the first 10% of the cycle, LED repeatedly blinks once followed by a pause. For the second 10%, it blinks twice and so on indicating the cycle progress. The LED flashes rapidly and continuously after time out.

OPERATIONS

MODEL...F1X

The instantaneous contacts (3-1-4) transfer immediately after the start switch is closed. The delayed contacts (6-8-5) transfer after the timing cycle indicated on the front dial setting. Both contacts remain transferred until the unit is reset.

MODEL...F2X

ON DELAY MODE: At time out, the DPDT relay transfers its contacts. These contacts remain transferred until the start switch is opened or power is removed by some other means. The 405 then resets and is ready for another cycle.

INTERVAL MODE: When the start switch is closed, the DPDT relay transfers its contacts. The contacts remain transferred until time out. The timer will not start again until the start switch is opened or power is removed by some other means. The 405 then resets and is ready for another cycle.

E48329

Timer with Instantaneous Relay

- On-Delay version with instantaneous relay
- Selectable On-Delay/Interval Timing Mode version
- Output Contacts rated 10A 120/240 VAC and 30 VDC
- Six Timing Ranges in a single unit
- Timing Ranges:
  1 and 10 SEC, MIN, and HRS
  5 and 50 SEC, MIN, and HRS
- Universal Power Supply: 24-240 VAC and 24 VDC
- 48mm^2 DIN Standard housing
- Large and easy to read dial shows decimal points
- Round (octal) socket mount or mount in panel cutout
- Range and Mode select are tamper proof when panel mounted
- Unique flashing cycle progress indication

WIRING

WIRING

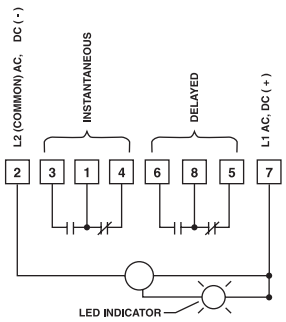

MODEL 405C...F1X

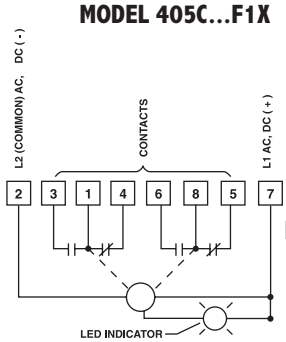

MODEL 405C...F2X

TERMINAL WIRING

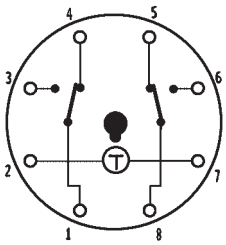

MODEL NUMBER

MODEL NUMBER	405C			
RANGE				
Six dial-selected ranges (1 or 10 SEC/MIN/HRS)	100			
Six dial-selected ranges (5 or 50 SEC/MIN/HRS)	500			
VOLTAGE & FREQUENCY				
12 VDC		E		
24 to 240 VAC (50/60 Hz) and 24 VDC		F		
24 VDC (low inrush current for short-circuit protected sensors)		N		
ARRANGEMENT				
8-Pin ON-Delay (with instantaneous contacts) Timing Mode			1	
8-pin ON-Delay, Interval Timing Modes			2	
FEATURES				
Standard				X
Special				K

ACCESSORIES

8-Pin surface/DIN rail socket	000-825-85-00
Hold down for above socket (Requires 2 per unit)	407-025-13-00
Panel mounting bracket	405-320-02-00
Plug-in socket kit (8-pin)	319-261-45-00
8-Pin panel socket w/rear facing terminals	000-825-90-00

SPECIFICATIONS

MODELS

405C100F1X	ON-Delay w/instantaneous & delayed relays (1 or 10 SEC/MIN/HRS)
405C500F1X	ON-Delay w/instantaneous & delayed relays (5 or 50 SEC/MIN/HRS)
405C100F2X	ON-Delay/Interval with (1) DPDT relay (1 or 10 SEC/MIN/HRS)
405C500F2X	ON-Delay/Interval with (1) DPDT relay (5 or 50 SEC/MIN/HRS)

Both models available in 6 ranges from 1 SEC to 10 HRS or 5 SEC to 50 HRS

CONTACT RATING

Rated 10 AMPS resistive at 30 VDC or 250 VAC (or less)
1/8 HP @120 VAC
1/4 HP @ 240 VAC
240 VA @ 240 VAC
LIFE: 10 million operation with no load 100,000 operations with: 10 AMPS at 30 VDC (or less) or 10 AMPS at 250 VAC (or less)

CONTACT MATERIAL

Silver Nickel

TEMPERATURE RATING

0 to 122°F (-18 C to 50 C)

MOUNTING

Plug-in octal base; mounts in any position w/ retaining clip

Options:
- Surface mounting socket
- DIN rail mounting socket
- Panel-mounting adapter kit
- Plug-on socket kit

POWER REQUIREMENTS

Universal power supply - reverse polarity protected
Unit will accept power from 24 to 240 VAC, 50 or 60 Hz, (+10%, - 20%)

AC
- Inrush - 1.5 Amps
- Power required - 1.2 watts

DC
- Maximum ripple @100 Hz - 5%
- Current required - 50mA
- Power required - 1.2 watts
- F option Peak inrush current = 2 AMPS @ 24 VDC
- N option Peak inrush current = 150 mA @ 24 VDC

REPEAT ACCURACY

Varies as a function of temperature.
Any voltage (constant temperature): ±0.5%*
Any voltage (0°F to 140°F): ±2.0%*
*Variation from average actual time.

MINIMUM SETTING

2% of range, with the exception of 50 mSEC on the 1 second range

SETTING ACCURACY

± 5% of range

RESET

a 0 to 20 mSEC power interruption: guaranteed no reset.
b 20 to 65 mSEC; it may reset (40 mSEC typical reset).
c Over 65 mSEC guaranteed to reset.

The TDR will reset properly and not start timing when subjected to an open start switch leakage of 1.5 mA or less. (Prox switch and Triac drive applications)

WEIGHT

5 oz. (140 g)

DIMENSIONS (INCHES/MILLIMETERS)

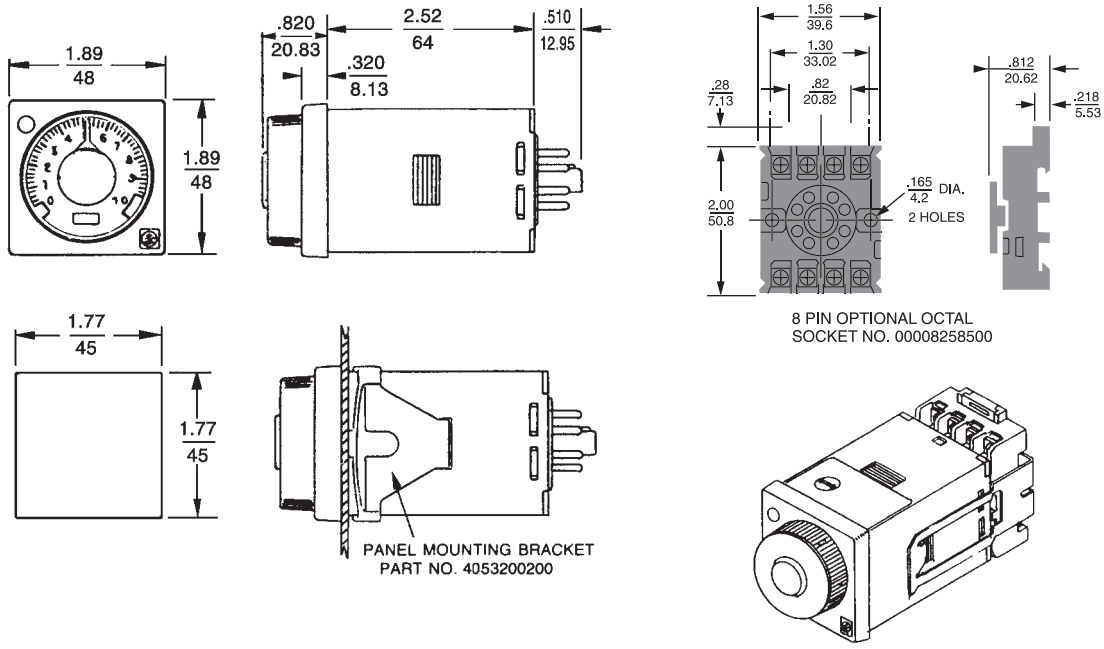

TYPICAL CIRCUITS

405C... F1X

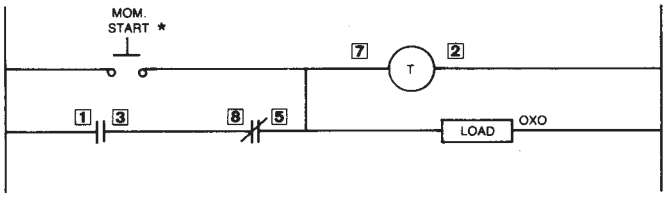

*Minimum Momentary Switch Closure Time - 50 mSEC

405C... F2X

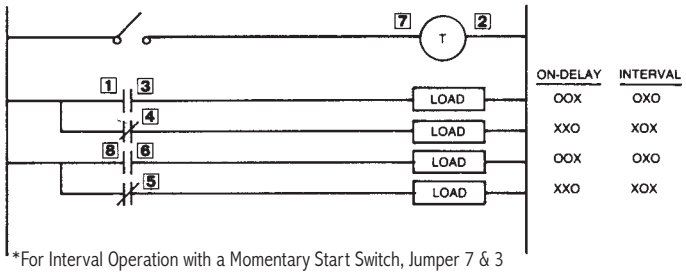

*For Interval Operation with a Momentary Start Switch, Jumper 7 & 3

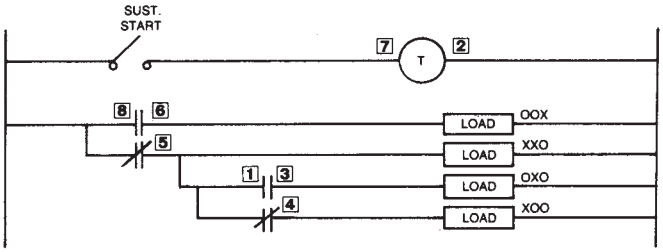

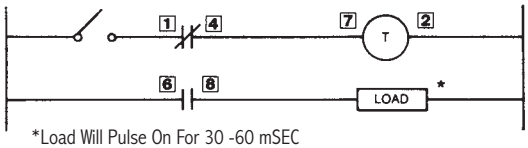

*Load Will Pulse On For 30 -60 mSEC

*in off-delay mode, start switch must be isolated.
Do NOT connect any load in parallel

BEFORE START
TIMING
TIMED OUT

0 0 X

0 = LOAD OFF
X = LOAD ON

*in off-delay mode, start switch must be isolated.
Do NOT connect any load in parallel

BEFORE START
TIMING
TIMED OUT

0 0 X

0 = LOAD OFF
X = LOAD ON

E48329

1/16 DIN Multi-Mode Timer

- Selectable ON-Delay/OFF-Delay/Interval Timing Modes
- Separate Start Input
- Output Contacts rated 10A at 120/240 VAC and 30 VDC
- Six Timing Ranges in a single unit
- 1 and 10 SEC, MIN, and HRS
  5 and 50 SEC, MIN, and HRS
- Universal Power Supply; 24-240 VAC and 24 VDC
- 48mm^2 DIN Standard housing
- Large and easy to read dial shows decimal points
- Round (octal) socket mount or mount in panel cutout
- Range and Mode select are tamper proof when panel mounted
- Unique flashing cycle progress indication

The 407C Directly Replaces 407B and 407A

Special note for Off-Delay operation: When operated from AC, the start switch must be of a dry contact type such as a relay contact or mechanical switch. When operated from DC, the start switch can be a dry contact type such as a relay contact or mechanical switch. In addition, a solid-state device may be used as long as its saturation voltage drop is less than 1.5 VDC at 50mA.

MULTIPLE TIMING MODES: The 407 is available with selectable On-Delay, Off-Delay or Interval timing modes. These timing modes energize a set of DPDT output contacts. When in the On-Delay mode, the 407 begins timing when the timer is energized. In On-Delay mode, the contacts transfer at time out. When in the Off-Delay mode, the 407 begins timing when the Start input is de-energized. In Off-Delay mode, the contacts transfer at time out. When in the Interval mode, the contacts transfer when the timer is energized. In Interval mode, the contacts release at time out.

UNIVERSAL POWER SUPPLY: All 407 timers can be powered using 24-240 VAC or 24 VDC power, greatly simplifying ordering and inventory management of replacement units.

HIGH ACCURACY: The 407's timing circuit is not a simple RC circuit. It utilizes the sophIstication of a proprietary integrated circuit that includes counting technology along with a stable oscillator to provide repeatable time delays.

1/16 DIN HOUSING: The 48mm^2 (1/16 DIN) housing is compact. The 407 is mounted in an 11-pin round socket. With an optional mounting clip, the 407 can be panel mounted.

The Dial on the 407 is extra large and is easy to read. When fractional ranges are selected, decimal points are clearly indicated.

The Mode **SELECT AND RANGE** select switches are located on the side of the unit, so that when panel mounted, these switches are not accessible to the operator. This tamper proof feature prevents unauthorized or hazardous changes to the timing mode and range from being made.

CYCLE PROGRESS INDICATION: The 407 LED indicator provides a unique and effective method of cycle progress indication. Off before timing, the LED blinks at an ever increasing rate as the cycle progresses; once every 3-1/2 seconds during the first 10% of the cycle, twice during the second 10%, and so on. At time out, the LED pulses at a high rate. (In the 1, 5, 10 and 50 second ranges, the LED is Off before timing, steady On during timing, and pulsing On after time-out).

OPERATIONS

Timing begins when the start switch is closed (ON-delay and INT modes) or opened (OFF-delay mode). This starts an oscillator which runs at a frequency determined by the time setting. A fixed number of counts from the oscillator determines the end of the timing cycle. The time required to accomplish this depends upon the oscillator frequency. During timing, An LED located on the dial face blinks. For the first 10% of the cycle, the LED repeatedly blinks once followed by a pause. For the second 10%, it blinks twice and so on indicating he cycle progress. The LED flashes rapidly and continuously after time out.

ON-DELAY MODE: At time out, the DPDT relay transfers its contacts. These contacts remain transferred until the start switch is opened or power is removed by some other means.

INTERVAL MODE: When the start switch is closed, the DPDT relay transfers its contacts. The contacts remain transferred until time out. The timer will not start again until the start switch is opened or power is removed by some other means. The 407B then resets and is ready for another cycle.

OFF-DELAY MODE: Power must be applied to the timer before and during timing (terminals #10 & 2). Upon closure of the start switch, the DPDT relay transfers its contacts. The timing begins when the start switch is opened. The relay remains energized during timing. At time out, the relay de-energizes.

SPECIFICATIONS

MODELS	407C100F3X	ON-Delay, OFF-Delay, Interval Timing with (1) DPDT relay (1 or 10 SEC/MIN/HRS)
	407C500F3X	ON-Delay, OFF-Delay, Interval Timing with (1) DPDT relay (5 or 50 SEC/MIN/HRS)
	Both models available in 6 ranges from 1 SEC to 10 HRS or 5 SEC to 50 HRS	
CONTACT RATING	Rated 10 AMPS resistive at 30 VDC or 250 VAC (or less) 1/8 HP @120 VAC 1/4 HP @ 240 VAC, 240 VA @ 240 VAC LIFE: 10 million operation with no load 100,000 operations with: 10 AMPS at 30 VDC (or less) or 10 AMPS at 250 VAC (or less)	
CONTACT MATERIAL	Silver Nickel	
TEMPERATURE RATING	0° to 122°F (-18°C to 50°C)	
MOUNTING	Plug-in 11-Pin round base	
	Options:	Surface mounting socket DIN rail mounting socket Panel-mounting adapter kit Plug-on socket kit
POWER REQUIREMENTS	Universal power supply - reverse polarity protected Unit will accept power from 24 to 240 VAC, 50 or 60 Hz, (+10%, -20%) 24 VDC (+20%, -20%)	
	AC	Inrush - 1.5 Amps Power required - 1.2 watts
	DC	Maximum ripple @ 100 Hz - 5% Current required - 50mA Power required - 1.2 watts F option - Peak inrush current = 2 AMPS @ 24 VDC N option - Peak inrush current = 150 mA @ 24 VDC
REPEAT ACCURACY	Varies as a function of temperature. Any voltage (constant temperature): –0.5%* Any voltage (0 F to 140 F): –2.0%* *Variation from average actual time.	

SPECIFICATIONS (CONTINUED)

MINIMUM SETTING	2% of range, with the exception of 50 mSEC on the 1 second range	
SETTING ACCURACY	±5% of range	
RESET	a	0 to 20 mSEC power interruption: guaranteed no reset.
	b	20 to 65 mSEC; it may reset (40 mSEC typical reset).
	c	Over 65 mSEC guaranteed to reset.
	The TDR will reset properly and not start timing when subjected to an open start switch leakage of 1.5 mA or less. (Prox switch & Triac drive applications)	
TERMINAL #6 (START SWITCH REQUIREMENTS OFF-DELAY)	DC	Minimum Current Rating - 50mA Maximum saturated voltage drop - 1.5 VDC
	AC	Minimum Current Rating - 1.5 A
WEIGHT	5 oz. (140 g)	

MODEL NUMBER

MODEL NUMBER	407C			3	
RANGE					
Six dial-selected ranges (1 or 10 SEC/MIN/HRS)		100			
Six dial-selected ranges (5 or 50 SEC/MIN/HRS)		500			
VOLTAGE & FREQUENCY					
12 VDC			E		
24 to 240 VAC (50/60 Hz) and 24 VDC			F		
24 VDC (low inrush current for short-circuit protected sensors)			N		
ARRANGEMENT					
11-pin ON -Delay, OFF-Delay, Interval Timing Modes				3	
FEATURES					
Standard					X
Special					K

ACCESSORIES

11-Pin surface/DIN rail socket	000-825-86-00
Hold down for above socket (Requires 2 per unit)	405-025-07-00
Panel mounting bracket	405-320-02-00
Plug-in socket kit (11-pin)	314-260-07-00

WIRING

MODEL 407C...F3X

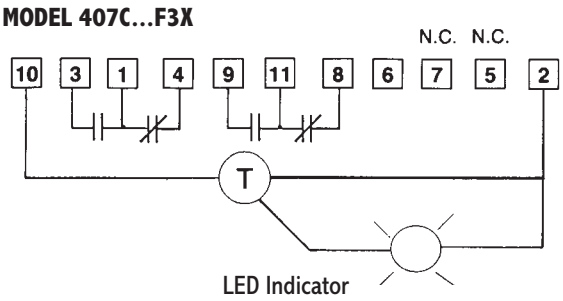

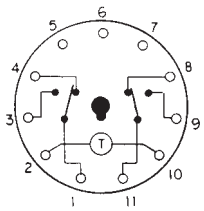

TERMINAL WIRING
CAUTION: Do NOT connect terminal 6 to L1 (AC Hot or DC+). Damage to unit will result.
Terminal 6 is a dry contact only!

DIMENSIONS (INCHES/MILLIMETERS)

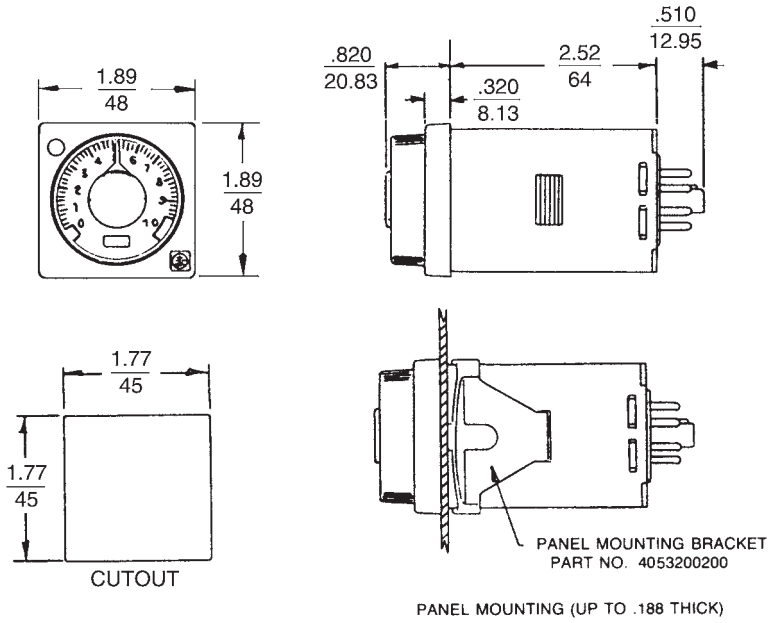

Optional 11-pin Socket
Part Number 000-825-96-00

TYPICAL CIRCUITS

ON-DELAY (MODE SWITCH IN ON-DELAY POSITION)

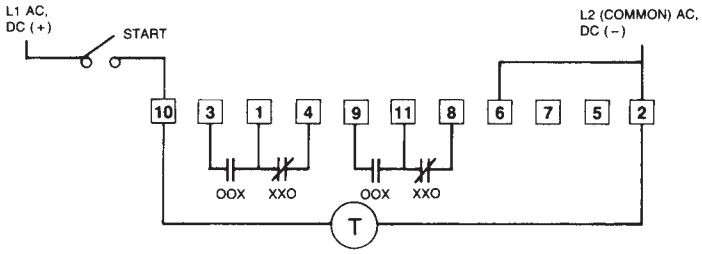

OFF-DELAY (MODE SWITCH IN OFF-DELAY POSITION)

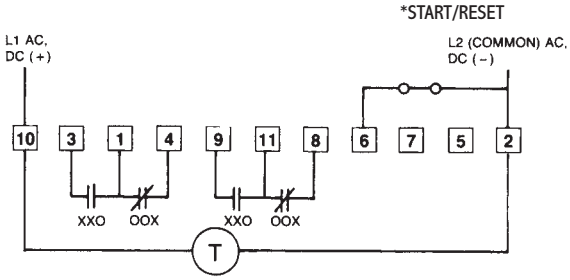

INTERVAL (MODE SWITCH IN INTERVAL POSITION)

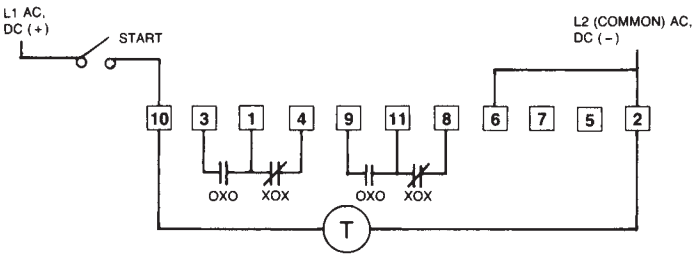

*in off-delay mode, start switch must be isolated.
Do NOT connect any load in parallel

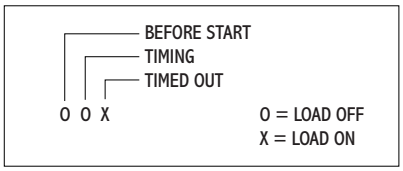

PUSH BUTTON START/INTERNAL: The 409 has a Push Button built into its front dial. When pressed, the timer starts and provides an interval time delay. The 409 has a set of DPDT output contacts. When the Push Button is pressed with power applied, the contacts immediately transfer. After the timer has timed out, the contacts release. Unit timing will reset with power loss.

UNIVERSAL POWER SUPPLY: All 409 timers can be powered using 24-240 VAC or 24 VDC power, greatly simplifying ordering and inventory management of replacement units.

HIGH ACCURACY: The 409's timing circuit is not a simple RC circuit. It utilizes the sophistication of a proprietary integrated circuit that includes counting technology along with a stable oscillator to provide repeatable time delays.

1/16 DIN HOUSING: The 48mm^2 (1/16 DIN) housing is compact. The 409 is mounted in an 8-pin round (octal) socket. With an optional mounting clip, the 409 can be panel mounted.

The dial on the 409 is extra large and is easy to read. When fractional ranges are selected, decimal points are clearly indicated.

The Range Select Switch is located on the side of the unit, so that when panel mounted, this switch is not accessible to the operator. This tamper proof feature prevents unauthorized or hazardous changes to the timing range from being made.

OPERATIONS

Timing begins when the front green push button is pressed. This energizes the DPDT relay and starts an oscillator which runs at a frequency determined by the time setting. A fixed number of counts from the oscillator determines the end of the timing cycle.

The LED indicates the status of the relay output. It comes on when the green push button is pressed and remains on steady during the cycle. The LED turns off after the cycle is completed and the contacts released.

MODEL NUMBER

MODEL NUMBER	409B			2	
RANGE					
Six dial-selected ranges (1 or 10 SEC/MIN/HRS)		100			
Six dial-selected ranges (5 or 50 SEC/MIN/HRS)		500			
VOLTAGE & FREQUENCY					
12 VDC			E		
24 to 240 VAC (50/60 Hz) and 24 VDC			F		
ARRANGEMENT					
8-Pin, Push Button Start, Interval Operation				2	
FEATURES					
Standard					X
Special					K

ACCESSORIES

8-Pin surface/DIN rail socket	000-825-85-00
Hold down for above socket (Requires two per unit)	407-025-13-00
Panel mounting bracket	405-320-02-00
Plug-in socket kit (8-pin)	319-261-45-00
8-Pin panel socket with rear facing terminals	000-825-90-00

E48329

1/16 DIN Push-Button Timer

- Push Button Start, Interval Timing Mode
- Push Button Integral to front dial
- Output Contacts rated 10A at 120/240 VAC and 30 VDC
- Six Timing Ranges in a single unit:
  1 and 10 SEC, MIN, and HRS
  5 and 50 SEC, MIN, and HRS
- Universal Power Supply: 24-240 VAC and 24 VDC
- 48mm^2 DIN Standard housing
- Large and easy to read dial shows decimal points
- Round (octal) socket mount or mount in panel cutout
- Range and Mode select are tamper proof when panel-mounted

DIMENSIONS (INCHES/MILLIMETERS)

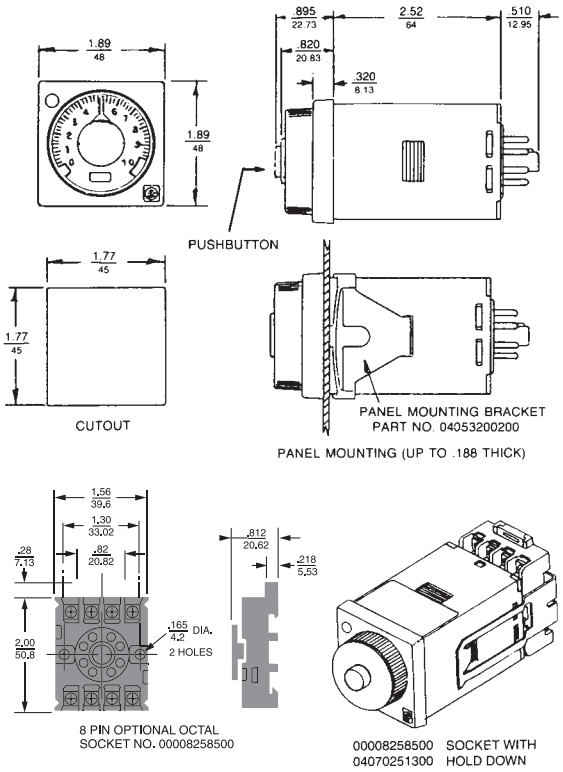

WIRING

MODEL 409B...F2X

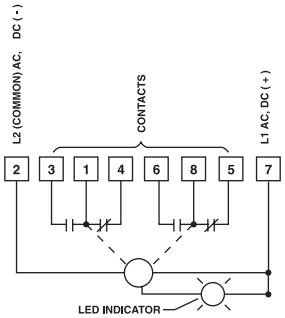

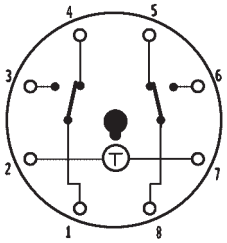

TERMINAL WIRING

TYPICAL CIRCUITS

409B...F2X

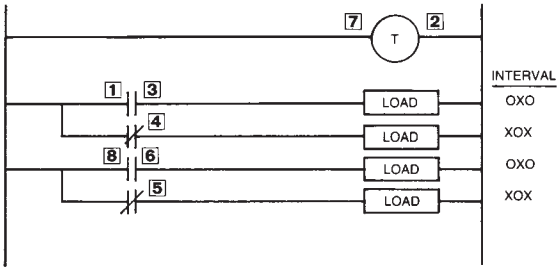

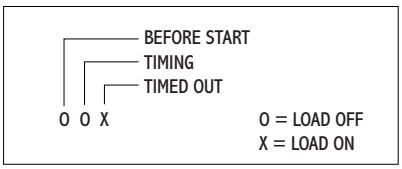

SPECIFICATIONS

MODELS	409B100F2X	Push Button Start, Interval Timing with (1) DPDT relay (1 or 10 SEC/MIN/HRS)
	409B500F2X	Push Button Start, Interval Timing with (1) DPDT relay (5 or 50 SEC/MIN/HRS)
	Both models available in 6 ranges from 1 SEC to 10 HRS or 5 SEC to 50 HRS	
CONTACT RATING	Rated 10 AMPS resistive at 30 VDC or 250 VAC (or less) 1/8 HP @ 120 VAC 1/4 HP @ 240 VAC 240 VA @ 240 VAC	
	LIFE:	10 million operation with no load 100,000 operations with: 10 AMPS at 30 VDC (or less) or 10 AMPS at 250 VAC (or less)
CONTACT MATERIAL	Silver Nickel	
TEMPERATURE RATING	0° to 122°F (-18° to 50°C)	
MOUNTING	Plug-in octal base; mounts in any position with retaining clips.	
	Options:	Surface mounting socket DIN rail mounting socket Panel-mounting adapter kit Plug-on socket kit
POWER REQUIREMENTS	Universal power supply - reverse polarity protected Unit will accept power from 24 to 240 VAC, 50 or 60 Hz, (+10%, -20%) 24 VDC (+20%, -20%)	
	AC	Inrush - 1.5 Amps Power required - 1.2 watts
	DC	Maximum ripple @ 100 Hz - 5% Current required - 50mA Power required - 1.2 watts
REPEAT ACCURACY	Varies as a function of temperature. Any voltage (constant temperature): ±0.5%*	
	Any voltage (0 F to 140 F): ±2.0%*	
	*Variation from average actual time.	
MINIMUM SETTING	2% of range, with the exception of 50 mSEC on the 1 second range	
SETTING ACCURACY	±5% of range	
RESET	a	0 to 20 mSEC power interruption: guaranteed no reset
	b	20 to 65 mSEC; it may reset (40 mSEC typical reset)
	c	Over 65 mSEC guaranteed to reset
WEIGHT	5 oz. (140 g)	

The 417 True Off-Delay Timer is designed for the most rugged industrial environments. It offers exceptional electrical noise immunity, with excellent setting and repeat accuracy.

Each 417 can be powered from 24 VAC to 240 VAC and 24 VDC, greatly simplifying ordering and inventory management.

The 48mm² (1/16 DIN) housing is compact. The 417 is mounted in an 8-pin octal or 11-pin round socket. The 417 can be panel-mounted with an optional mounting clip.

A large time-setting knob is provided for easy adjustment by operator.

The range select switch is located on the side of the unit; therefore, once panel-mounted, the switch is not accessible to the operator. This tamper-proof feature prevents unauthorized or hazardous changes to the timing range.

The 417's high intensity LED turns on when power is applied to the timer and turns off during timing.

c UL us
E48329

True OFF-Delay Timer

- True Off-Delay mode of operation
- Output contacts rated 10A at 120/240 VAC
- Three timing ranges in a single unit:
  10 SEC, 1 MIN, 10 MIN
  5 SEC, 0.5 MIN, 5 MIN
- Universal power operation:
  24 VAC to 240 VAC & 24 VDC
- 8-Pin or 11-Pin mounting.
- Remote reset models.
- 48mm² DIN standard housing
- Range selection is tamper-proof when panel-mounted.

SPECIFICATIONS

MODELS	Choice of eight multi-range units. Each model has three timing ranges.	
RANGE	Model 417B100 (10 SEC, 1 MIN, 10 MIN) Model 417B500 (5 SEC, 0.5 MIN, 5 MIN)	
CONTACT RATING	10 AMPS (Resistive @ 250 VAC)	1/6 HP @ 120 VAC 1/3 HP @ 240 VAC
TEMPERATURE RATING	0° to 104°F (-18° to 40°C)	
NOISE IMMUNITY	Showering Arc per NEMA 2-230, the 417 will withstand a voltage surge of 4500 volts for 50 µsec without damage.	
MOUNTING	Plug in base available in 8-Pin Octal or 11-Pin Round Base.	
	Options:	Surface mounting socket DIN rail mounting socket Panel mounting adapter kit Plug-in socket kit
POWER REQUIREMENTS	24 to 240 VAC & 24 VDC, 50 or 60 Hz, (+10%, -20%) 24 to 240 VAC. (+20%, -20%) 24 VDC DC MAXIMUM RIPPLE AT 60 Hz -5%	
LOAD RELAY	TYPE	DPDT, Standard Models SPDT, Remote Reset Models
	LIFE	10,000,000 operations (no load 100,000 operations with 5 AMPS at 30 VDC (or less) or 5 AMPS at 250 VAC (or less)
REPEAT ACCURACY	± 5%* *Variation from average actual time.	
MINIMUM SETTING	2% of range	
SETTING ACCURACY	± 10%	
REMOTE RESET	50 mSEC minimum (remote reset models)	
POWER ON TIME	1.0 SEC minimum	
INDICATOR	Power on LED	
HOUSING	48mm² (1/16 DIN)	
WEIGHT	5 oz. (140 g)	

TYPICAL APPLICATIONS

Whenever main power is interrupted, the 417 (adjustable from 0.1 SEC to 10 MIN), enables an emergency backup power source.

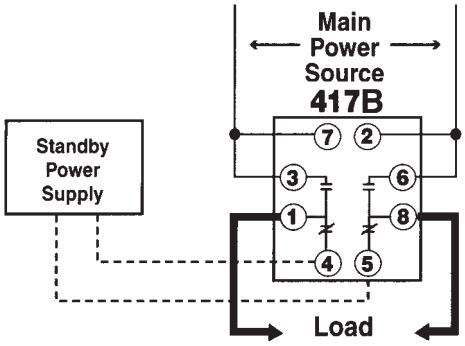

Controlled by a PLC, the 417 timing cycle can be aborted by using the remote reset terminal.

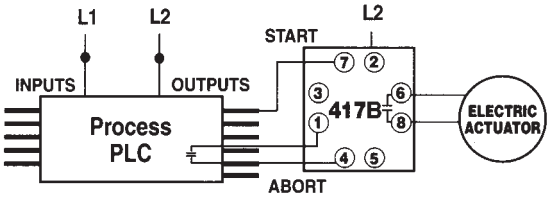

The 417B Directly Replaces 417A

DIMENSIONS (INCHES/MILLIMETERS)

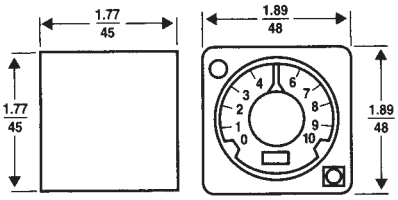

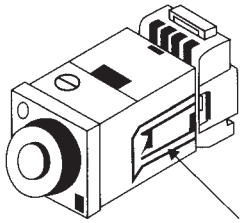

HOLD DOWN CLIP
ATC P/N 407-026-13-00

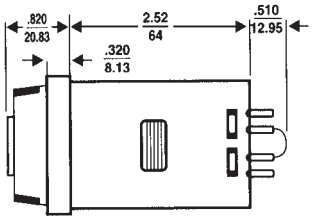

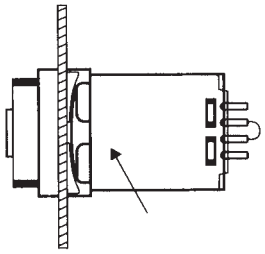

PANEL MOUNTING BRACKET
ATC P/N 406-320-02-00

PANEL MOUNTING
(UP TO 0188 THICK)

OPERATIONS

When power is applied to the timer, the relay energizes and the indicating LED turns on. Timing starts when power is removed, and the LED turns off. The output relay remains energized until the end of the cycle, or by connecting terminals 1 to 4 when using the Remote Reset Model. During time delay, power on will RESET Delay Time.

MODEL 417...F.X

Standard unit with DPDT relay contacts

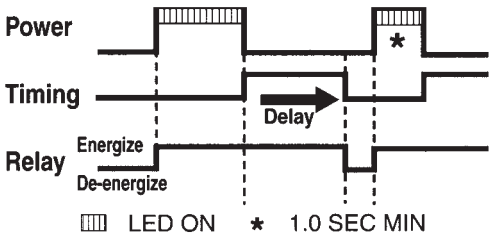

MODEL 417...F.R

Same as standard unit except with SPDT relay contacts and ability to reset from an externally located remote reset switch

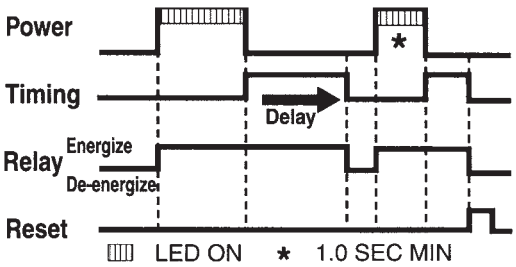

SETTING THE RANGE

Refer to the drawing. Using a small screwdriver inserted into the adjusting slot as shown (fig. 1), rotate the range switch. The selected range will appear through the window of the dial face.

MODEL NUMBER

MODEL NUMBER	417B		F		
RANGE					
10 SEC, 1 MIN, 10 MIN		100			
5 SEC, 0.5 MIN, 5 MIN		500			
VOLTAGE & FREQUENCY					
24 to 240 VAC & 24 VDC			F		
ARRANGEMENT					
8-Pin Base				2	
11-Pin Base				4	
FEATURES					
Standard					X
Remote					R
Special					K

ACCESSORIES 8-PIN	
8-Pin surface/DIN rail socket	000-825-85-00
Hold down for above socket (Requires two per unit)	407-025-13-00
Panel mounting bracket	405-320-02-00
Plug-in socket kit (8-pin)	319-261-45-00
8-Pin panel socket w/rear facing terminals	000-825-90-00
ACCESSORIES 11-PIN	
11-Pin surface/DIN rail socket	000-825-86-00
Hold down for above socket (Requires two per unit)	407-025-13-00
Panel mounting bracket	405-320-02-00
Plug-in socket kit (11-pin)	319-260-07-00

WIRING

TERMINAL WIRING

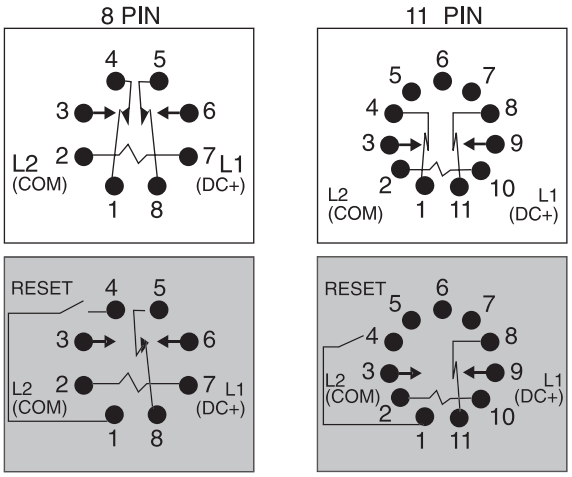

The 422AR Flip-Flop timer is available with Repeat Cycle operations. During Repeat Cycle operation the 422AR cycle ON and OFF repeatedly, allowing periodic cycling of a load. Two knobs are available to individually adjust the ON-time and the OFF-time. The 422AR can be configured with either the relay being energized during the first timing period or de-energized during the first timing period.

The 422AR have 6 selectable timing ranges available for both ON-time and OFF-time periods. The ranges are 1 and 10 SEC/MIN/HRS dip switch selectable. Having this flexibility allows for a load to be energized for a brief time over a cycle that lasts up to 10 hours. This is ideal for lubrication or other maintenance functions that must occur each shift or day during a plant operation.

The 422AR 1/16 DIN housing is compact, and designed for panel mounting. The timer is mounted in an 8-pin round socket. The front of the 422AR features 2 knobs. One knob is used to set the ON-time and the other knob is used to set the OFF-time for the timer's cycle.

The 422AR is universal powered by 20 to 240 VAC or 12 to 240 VDC operation voltage.

The output of the 422AR has a DPDT mechanical relay which is rated for 10 amps @ 250 VAC resistive. The 422AR can be ordered in a terminal option which is available with 5 amp Relay output.

The 422's have individual LED indicators for ON time and OFF time. These LED's provide a unique and effective method of cycle progress indication.

SPECIFICATIONS

SUPPLY VOLTAGE	20 to 240 VAC,12 to 240 VDC. (AC: 50/60 Hz)
OUTPUT CONTACT	DPDT
DELAY MODES	Cyclic ON first or OFF first (selectable by DIP switches)
TIME RANGES	1 / 10 SEC/ MIN / HR for both On & Off time (selectable by DIP switches)
RELAY RATING	
Model S0X	10A @ 230 VAC, resistive
Model S5TX	5A @ 230 VAC/24 VDC, resistive
POWER CONSUMPTION	2 VA max.
ACCURACY	Setting: ± 5% of full scale.
	Repeat: ±0.5% or 50 msec (whichever is greater).
LED INDICATION	Power ON, Relay ON
RESET	On interruption of power
RESET TIME	Less than 100 mSEC.
HOUSING	Flame retardant plastic.
HUMIDITY	Up to 95% RH.
OPERATING TEMPERATURE	32° to 122°F (0° to 50°C)
STORAGE TEMPERATURE	-4° to 167°F (-20° to 75°C)
MOUNTING	Panel mounting
WEIGHT	115 gms

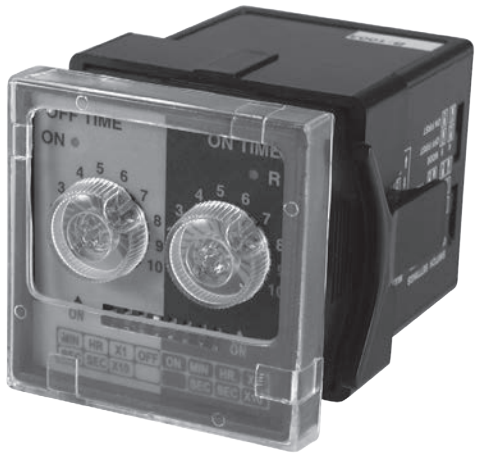

E339488

1/16 DIN Flip-Flop Timer

- Six Selectable Ranges: 1 and 10 SEC/MIN/HRS
- Individual adjustable ON-time and OFF-time
- Cycle can begin with relay energized or de-energized
- Relay rated 10A @ 250 VAC Resistive
- Compact Size (1/16 DIN)
- DPDT Relay Output
- Power: 20VAC to 240VAC 12VDC to 240VDC
- LED Indicator for Power and Relay energized output
- Can be DIN Rail mounted with DIN RAIL socket
- Faceplate IP40

DIMENSIONS (MILLIMETERS)

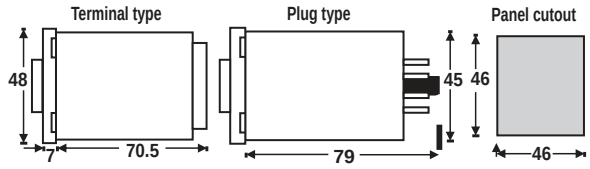

WIRING

8-PIN PLUG-IN TYPE

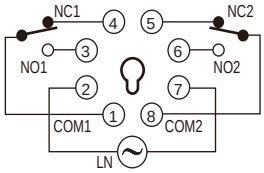

TERMINAL TYPE

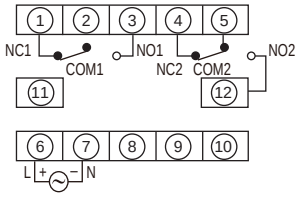

DIP SWITCH SETTINGS

Dip switch settings for time range selection

OFF TIME				ON TIME			
RANGE	SWITCH SETTING			RANGE	SWITCH SETTING		
	Sw1	Sw2	Sw3		Sw6	Sw7	Sw8
1 sec	OFF	OFF	ON	1 SEC	OFF	OFF	ON
1 min	ON	OFF	ON	1 MIN	ON	OFF	ON
1 hr	OFF	ON	ON	1 HR	OFF	ON	ON
10 sec	OFF	OFF	OFF	10 SEC	OFF	OFF	OFF
10 min	ON	OFF	OFF	10 MIN	ON	OFF	OFF
10 hr	OFF	ON	OFF	10 HR	OFF	ON	OFF

Dip switch settings for mode selection

Mode	Sw4	Sw5
OFF First	ON	OFF
ON First	OFF	ON

Switch setting example:

Off time range: 1sec
On time range: 10min
Mode :Cyclic off first

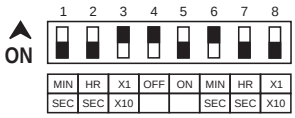

(Switch is Black Mark)

MODEL NUMBER

MODEL NUMBER	422AR	100	S	O	X
DPDT					
VOLTAGE					
20-240 VAC			S		
12-240 VDC					
CYCLE					
Repeat Cycle				O	
FEATURES					
Standard Unit					X

Note: Terminal connection model available as 422AR100S5TX with 5 amp relay only. Octal connection model available as 422AR100S5X with 5 amp relay only.

DIGITAL SETTING: The 425 is set digitally by rotating each setting knob until the desired Time Preset is displayed by the number wheels on the front of the timer. The digital setting allows exact, accurate and repeatable timing cycles.

HIGH ACCURACY: The 425 utilizes a crystal controlled oscillator which provides 0.1% timing accuracy across all rated voltages and temperatures.

CYCLE PROGRESS INDICATION: The 425 offers the industry's brightest green LED display in a 1/16 DIN package. Depending on the Model, the three-digit LED display will time UP to or DOWN from the Time Preset.

Through its internal micro controller, the 425 keeps track of the time setting by monitoring each of the three Time Preset switches. Whenever a change is made in the time preset, even during a cycle, the 425 instantly re-computes and adjusts the current timing cycle.

1/16 DIN HOUSING: The 48mm^2 (1/16 DIN) housing is compact, allowing the 425 to be panel mounted or plug-in using an 8-pin octal socket. The decimal point and SEC/MIN/HRS switches are located on the side of the unit. When panel mounted, these range switches are not accessible to the operator. This Tamper-proof feature prevents unauthorized or hazardous changes to the timing range.

MEMORY OPTION: The 425 can be ordered as standard with an EEPROM memory. This allows the 425 to retain the elapse time or time remaining during momentary or sustained power interruptions.

INSTANTANEOUS AND DELAYED RELAY VERSIONS: A version of the 425 is available with one set of SPDT instantaneous contacts and one set of SPDT delayed contacts.

DELAYED RELAY VERSION: A version of the 425 is available with DPDT delayed contacts.

MODEL 425A300Q10XX (SPDT INSTANTANEOUS & SPDT DELAYED RELAYS): Timing starts when power is applied to terminals 2 and 7. The instantaneous relay energizes, the LED digital display begins to increment from 0 and the timing LED blinks slowly. When the preset value is reached, the LED blinks rapidly and the Delayed SPDT relay is energized. The timer remains in this timed-out condition until reset by removing power.

MODEL 425A300Q20XX (DPDT DELAYED RELAY): Timing starts when power is applied to terminals 2 and 7. The LED display begins to increment from 0 and the timing LED blinks slowly. When the preset value is reached, the LED stops, the timing LED blinks rapidly and the Delayed DPDT relay energizes. The timer remains in this timed-out condition until reset by removing power.

MODEL 425A300Q10MX & MODEL 425A300Q20MX (MEMORY OPTION): Operation is same as above, however, units will not reset when power is removed during the timing cycle. Timers with this option can only be reset after time-out, or by adjusting the setting knobs to 000 during the timing cycle.

CAUTION: Be advised that the relay(s) will transfer when setting knobs are adjusted to 000 when power is applied.

E48329

1/16 DIN LED Digital Display Timer

- Easy-To-Read High Intensity Green LED Display
- Timing From .01 SEC to 999 Hrs in One Unit
- Switch Selectable Timing Ranges Are Tamper Proof When Panel Mounted
- Timing LED Indicates Output Relay Status
- Time Preset Can Be Adjusted While Timing
- EEPROM memory Option Standard Feature
- Passes NEMA Showering Arc Noise Test
- Panel Mounting or 8-pin Octal Plug-in mounting
- Timing Up to or Down From the Set Point

MODEL NUMBER

MODEL NUMBER	425A	300	Q			
RANGE						
0 to 9.99 or 99.9 or 999 SEC,MIN,HR		300				
VOLTAGE & FREQUENCY						
120 VAC 50/60 Hz			Q			
OUTPUT ARRANGEMENT						
Instantaneous Relay (SPDT), Delay Relay (SPDT)				10		
Delay Relay (DPDT)				20		
MEMORY						
Standard-No Memory					X	
With Memory (EEPROM					M	
FEATURES						
Standard (Time Up)						X
Standard (Time Down)						D
Special						K

ACCESSORIES 8-PIN

8-Pin surface/DIN rail socket	000-825-85-00
Hold down clips for above socket	407-025-13-00
Panel mounting bracket	405-320-02-00
Plug-in socket kit (8-pin)	319-261-45-00
8-Pin socket w/rear facing terminals	000-825-90-00

TYPICAL CIRCUITS

425A300Q10XX

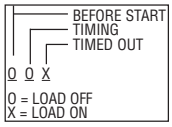

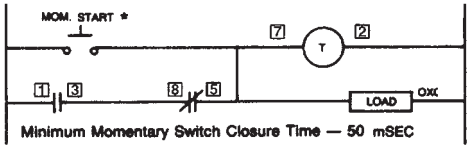

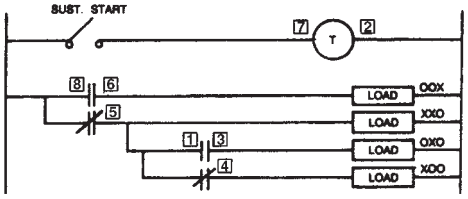

RELAY	CONTACTS	Before Start	During Timing	End of Cycle
Instantaneous	1-3			
	1-4			
Delayed	8-6			
	8-5			

425A300Q20XX

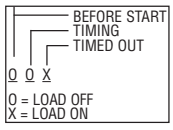

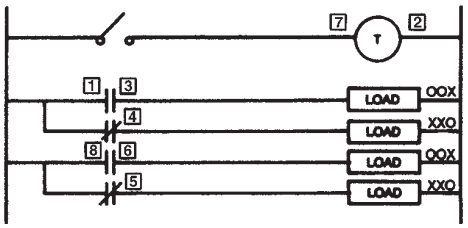

RELAY	CONTACTS	Before Start	During Timing	End of Cycle
Instantaneous	1-3			
	1-4			
Delayed	8-6			
	8-5			

SPECIFICATIONS

MODELS	425A300Q10XX	ON-Delay Time Up
	425A300Q20XX	ON-Delay Time Up
	425A300Q10XD	ON-Delay Time Down
	425A300Q20XD	ON-Delay Time Down
RANGES	Switch Selectable, 0 to 9.99,99.9 or 999 Sec/Min/Hrs	
LOAD RELAY	TYPE	Q10 Models: SPDT, Q20 Models: DPDT
	LIFE	10 Million operations (no load)
	CONTACT RATING	5 AMPS Resistive, 1/10 HP @ 120 VAC
TEMPERATURE RATING	0° to 140°F (-18° to 60°C)	
NOISE IMMUNITY	Showering ARC per NEMA ICS 2-230, the 425A will withstand a voltage surge of 4500 volts for 50 microseconds without damage	
MOUNTING	8-Pin Octal plug-in base, Panel Mounting Bracket	
POWER REQUIREMENTS	120 VAC, 50/60 Hz;(10%,-20%); 5 WATT maximum	
REPEAT ACCURACY	± .1% over rated voltages	
RESET TIME	100 mSEC minimum	
DISPLAY	Cycle Progress	3 Digit Green LED Display, seven segment numeric
	Timing LED	Red LED blinks slowly (once per second) during timing; blinks rapidly after time out.
MEMORY...MX MODELS	EEPROM 100,000 read/write cycles	
HOUSING	1/16 DIN (48mm x 48mm) Housing	
WEIGHT	5 oz. (140 g) **SHIPPING:** 1 lb.	

DIMENSIONS (INCHES/MILLIMETERS)

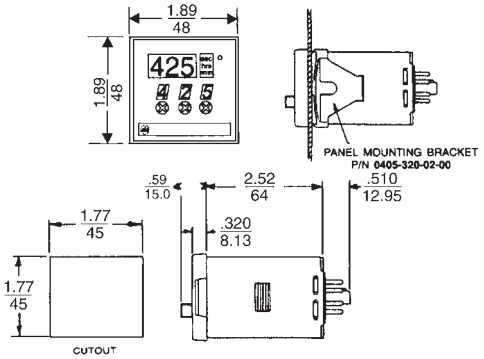

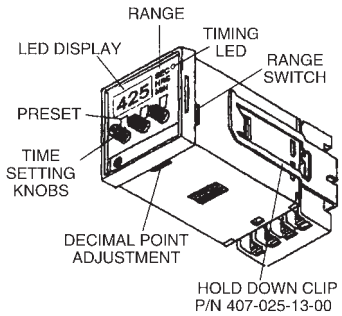

WIRING

MODEL 425A300G10XX, XD
425A300G10MX, MD

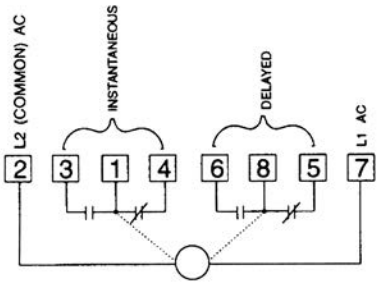

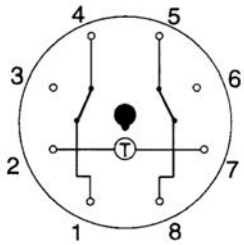

Bottom View of Timer

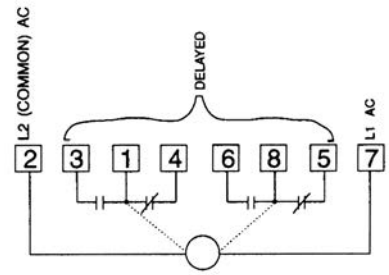

MODEL 425A300G20XX, XD
425A300G20MX, MD

The 5708A model is an all in one unit that can be used as a timer, counter, frequency meter, and a tachometer. This unit contains 23 functions (15 timer, 6 counter, frequency meter, & tachometer), which are selectable through the set up menu. Engineered with a unique battery cover design for easy battery replacement, this unit needs no external power source.

- Functions as a Timer, Counter, Frequency Meter or Tachometer
- 8-digit High Resolution LCDI
- Front IP66 Water Protection
- 15 Selectable Display Options
- Battery Operated

TIMER
Display Unit day/hour/min/sec
15 Display functions(Selectable)

COUNTER
Frequency Response is programmable for elimination of outside Switch key-bounce, and edge trigger.

<50 cps (rising and falling edge)

<100 cps (rising and falling edge)

<600 cps (rising and falling edge)

FREQUENCY METER

Response Frequency	2.5 Hz - 1300 Hz
4-digit display	2.500 - 1300 Hz

TACHOMETER

RPM range	150 RPM - 78,000 RPM
Max. 5-Digit Display	150-78,000

Multi-Function Timer-Counter

SPECIFICATIONS

RESET	Front Panel / Remote
DISPLAY	LCD (8mm high)
NUMBER OF DIGITS	8
MAX. 5-DIGIT DISPLAY	150 - 78,000
COUNT IINPUT	Switch Closure Dry Contact
OPERATING TEMPERATURE	14° to 131°F (-10° to 55°C)
OPERATING POWER	LR44 Battery
MOUNTING	1/32 Din
FRONT WATER PROTECTION	IP66
SCREW TYPE	M3
WEIGHT	1.164 oz.
VIBRATION	IEC 60068-2-6
IEC 60068-4-2	4KV Air/2KV Contact
IEC 60068-4-3	10V/m (80MHz to 1GMHz)
IEC 60068-4-4	1KV Input

DIMENSIONS (MILLIMETERS)

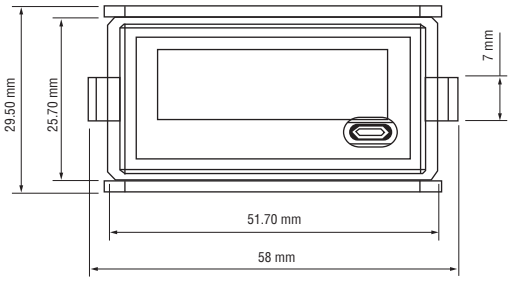

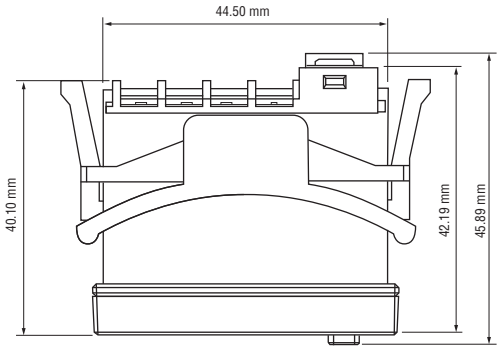

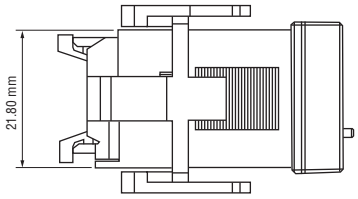

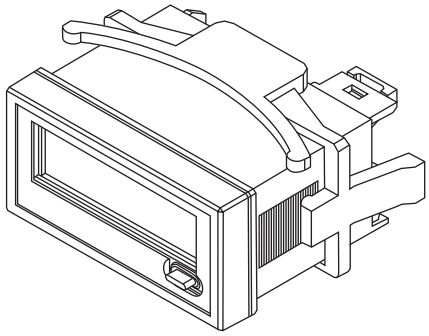

ORDERING INFORMATION

MULTIFUNCTIONING TIMER-COUNTER	**5708A**

The ATC 7DT-2CH, Din Rail Timer is ideally suited for timing applications needing a daily or weekly schedule. The clear LCD display provides visible indication of output, mode, day and time. With two independent channels and 16A contacts, the powerful 7DT-2CH delivers high accuracy in a convenient DIN Rail mounting package.

7-Day Timer

Two Channel version 7DT-2CH

- Daily, weekly program in one device
- Two independent channels of control
- Switching: according to the program (AUTO)/or manually
- High accuracy of timing due to special calibration
- Easy programming via 4 keys, clear LCD display, min. interval 1 sec.

MODEL NUMBER

MODEL NUMBER	Description
7DT-2CH	Digital Timer

DIMENSIONS

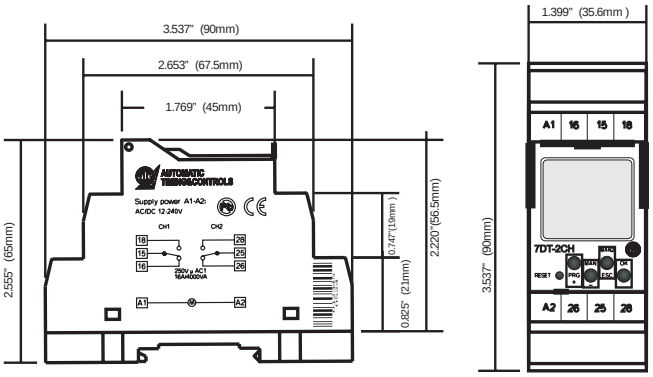

SPECIFICATIONS

SUPPLY TERMINALS	A1-A2
SUPPLY VOLTAGE	AC/DC 12-240 V (AC 50-60 Hz)
CONSUMPTION	AC 0.5-2 VA / DC 0.4-2 W
SUPPLY VOLTAGE TOLERANCE	-15%; +10%
SUMMER/WINTER TIME	Automatic

OUTPUT

CONTACTS	2–SPDT
RATED CURRENT	16A AC
INRUSH CURRENT	30 A / <3 sec
SWITCH VOLTAGE	250 VAC / 24 VDC
MIN. BREAKING CAPACITY DC	500 mW
MECHANICAL LIFE	$>3x10^7$

TIME CIRCUIT

POWER BACK-UP	3 years
ACCURACY	Max. ± 1s/day at 20°C
MINIMUM INTERVAL	1 sec
DATA STORED FOR	10 years min.

OTHER INFORMATION

OPERATING TEMPERATURE	-20 to +60°C (-4° to 140°F)
STORAGE TEMPERATURE	-30 to +70°C (-22° to 158°F)
ELECTRICAL STRENGTH	4kV (supply-output)
MOUNTING	DIN Rail EN 60715
PROTECTION DEGREE	IP 20
MAX. CABLE SIZE	Without Cavern: Max. 2 x 1.5mm², 2 x 2.5mm² With Cavern: Max. 2 x 1.5mm², 1 x 2.5mm²
DIMENSIONS	90 x 35.6 x 64 mm (3.543" x 1.402" x 2.520")
WEIGHT	130g (4.586 OZ)
STANDARDS	EN 61812-1, EN 61010-1

PROGRAM CIRCUIT

PROGRAM	Daily, Weekly
DATA READOUT	LCD Display

Through advanced circuit design and packaging technology, the ON-Delay ATC 313 packs all of the performance of a conventional plug-in TDR in a space-saving housing. It features a digital timing circuit which ensures high repeat accuracy and excellent noise immunity.

MINIATURE HOUSING: You can mount several ATC 313 timers in the same space as a single conventional TDR.

DIGITAL ACCURACY: A custom C-MOS integrated circuit accurately measures the dial-adjustable delay by counting the output of an internal oscillator. Repeat accuracy remains high even with variations in voltage, temperature and reset time.

STATUS INDICATORS: Two LEDs clearly indicate the operational status of the 313: one is energized when power is applied; the other is off during the delay period and on at time-out.

INDUSTRIAL QUALITY: With a load relay capable of switching 7A resistive loads and a C-MOS design that protects components against noise and voltage transients, the 313 is built for industrial use.

Plug-In Adjustable TDR

SPECIFICATIONS

4 RANGES (AND MINIMUM SETTINGS)	0.1 -1.0 SEC.	
	0.5 - 10.0 SEC.	
	3 SEC. - 1 MIN.	
	30 SEC. - 10 MIN.	
LOAD RELAY	TYPE	2 Form C
	LIFE AC	50,000,000 operations (no load)
	LIFE DC	100,000,000 operations (no load)
TEMPERATURE RATING	15° to 120°F (-10° to 50°C)	
CONTACT RATING	7A resistive 1/10 HP at 120V	
MOUNTING	Plug-in optional surface-mounting socket with screw terminals; optional PC board mount socket and wire wrap	
POWER REQUIREMENTS	120 VAC	80 to 132V, 50/60 Hz, 20 mA
	240 VAC	160 to 242V, 50/60 Hz, 13 mA
SETTING ACCURACY	± 10% of range at full scale	
REPEAT ACCURACY	± 1% of setting or 10 ms when temperature and voltage are constant	
	± 7% of setting when temperature and voltage change within specified operating limits	
RESET TIME	0.1 SEC during timing and at least 15 ms after time out	
HOUSING	Dust, moisture and impact-resistant molded polycarbonate	
WEIGHT	NET: 2 oz. SHIPPING: 4 oz.	

MODEL NUMBER

MODEL NUMBER	313B	10			
VOLTAGE & FREQUENCY					
120 VAC, 50/60 Hz			Q		
240 VAC, 50/60 Hz			R		
ARRANGEMENT					
On-Delay				1	
Special				0	
FEATURES					
Standard					X
Special					K

ACCESSORIES	
Surface Mounting Socket	000-825-81-00
PC Board Socket	000-825-82-00

DIMENSIONS

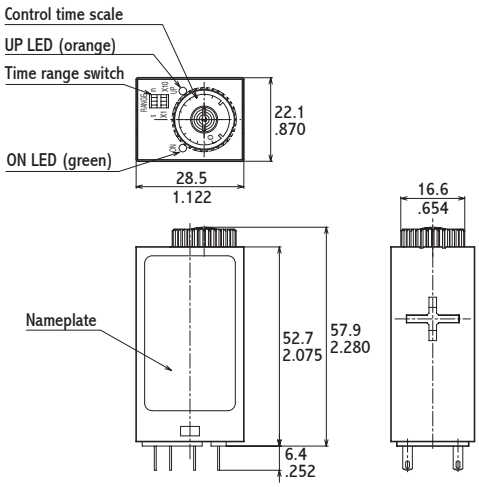

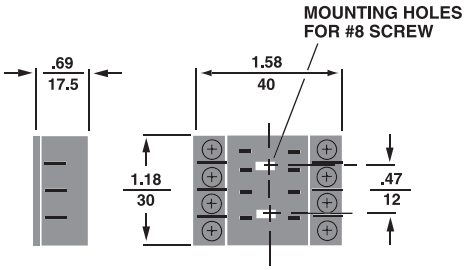

Optional Surface mounting Socket

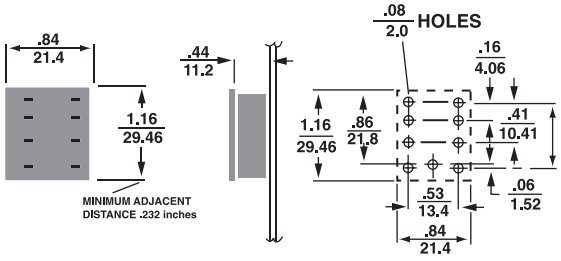

Optional Socket for PC Boards

WIRING

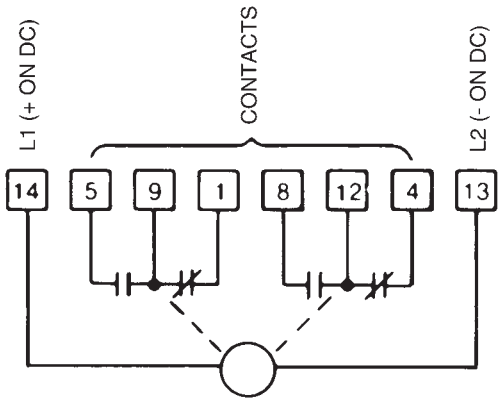

TERMINAL WIRING

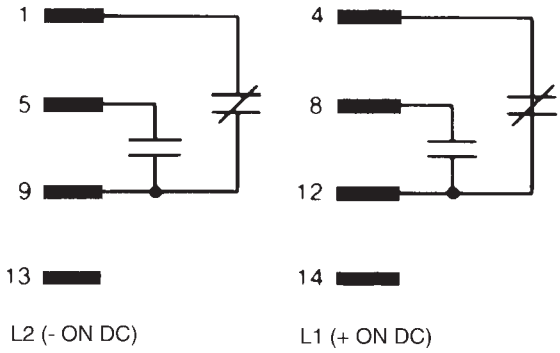

The ATC 314 is an economical multi-range solid-state TDR with two models; one for off-delay (delay-on-break) and one for interval-on-delay operation. With three dial-selected adjustable ranges, it provides any timing period between 0.035 and 100 SEC with excellent repeat accuracy even with wide changes in voltage, temperature and reset time.

OFF-DELAY MODEL: Presuming the AC line is energizing the unit continuously, when the start switch is closed the relay energizes, the pilot light goes on and the unit resets. Opening the start switch begins the timing cycle. A relaxation oscillator runs at a rate determined by the set pot. When the oscillator count is equal to the level set by the range switch, a digital count circuit is satisfied and the unit times out.

At time out, the timing circuit and relay are de-energized and the pilot light goes off. Closing the start switch resets the unit. After a power failure (or on first startup) the unit will go to the timed out condition (relay de-energized) until the unit is reset by closing the start switch to begin a new cycle.

INTERVAL-ON-DELAY MODEL: Timing begins when the start switch is closed; simultaneously the relay is energized and the pilot light goes on. Either a momentary/sustained start or a sustained start input can be used (see wiring). Reset is accomplished by de-energizing the unit. At time-out, the timing circuit and relay are de-energized and the pilot light goes off.

E48329

Plug-In Multi-Range Off-Delay/Interval

WIRING

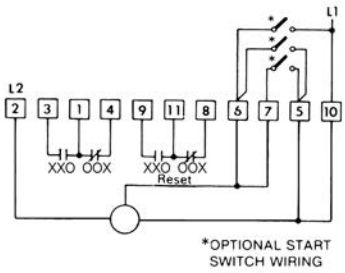

OFF-DELAY (Delay on Break) (Drawn power off-relay de-energized)

INTERVAL-ON-DELAY Momentary or Sustained Start Sustained Start*

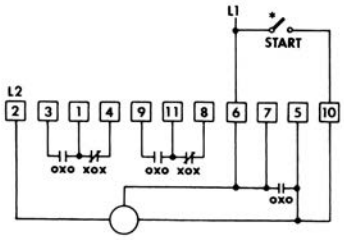

*Replace start switch with jumper for sustained start only

TERMINAL WIRING

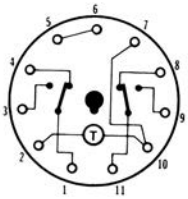

OFF DELAY

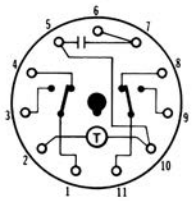

INTERVAL/ON-DELAY

11 PIN SURFACE MOUNT SOCKET

MODEL NUMBER

MODEL NUMBER	314B				
RANGE					
Three dial-selected ranges (1 SEC,10 SEC,100 SEC)		134			
Special		000			
VOLTAGE & FREQUENCY					
120 VAC, 50/60 Hz			Q		
240 VAC, 50/60 Hz			R		
Special			K		
ARRANGEMENT					
Off-Delay mode				2	
Interval mode				3	
FEATURES					
Standard					C
Special					K

ACCESSORIESA	
Surface Mounting Socket	000-825-63-00
Retaining clip for use with socket	319-025-06-00
Panel mount bezel kit	319-261-44-00
Panel mount socket kit	314-260-07-00

SPECIFICATIONS

MODELS	OFF-Delay mode Interval mode	
RANGES AND MINIMUM SETTINGS	Three dial-selected adjustable ranges	
	0.035–1.0 SEC	
	0.18–10 SEC	
	1.8–100 SEC	
LOAD RELAY CONTACT RATING	TYPE	DPDT, hard wired
	LIFE	50,000,000 operation (no load)
	CONTACT RATING	7A resistive at 120 or 240V 1/10 HP at 120V
TEMPERATURE RATING	32 to 158° F (0 to 70° C)	
MOUNTING	PLUG-IN	11-PIN BASE;mounts in any position
	OPTIONAL: surface-mounting socket panel-mounting bezel kit plug-on socket kit	
POWER REQUIREMENTS	120 VAC	95 to 132V, 50/60 Hz, 0.02A
	240 VAC	190 to 264V, 50/60 Hz, 0.02A
SETTING ACCURACY	10% at full scale	
REPEAT ACCURACY	Varies as a function of line voltage and temperature but not of reset time (see Recycle Characteristics)	
	± 1% of setting or 2.0 mSEC, when temperature is constant and line voltage is constant or varies within limits*	
	± 4% of setting or 2.0 mSEC, when line voltage is constant and temperature varies within limits*	
	± 6% of setting or 2.0 mSEC, when line voltage and temperature vary within limits*	
	*Variations of line voltage must be within 95 and 132V; of temperature between 0° and 70°C (32° and 158°F);and reset/start time must be at least 75 mSEC.	
RESET TIME	OFF-DELAY: 75 mSEC during timing or after time-out	
START	INTERVAL-ON-DELAY: 45 mSEC (for momentary start wiring)	
POWER INTERRUPTION	OFF-DELAY	A power failure over 5 mSEC during timing will cause relay drop-out. If power is restored in up to 75 mSEC, the unit will re-energize its relay and continue timing. If the power loss is over 75 mSEC the unit will lock in to the timed-out (relay de-energized) position until reset.
	INTERVAL-ON-DELAY	A power failure over 5 mSEC causes relay drop-out. Restoring power in up to 75 mSEC will re-energize the relay and timing will continue. A power loss over 75 mSEC will always reset the timer fully.
HOUSING	Dust, moisture and impact-resistant molded plastic case	
WEIGHT	NET: 6 oz.	SHIPPING: 10 oz.

DIMENSIONS (INCHES/MILLIMETERS)

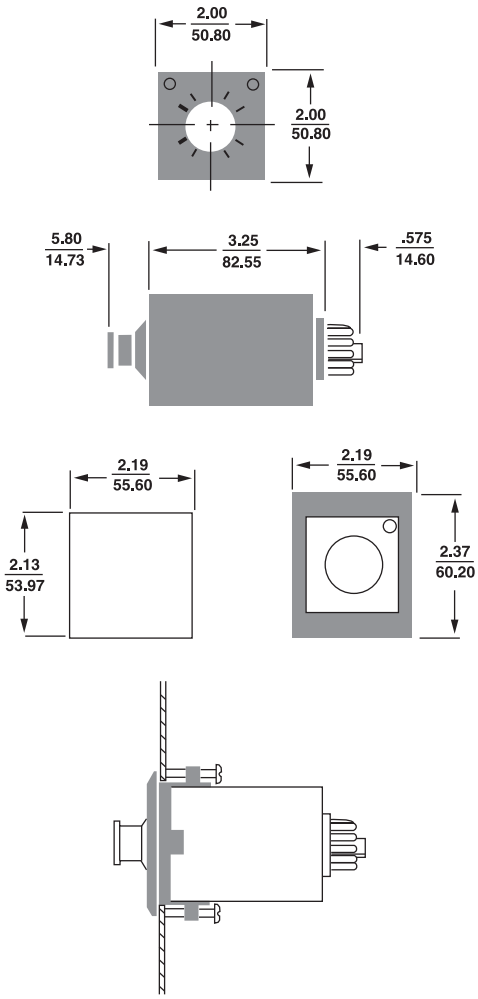

An economical ON-delay solid-state TDR with octal plug-in base, the ATC 319 maintains excellent repeat accuracy despite wide voltage and temperature variations, even after long periods of down-time. One model has five dial-selected adjustable ranges and provides any timing period between 0.02 SEC and 30 MIN.

WIDE CHOICE OF RANGES: In addition to the short ranges expected of an electronic TDR, the 319 is also available with ranges as long as 100 minutes, for AC or DC operation. An unusually versatile model, the 319 five ranger has five dial-selected ranges—from 0.3 SEC to 30 MIN—and provides any dial-adjustable timing period between 0.02 seconds and 30 minutes; (1, 10 and 100 SEC and 10 and 100 MIN). A single 319 model thus accommodates the needs of a wide range of applications, allowing the user to select--easily and precisely--an appropriate range to permit optimum setting accuracy. The dial face automatically displays the selected range. The 319 offers a choice of five dial-adjustable fixed ranges between 1 SEC and 30 SEC.

CYCLE PROGRESS INDICATION—MODEL 319E: All options incorporate a light-emitting diode (LED) which is on during the time cycle, off at the end of timing. The 5-range option also includes a second LED which separately indicates the status of the output relay: on when energized, off when de-energized.

HIGH ACCURACY: The 319's timing circuit is not subject to the large plus error that plagues many electronic TDRs after long periods of down-time: it maintains rated accuracy regardless of reset time variations, provided that there is at least 0.1 SEC between cycles for Model 319. All models hold unusually high repeat accuracy in the face of wide voltage and temperature swings.

E48329

Plug-In Adjustable AC/DC TDR

OPERATIONS

Timing begins when the start switch is closed. At the same time, the Timing LED goes on and a relaxation oscillator starts to run at a rate determined by the set-pot. The 319 times out when the oscillator count is equal to the level set by the range switch, a second LED turns on at time-out. At time-out, the load relay is energized, transferring its contacts. Reset occurs when the start switch is opened or when power is interrupted.

MODEL NUMBER

MODEL NUMBER	319E		F		
RANGE					
Five dial-selected ranges (0.3 SEC., 3 SEC., 30 SEC., 3 MIN, 30 MIN)		030			
1 SEC., 10 SEC, 100 SEC, 10 MIN, 100 MIN		100			
VOLTAGE & FREQUENCY					
24-240 VAC, 24 VDC			F		
ARRANGEMENT					
On-Delay				1	
Special				0	
FEATURES					
Standard					C
Special					K

ACCESSORIES

Surface/DIN rail mounting socket	000-825-85-00
Surface mounting socket	000-825-64-00
Retaining clip for mounting socket	319-025-06-00
Panel mount bezel kit	319-261-44-00
Panel mount socket kit, 8-pin	319-261-45-00

WIRING

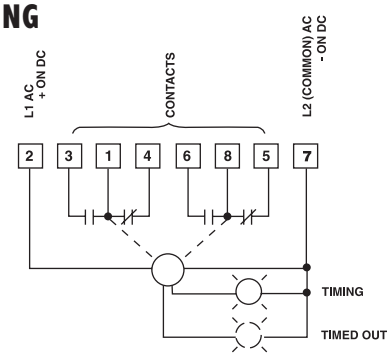

** Relay contacts to be wired with same polarity.

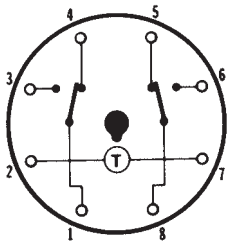

TERMINAL WIRING

SPECIFICATIONS

MODELS	319E–AC or DC; 5 dial-selected adj. ranges All models operate in on-delay mode only.	
RANGES AND MINIMUM SETTINGS	Model 319E-030F	0-0.3 SEC – 0.02 SEC 0-3.0 SEC – 0.07 SEC 0-30.0 SEC – 0.6 SEC 0-3.0 MIN – 3.5 SEC 0-30.0 MIN – 35.0 SEC
	Model 319E-100F	0-1 SEC – .003 SEC 0-10 SEC – .1 SEC 0-100 SEC – 1 SEC 0-10 MIN – 6 SEC 0-100 MIN – 60 SEC
LOAD RELAY CONTACT RATING	TYPE	DPDT (2 Form C)
	LIFE	AC: 50,000,000 operations (no load) DC: 100,000,000 operations (no load)
	CONTACT RATING	AC: 7A resistive at 120 or 240V DC: 3A at 30V
TEMPERATURE RATING	32° to 131°F (0° to 55°C)	
MOUNTING	Plug-in octal base; mounts in any position	
	OPTIONAL: Surface-mounting socket; panel-mounting bezel kit and plug-on socket kit for Model 319E.	
POWER REQUIREMENTS	24 - 240 VAC or 24 VDC	
SETTING ACCURACY	10% at full scale	
REPEAT ACCURACY	Varies as a function of line voltage and temperature but not of reset time (see Recycle Characteristics)	
	± 1% of range or 2.0 mSEC (whichever is greater), when temperature is constant and line voltage is constant or varies within limits*	
	± 4% of range or 2.0 mSEC (whichever is greater), when line voltage is constant and temperature varies within limits*	
	± 6% of range or 2.0 mSEC (whichever is greater), when line voltage and temperature vary within limits*	
	*Variations of line voltage must be within 95 and 132V; of temperature between 32° and 158°F (0° and 70°C)	
RESET TIME	5 mSEC if power is interrupted any time after time-out; 70mSEC if power is interrupted during timing.	
RECYCLE	When 0.1 SEC or longer of reset time is allowed after time-out or after power interruption, the next cycle is timed at full repeat accuracy; when only 0.07 SEC is allowed, the next cycle is shortened by as much as 1%.	
HOUSING	Dust, moisture and impact-resistant molded plastic case.	
WEIGHT	NET: 6 oz.	SHIPPING: 10 oz.

DIMENSIONS (INCHES/MILLIMETERS)

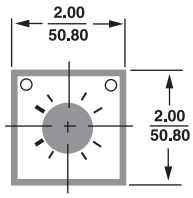

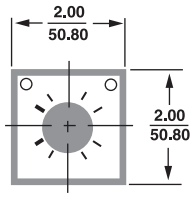

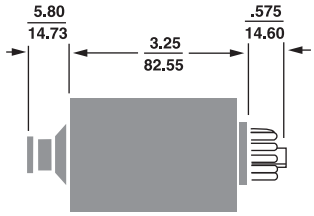

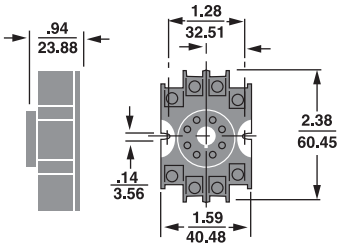

8 PIN OPTIONAL OCTAL SOCKET

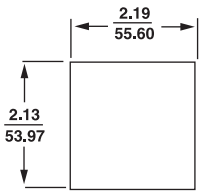

CUT OUT

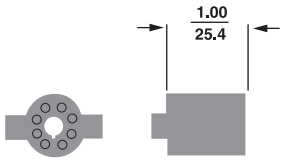

8 PIN
PANEL MOUNT SOCKET

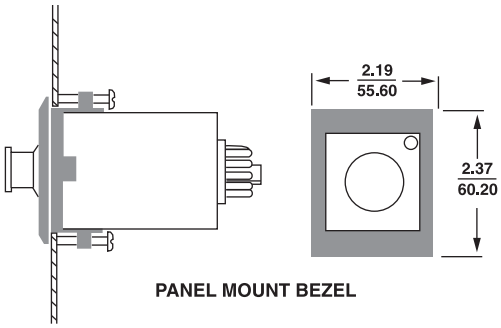

PANEL MOUNT BEZEL

A versatile dial-adjustable time delay relay, the ATC 328 provides a choice of ON-delay, OFF-delay or interval operation for any timing period between 50 mSEC and 10 hours–all in the same timer. Based on a unique digital circuit,it features cycle progress annunciation and is suitable for the most demanding industrial service.

DESIGNED FOR INDUSTRIAL SERVICE: With a load relay that is rated for 100,000,000 mechanical operations,and power supply that protects circuit components against the voltage transients that are typical of industrial plants, the 328 has a long life expectancy even in tough environments.

CYCLE PROGRESS INDICATION: The 328's LED annunciator provides a unique and extremely effective method of cycle progress indication. Off before timing, the LED blinks at an ever-increasing rate as the cycle progresses: once every 3-1/2 seconds during the first 10% of the cycle, twice during the second 10%,and so on. At time-out, the LED stays on constantly, pulsing at a high rate.(In the 1 and 10-second ranges, the LED is off before timing, steady on during timing,and pulsing on after time-out.)

VERSATILE MOUNTING: The standard 328 has an 11-pin base which accepts push-on connectors or plugs into a surface-mounted socket. Since all connections are made to the socket, the 328 is readily removed without disturbing the wiring. It is also available with an optional quick-connect plug and brackets for flush panel-mounting.

MULTIPLE RANGES REDUCES INVENTORY: Because the 328 has six switch-selected ranges–from 1 SEC to 10 hours–each timer can provide any dial-adjustable timing period between 50 ms and 10 hours—thus greatly reducing inventory requirements especially for large users. The range selector switch knob can be easily removed to prevent unauthorized range change.

HIGH ACCURACY: The 328's digital circuit maintains rated accuracy from cycle to cycle,regardless of reset time. Its oscillator-based circuit is also effectively compensated for changes in temperature and voltage and thus achieves excellent overall accuracy.

VERSATILE CONTROL CAPABILITY: Every 328 can be used for either ON-Delay, OFF-Delay or interval operation, depending on how its terminal block is wired.

OPERATIONS

Control action of the 328 depends on how its terminal block is wired (see Wiring diagrams.)

In **ON-DELAY OPERATION**, timing begins when the start switch is closed. The load relay contacts transfer at the end of the timed period. Reset occurs when the start switch is opened or when there is a power interruption.

In **OFF-DELAY OPERATION**,timing begins when the start switch is opened. The load relay contacts transfer at the end of the timed period and back again at reset. Reset occurs when the start switch is closed. Control action of all loads is delayed, either closed-closed-open or open-open-closed.

In **INTERVAL CONTROL**,timing begins when the start switch is closed. The load relay contacts transfer at the beginning and at the end of the timed period, thus providing true interval control,either open-closed-open or closed-open-closed. The start signal may be either sustained or momentary;in the latter case, the start signal is "latched in" by wiring it to one of the load relay's two sets of contacts. Power interruption resets the timer.

E48329

FM APPROVED

Multi-Range Timer

MODEL NUMBER

MODEL NUMBER	328E	200	F		
RANGE Six Knob Selectable Ranges (1 or 10 SEC/MIN/HRS)		200			
VOLTAGE & FREQUENCY 24 VAC to 240 VAC and 24 VDC			F		
ARRANGEMENT					
Reset on power failure				10	
Special,use K in features				00	
FEATURES					
Standard					XX
Special					XK

ACCESSORIES

DIN/Surface Mount Socket with hold down clips	000-825-89-99
DIN/Surface Mount Socket	000-825-89-00
Panel Mounting Plug-In Socket	328-260-01-00
Panel Mounting Kit Consisting of Gasket and 2 Clamps	328-260-02-00

WIRING

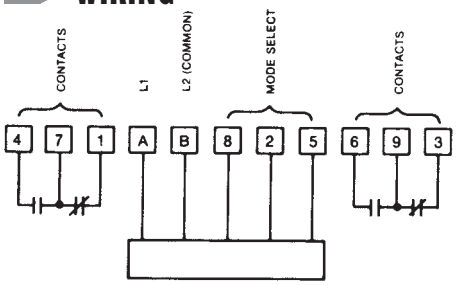

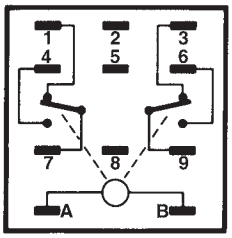

TERMINAL WIRING

The 328E Replaces 328A, 328B, 328C, 328D

SPECIFICATIONS

MODELS	One model provides all ranges and control modes. 328E200F10XX	
RANGE	Six switch-selected ranges:	
	1 SEC	
	10 SEC	
	1 MIN	
	10 MIN	
	1 HR	
	10 HR	
MINIMUM SETTING	2% of range,except 50 ms on 1 SEC range.	
LOAD RELAY	TYPE	DPDT
	LIFE	100,000,000 operations (no load)
	CONTACT RATING	AC: 10 A (resistive) at 125-250V.1/8 HP DC: 10A at 30 VDC.
TEMPERATURE RATING	0° to 140° F (-18°C to 60°C)	
MOUNTING	11 blade case plugs into matching socket with 11 screw terminals; blades also accept 0.187" push-on connectors.	
	OPTIONAL: kit provides 11-pin plug-in socket and 2 brackets for flush panel mounting.	
POWER REQUIREMENTS	24 VAC to 240 VAC and 24 VDC	
	AC	(+10%,-20%) 50/60Hz
	DC	(+20%,-20%)
	Maximum Ripple @ 100 Hz -5%	
SETTING ACCURACY	10% of range	
REPEAT ACCURACY	Varies with changes in line voltage and ambient temperature but not with reset time: ±0.5% of setting or 15 mSEC over the entire voltage and temperature range.	
TIMING MODES	ON-Delay/OFF-Delay/Interval	
INDICATOR	Timing LED	
RESET TIME	ON-DELAY	100 mSEC max.
	OFF-DELAY	50 mSEC max.
	INTERVAL	100 mSEC max.
HOUSING	Plug-in design; dust, moisture and impact-resistant molded plastic case. DIN size (48mm x 96mm)	
WEIGHT	NET: 7 oz.	SHIPPING: 1 lb.

TYPICAL INSTALLATIONS

- (T) TIMING CIRCUIT
- ○ INDEPENDENT LOADS
- ● DEPENDENT LOADS
- MOMENTARY STARTING CONTACT
- SUSTAINED STARTING CONTACT
- X LOAD ENERGIZED
- O LOAD DE-ENERGIZED

All timers shown in "before start" position. Diagrams shown with power off unless otherwise marked. Maximum load current through any load carrying contact is 10 amperes.

DELAY-ON-MAKE

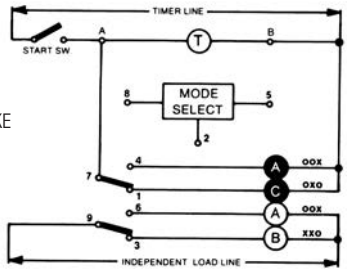

ONE-SHOT

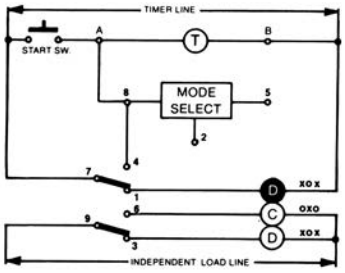

OFF-DELAY (SHOWN WITH POWER ON)

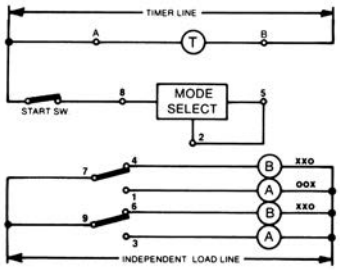

INTERVAL

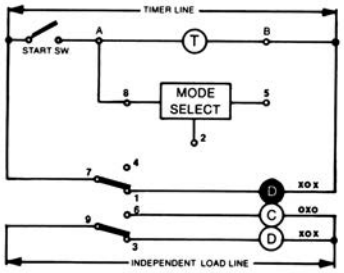

DIMENSIONS (INCHES/MILLIMETERS)

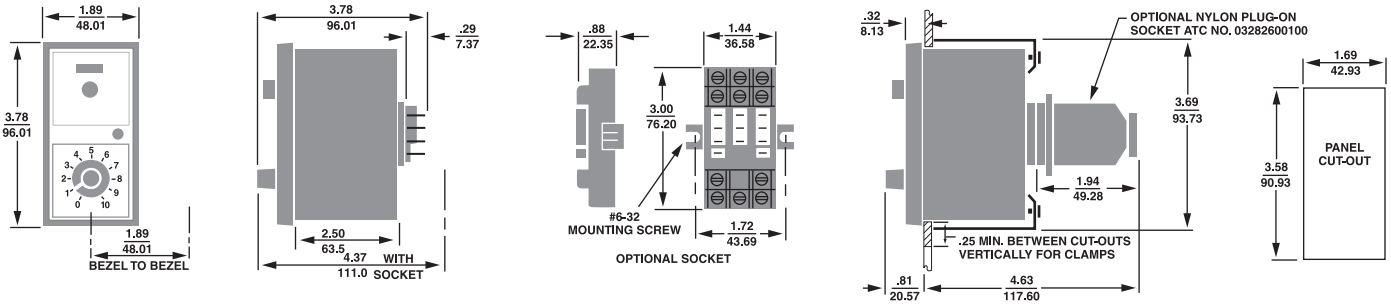

The 329 on-delay TDR with plug-in base maintains excellent repeat accuracy despite wide voltage and temperature variations. A choice of seven ranges are available from 1 second to 3 minutes.

Performance Value: Ruggedly designed into a 36 x 36 mm housing, the 329 On-Delay TDR combines both highly accurate and repeatable timing with industrial quality that is usually found in only the more expensive timers.

CHOICE OF RANGES: The 329 is offered in a choice of seven different ranges between 1 second to 3.0 minutes to permit optimum setting accuracy. The dial face clearly displays the range.

DESIGNED FOR INDUSTRIAL SERVICE: The 329 incorporates features designed to ensure a long trouble-free life expectancy, even in difficult industrial environments: high impact resistant housing with octal plug-in base that is easily surface/DIN or panel mounted; a DPDT 5 amp relay rated for 10 million operations at no load; and an oscillator-based timing circuit for high accuracy even with changes in temperature and voltage.

HIGH ACCURACY: The 329's timing circuit is not a simple RC circuit, but it utilizes the sophistication of a proprietary integrated circuit that includes counting technology along with a stable oscillator to provide repeatable time delays.

Timing begins when the start switch is closed. This starts an oscillator which runs at a frequency determined by the time setting. A fixed number of counts from the oscillator determines the end of the time cycle. The time required to accomplish this depends on the oscillator frequency.

LISTED
IND. CONT. EQ.
101F
E48329

Solid-State Time Delay Relay

SPECIFICATIONS

At time out, the built-in relay transfers its contacts. These contacts remain transferred until the start switch is opened or power is removed by some other means. The 329 then resets and is ready for another cycle.

WIRING

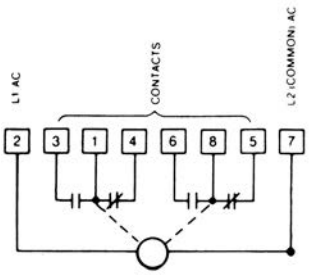

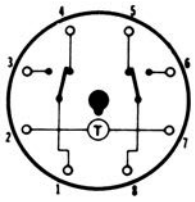

TERMINAL WIRING

TYPICAL CIRCUIT ON-DELAY

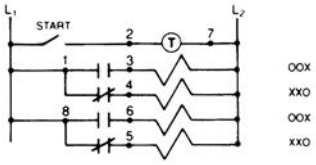

MODEL NUMBER

MODEL NUMBER	329A		Q		
RANGE					
1 SEC		362			
3 SEC		363			
5 SEC		364			
10 SEC		365			
30 SEC		366			
1 MIN		367			
3 MIN		368			
Special		000			
VOLTAGE & FREQUENCY					
120 VAC, 50/60 Hz			Q		
ARRANGEMENT					
ON-Delay				1	
Special				0	
FEATURES					
Standard					X
Special					K

ACCESSORIES	
8-Pin surface/DIN rail socket	000-825-85-00
Hold down for above socket (2 required)	339-025-03-00
Plug-in socket kit (8-pin)	319-261-45-00

SPECIFICATIONS

RANGE	Choice of 7 fixed ranges	
	1.0 SEC	30.0 SEC
	3.0 SEC	1 MIN
	5.0 SEC	3 MIN
MINIMUM SETTING	5% of range, plus 50 mSEC on 1.0, and 3.0 SEC ranges.	
LOAD RELAY	TYPE	DPDT 5 Amps resistive at 30 VDC or 240 VAC (or less) 1/8 HP @ 120 VAC 1/4 HP @ 240 VAC 240 VA @ 240 VAC
	LIFE	100,000 operations at full load: 5 A at 30 VAC (or less) resistive 5 A at 240 VAC (or less) resistive 10 million operations with no load
	CONTACT MATERIAL	Silver Nickel
TEMPERATURE RATING	0° to 131°F (-17° to 55° C)	
MOUNTING	Plug-in octal base; mounts in any position with retaining clips.	
	OPTIONS:	Surface mounting socket DIN rail mounting socket Panel-mounting adapter kit Plug-on socket Rear facing terminal socket.
POWER REQUIREMENTS	95 to 132 VAC, 50/60 Hz Running - 0.02A	
SETTING ACCURACY	± 15%	
REPEAT ACCURACY	Varies as a function of line voltage and temperature but not of reset time.	
	a	±2.0% at constant voltage, and full temperature range. (or ±25 mSEC, whichever is greater)
	b	±1.5%* at constant temperature and full voltage range. (or ±25 mSEC, whichever is greater)
	c	±3.5%* over full voltage and temperature range. (or ±30 mSEC, whichever is greater). Variations of line and voltage must be within 95 and 132V; of temperature between -17 and 55°C (0 and 131°F)
	*Variation from average actual time	
MODE OF OPERATION	All models operate in ON-delay mode only	
RESET TIME	a	0 to 20 mSEC power interruption; guaranteed no reset
	b	20 mSEC to 100 mSEC; it may reset. (40 mSEC typical reset)
	c	Over 100 mSEC guaranteed to reset
WEIGHT	0.2 lbs	

DIMENSIONS (INCHES/MILLIMETERS)

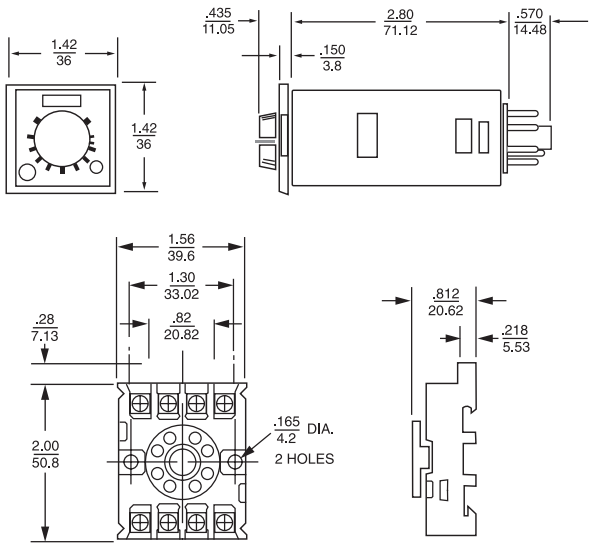

8 PIN OPTIONAL OCTAL SOCKET NO. 00008258500

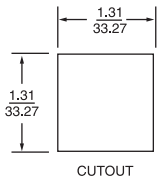

CUTOUT

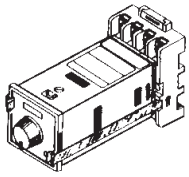

00008258500
SOCKET WITH
339-025-03-00
HOLD DOWNS

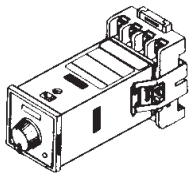

TYPICAL OTHER
SOCKET WITH
339-025-02-00
HOLD DOWNS

The 339B is a solid-state TDR with octal plug-in base that maintains excellent repeat accuracy despite wide voltage and temperature variations even after long periods of down-time. The 339B has six dial selected ranges from fractions of a second to as long as 10 hours and selectable on-delay or interval timing modes. Fixed timing units are available upon request.

WIDE CHOICE OF RANGES: In addition to the short ranges expected of an electronic TDR, the 339 is also available with ranges as long as 10 hours. An unusually versatile timer, the 339 has six dial-selected ranges—from 0.3 seconds to 3 hours or 1 second to 10 hours—and provides dial-adjustable timing periods between 0.075 seconds and 10 hours. A single 339 model thus accommodates the needs of a wide range of applications, allowing the user to select easily and precisely—an appropriate range to permit optimum setting accuracy. The dial face automatically displays the selected range.

CYCLE PROGRESS INDICATION: The 339's LED annunciator provides a unique and effective method of cycle progress indication. Off before timing, the LED blinks at an ever-increasing rate as the cycle progresses; once every 3-1/2 seconds during the first 10% of the cycle, twice during the second 10%, and so on. At time-out, the LED stays on constantly, pulsing at a high rate. (In the 1 and 10-second ranges, the LED is off before timing, steady on during timing, and pulsing on after time-out.)

HIGH ACCURACY: The 339's timing circuit is not a simple RC circuit, but includes counting technology along with a stable oscillator to provide repeatable time delays.

MULTIPLE TIMING MODES: Every 339 can be used for either on-delay or interval timing operation. The timing mode is selectable by a switch on the 339 housing.

E48329

APPROVED

Plug-In Adjustable Time Delay Relay

OPERATION

Timing begins when the start switch is closed. This starts an oscillator which runs at a frequency determined by the time setting. A fixed number of counts from the oscillator determines the end of the time cycle. The time required to accomplish this depends on the oscillator frequency. During timing, a LED located on the dial face blinks. For the first ten percent of the cycle, the LED repeatedly blinks once followed by a pause, for the second 10%, it blinks twice and so on indicating the cycle progress. It flashes rapidly and continuously after time out.

ON-DELAY MODE: At time out, the built-in relay transfers its contacts. These contacts remain transferred until the start switch is opened or power is removed by some other means. The 339 then resets and is ready for another cycle.

INTERVAL MODE: When timing begins, the built-in relay transfers its contacts. The contacts remain transferred until time out. The timer will not start again until the start switch is opened or power is removed by some other means. The 339 then resets and is ready for another cycle.

MODEL NUMBER

MODEL NUMBER	339B			
RANGE				
Six dial-selected ranges (.3 or 3 SEC, MIN, HR)	359			
Six dial-selected ranges (1 or 10 SEC, MIN, HR)	200			
VOLTAGE & FREQUENCY				
120 VAC, 50/60 Hz		Q		
240 VAC, 50/60 Hz		R		
24 VAC, 50/60 Hz, 24 VDC		T		
12 VDC		E		
ARRANGEMENT				
ON-Delay, Interval Mode			2	
Special			0	
FEATURES				
Standard				X
Special				K

ACCESSORIES	
8-Pin surface/DIN rail socket	000-825-85-00
Hold down for above socket (2 required)	339-025-03-00
Plug-in socket kit (8-pin)	319-261-45-00

WIRING

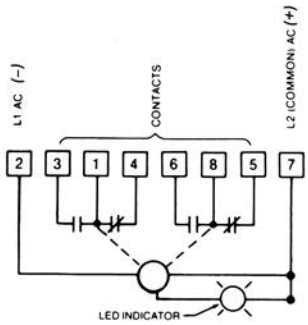

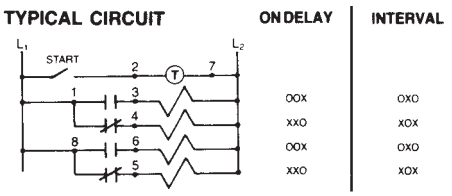

*For interval operation with a momentary start switch, jumper 2 and 3.

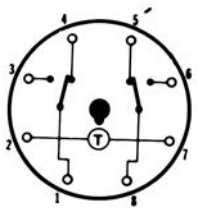

TERMINAL WIRING

SPECIFICATIONS

MODELS	Choice of two multi-range units. All models operate in on-delay or interval mode.	
RANGES	Choice of two models	
	Six dial-selected ranges:1.0 and 10 SEC, MIN, HR or 0.3 and 3 SEC, MIN, HR	
MINIMUM SETTING	3% of range, except 75 mSEC on 0.3 SEC and 1.0 SEC ranges.	
LOAD RELAY	TYPE	DPDT 10 AMPS resistive at 30 VDC or 250 VAC (or less) 1/8 HP @120 VAC
	LIFE	10 million operations with no load 100,000 operations with:10 AMPS at 30 VDC (or less) or 10 AMPS at 250 VAC (or less)
	CONTACT MATERIAL	Silver Nickel
TEMPERATURE RATING	0° to 140°F (-17° to 60°C)	
MOUNTING	Plug-in octal base; mounts in any position with retaining clips.	
	OPTIONS:	Surface mounting socket DIN rail mounting socket Panel-mounting adapter kit Plug-on socket Rear facing terminal socket.
POWER REQUIREMENTS	120 VAC	95 - 132 VAC,50/60Hz Inrush - .4A Running - .025
	240 VAC	190 - 264 VAC, 50/60 Hz Inrush - .2A Running - .013A
	24 VAC/DC	19.2 - 26.4 VAC/DC Inrush - .4A Running - .075A
	12 VDC	9.6 - 13.2 VDC Inrush - .25A Running - .10A
REPEAT ACCURACY	Varies as a function of line voltage and temperature but not of reset time	
	a	±0.5% at constant temperature and voltage. (or ±15 mSEC whichever is greater)
	b	± 1%* at constant voltage and full temperature range. (or ± 25 mSEC which ever is greater)
	c	± 1.5%* at constant temperature and full voltage range. (or ± 25 mSEC whichever is greater)
	d	± 2%* over full voltage and temperature range. (or ± 30 mSEC, which ever is greater)
	*Variations of line voltage must be within 95 and 132V; of temperature between -17° and 60°C (0° and 140°F)	
RECYCLE CHARACTERISTICS	The timer can be used as a pulse generator with L1 power wired though its NC contacts. The pulse will be 35 mSEC to 90 mSEC long.(40 mSEC typical pulse.)	
	a	0 to 20 mSEC power interruption; Guaranteed no reset.
	b	20 mSEC to 90 mSEC; it may reset.(40 mSEC typical reset).
	c	Over 90 mSEC guaranteed to reset. The TDR will reset properly and not start timing when subjected to an open start switch leakage of 1.5 mA or less. (Prox switch and Triac drive applications)
WEIGHT	2.5 oz. (70 g)	

DIMENSIONS (INCHES/MILLIMETERS)

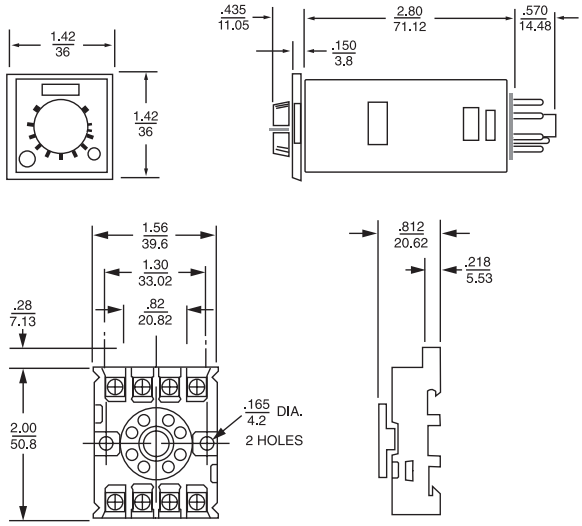

8 PIN OPTIONAL OCTAL SOCKET NO. 00008258500

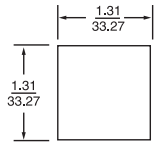

CUTOUT

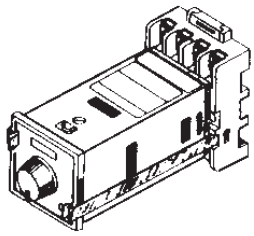

00008258500 SOCKET WITH 339-025-03-00 HOLD DOWNS

When supply voltage is applied, the OFF delay (T1) begins. Upon completion of the OFF delay, the load energizes and the ON delay (T2) begins. Upon completion of the ON delay, the load de-energizes and one cycle is complete. This ON/OFF cycling continues until the supply voltage is removed. The OFF delay always equals the ON delay.

E55826

Solid-State Flasher

DIMENSIONS (INCHES)

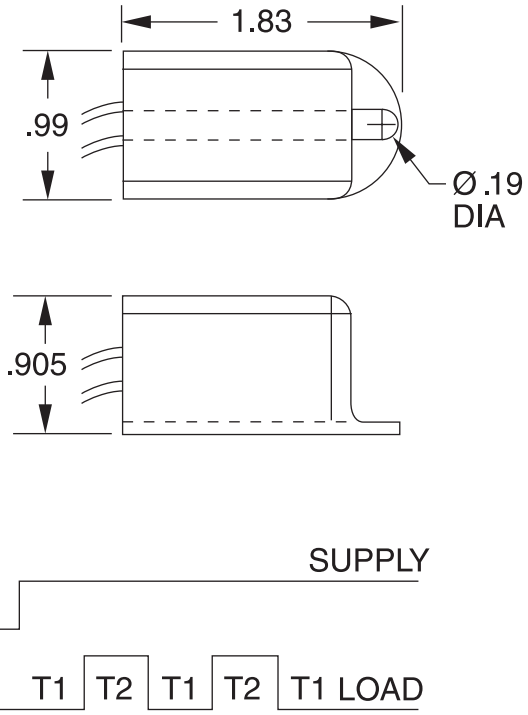

- Totally Solid-state
- 2-Wire Leads (Series Connection with Load)
- Totally Encapsulated Circuitry
- Molded Case with Built-In Mounting Feature
- High Inrush Capability
- Low Cost
- 1 Amp (Fullwave) and 3 Amp (halfwave) versions

SPECIFICATIONS

TIMING ACTION	Flasher, 50% Duty Cycle	
TIMING RANGE	Factory Fixed, (45-150) Flashes per minute ±20%	
OUTPUT RATING	1 A Resistive (Fullwave)	10 A Maximum (Inrush) 40 mA Minimum (Hold in Current) 2.5 Volt Drop @ 1 A
	3 A Resistive (Halfwave)	10 A Maximum (Inrush) 40mA Minimum (Hold in Current) 1.1 Volt Drop @ 3 Amp
SUPPLY VOLTAGE	120 VAC; ± 15%, 50/60 Hertz	
TERMINATIONS	(2) 6 inch wires, 18 AWG, 300 Volt	
TEMPERATURE RATING	Operate	-4° to 140°F (-20° to +60°C) Free Air
	Storage	-40° to 185°F (-40° to +85°C)
MOUNTING	No. 8 or No. 10 Screw	
ENCLOSURE	Polycarbonate Case, Totally Encapsulated for Environmental Protection	
WEIGHT	0.1 lbs.	

MODEL NUMBER

MODEL NUMBER	ETN	120		F	T	75
VOLTAGE 120 Volts		120				
TYPE OF VOLTAGE AC Voltage			A			
3 Amp Halfwave			H			
TYPE OF OPERATION Fixed Unit				F		
ENCLOSURE Enclosure Type					T	
FLASHING RATE 75 Flashes/minute (Standard) Contact factory for other flashing rates						75

c UL us
E55826

Interval DIP Switch TDR

SPECIFICATIONS

TIME DELAY RANGE	A	0.1 to 102.3 SEC in 0.1 SEC Increments
	B	1.0 to 1,023 SEC in 1.0 SEC Increments
	C	10 to 10,230 SEC in 10 SEC Increments
	D	0.1 to 102.3 MIN in 0.1 MIN Increments
	E	1.0 to 1,023 MIN in 1.0 MIN Increments
OUTPUT RATING	10 A @ 250 VAC or 24 VDC,resistive	
ACCURACY	Setting ±2% or ±50 mSEC; whichever is greater	
	Repeat ±0.1% or ±8.3 mSEC; whichever is greater	
RESET TIMES	Before Time Out	100 mSEC
	After Time Out	50 mSEC
SUPPLY VOLTAGE	12, 24, 48, 120 or 240 VAC, 50/60 Hz; or DC; ±10%	
FALSE TRANSFER	No	
REVERSE POLARITY	Yes	
POWER REQUIRED	3 VA, approximately	
DUTY CYCLE	Continuous	
TEMPERATURE RATING	Operate	32° to 131°F (0° to +55°C)
	Storage	-49° to 185°F (-45° to +85°C)
LIFE EXPECTANCY	Mechanical	10 million operations, minimum
	Electrical	100,000 operations @ rated load
INDICATORS	LED glows when relay is energized	
ISOLATION	1,500 volts, input/output	
WEIGHT	0.35 lbs.	

DIMENSIONS (INCHES)

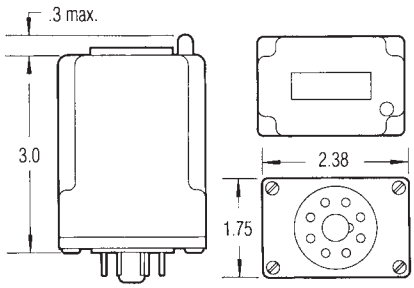

OPERATION

When supply voltage is applied to the input terminals, the relay energizes and the time delay begins. Upon completion of the delay period, the relay de-energizes. Reset occurs on power removal during or after the time delay relay.

DIP SWITCH OPERATION

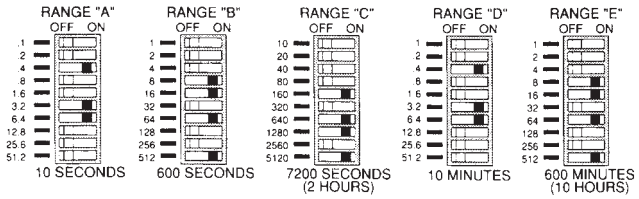

Digital selection of the time delay is accomplished by the use of ten (10) binary switches, each marked with a time increment. The time periods, of which there are five (5) ranges, represented by each switch in the ON position is added together to obtain the desired time delay. No more trial-by-error adjustments.

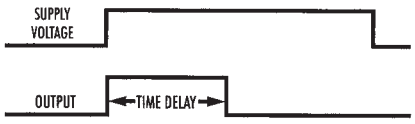

WIRING

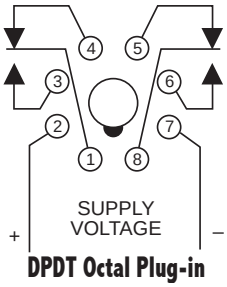

DPDT Octal Plug-in
RB-08/PF083A

MODEL NUMBER

MODEL NUMBER	TBB				A
CONTROL VOLTAGE					
12 VDC		12	D		
24 VAC/DC		24	A		
48 VDC		48	D		
120 VAC/DC		120	A		
240 VAC		240	A		
TIME DELAY RANGE					
0.1 to 102.3 SEC in 0.1 SEC Increments				A	
1.0 to 1,023 SEC in 1.0 SEC Increments				B	
10 to 10,230 SEC in 10 SEC Increments				C	
0.1 to 102.3 MIN in 0.1 MIN Increments				D	
1.0 to 1,023 MIN in 1.0 MIN Increments				E	
HOUSING					A

The time delay begins when supply voltage is applied to the input. Upon completion of the delay period, the relay energizes. Reset during or after the delay period is accomplished by removal of the supply voltage. The TBC Series will not false transfer if supply voltage is removed prior to completion of the delay period. A fast recycle time permits accurate, high speed, continuous operation.

DIP SWITCH OPERATION

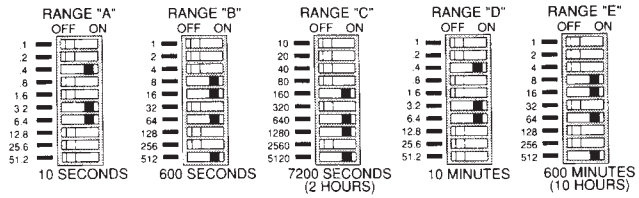

Digital selection of the time delay is accomplished by the use of ten (10) binary switches, each marked with a time increment. The time periods, of which there are five (5) ranges, represented by each switch in the ON position is added together to obtain the desired time delay. No more trial-by-error adjustments.

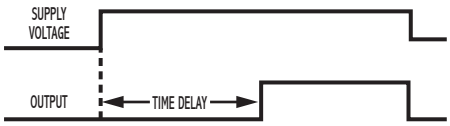

WIRING

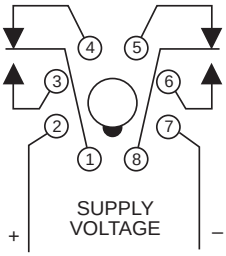

DPDT Octal Plug-in
RB-08/PF083A

MODEL NUMBER

MODEL NUMBER	TBC				A
CONTROL VOLTAGE					
12 VDC		12	D		
24 VAC/DC		24	A		
48 VDC		48	D		
120 VAC/DC		120	A		
240 VAC		240	A		
TIME DELAY RANGE					
0.1 to 102.3 SEC in 0.1 SEC Increments				A	
1.0 to 1,023 SEC in 1.0 SEC Increments				B	
10 to 10,230 SEC in 10 SEC Increments				C	
0.1 to 102.3 MIN in 0.1 MIN Increments				D	
1.0 to 1,023 MIN in 1.0 MIN Increments				E	
HOUSING					A

On-Delay DIP Switch TDR

SPECIFICATIONS

TIME DELAY RANGE	A	0.1 to 102.3 SEC in 0.1 SEC Increments
	B	1.0 to 1,023 SEC in 1.0 SEC Increments
	C	10 to 10,230 SEC in 10 SEC Increments
	D	0.1 to 102.3 MIN in 0.1 MIN Increments
	E	1.0 top 1,023 MIN in 1.0 MIN Increments
OUTPUT RATING	10 A @ 250 VAC or 24 VDC, resistive	
ACCURACY	Setting	±2% or ±50 mSEC; whichever is greater
	Repeat	±0.1% or ±8.3 mSEC; whichever is greater
RESET TIMES	Before Time Out	100 mSEC
	After Time Out	50 mSEC
SUPPLY VOLTAGE	12, 24, 48, 120 or 240 VAC, 50/60 Hz; or DC; ±10%	
FALSE TRANSFER	No	
REVERSE POLARITY PROTECTED	Yes	
POWER REQUIRED	3 VA, approximately	
DUTY CYCLE	Continuous	
TEMPERATURE RATING	Operate	32° to 131°F (0° to +55°C)
	Storage	-49° to 185°F (-45° to +85°C)
LIFE EXPECTANCY	Mechanical	10 million operations, minimum
	Electrical	100,000 operations @ rated load
INDICATORS	LED glows when relay is energized	
ISOLATION	1,500 volts, input/output	
WEIGHT	0.35 lbs.	

DIMENSIONS (INCHES)

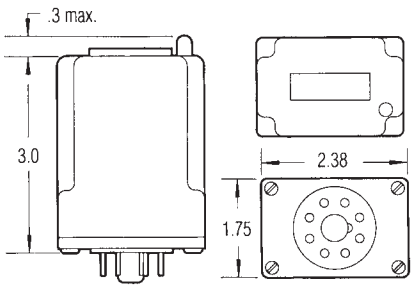

E55826

Off-Delay DIP Switch TDR

OPERATION

Supply voltage is continuously applied to the input. An external isolated switch between pins 5 and 6 controls the timer. When closed, the relay energizes. Opening the switch initiates the delay period. Upon completion of the delay period, the relay de-energizes. If the control switch recloses during the delay period, the relay remains energized and the timer resets to zero. NOTE: The TBD Series is available in an 8-pin SPDT and an 11-pin DPDT configuration.

DIP SWITCH OPERATION

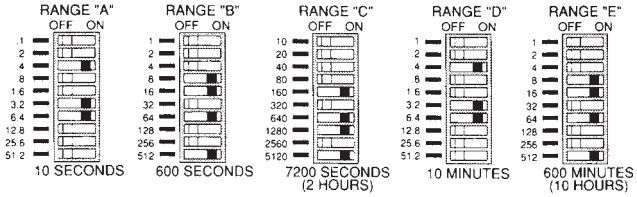

Digital selection of the time delay is accomplished by the use of ten (10) binary switches, each marked with a time increment. The time periods, of which there are five (5) ranges, represented by each switch in the ON position is added together to obtain the desired time delay. No more trial-by-error adjustments.

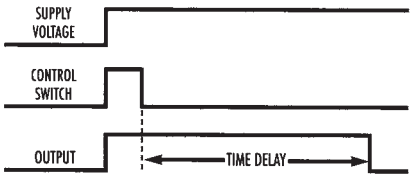

SPECIFICATIONS

TIME DELAY RANGE

A	0.1 to 102.3 SEC in 0.1 SEC Increments
B	1.0 to 1,023 SEC in 1.0 SEC Increments
C	10 to 10,230 SEC in 10 SEC Increments
D	0.1 to 102.3 MIN in 0.1 MIN Increments
E	1.0 to 1,023 MIN in 1.0 MIN Increments

OUTPUT RATING	SPDT	10 A @ 250 VAC or 24 VDC, resistive
	DPDT	5 A @ 240 VAC
ACCURACY	Setting	±2% or ±50 mSEC; whichever is greater
	Repeat	±0.1% or ±8.3 mSEC; whichever is greater
RESET TIMES	Before Time Out	100 mSEC
	After Time Out	50 mSEC
SUPPLY VOLTAGE	12, 24, 48, 120 or 240 VAC, 50/60 Hz; or DC; ±10%	
FALSE TRANSFER	No	
REVERSE POLARITY PROTECTED	Yes	
POWER REQUIRED	3 VA, approximately	
DUTY CYCLE	Continuous	
TEMPERATURE RATING	Operate	32° to 131°F (0° to +55°C)
	Storage	-49° to 185°F (-45° to +85°C)
LIFE EXPECTANCY	Mechanical	10 million operations, minimum
	Electrical	100,000 Operations @ rated load
INDICATORS	LED glows when relay is energized.	
ISOLATION	1,500 volts, input/output	
WEIGHT	0.4 lbs.	

DIMENSIONS

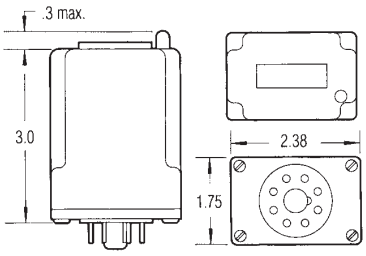

WIRING

STANDARD

RB-08/PF083A

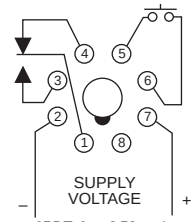

SPDT Octal Plug-in

OPTION

RB-011/PF0113A

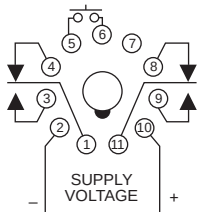

DPDT 11 Pin Plug-in

MODEL NUMBER

MODEL NUMBER	TBD				A	
CONTROL VOLTAGE						
12 Volts DC		12	D			
24 Volts AC/DC		24	A			
48 Volts DC		48	D			
120 Volts AC/DC		120	A			
240 Volts AC		240	A			
TIME DELAY RANGE						
0.1 to 102.3 SEC in 0.1 SEC Increments				A		
1.0 to 1,023 SEC in 1.0 SEC Increments				B		
10 to 10,230 SEC in 10 SEC Increments				C		
0.1 to 102.3 MIN in 0.1 MIN Increments				D		
1.0 to 1,023 MIN in 1.0 MIN Increments				E		
HOUSING					A	
OPTION						
DPDT, 5 Amps @120 VAC,11-Pin						D

OPERATION

Supply voltage is continuously applied to the input. An external control isolated switch between pins 5 and 6 initiates the time delay. When closed (momentary or maintained), the relay energizes and the delay period begins. Upon completion of the delay period, the relay de-energizes. NOTE: The TBE Series is available in an 8-pin SPDT and an 11-pin DPDT configuration.

DIP SWITCH OPERATION

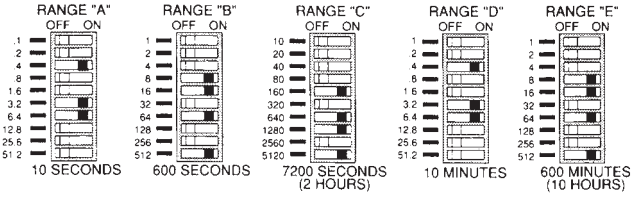

Digital selection of the time delay is accomplished by the use of ten (10) binary switches, each marked with a time increment. The time periods, of which there are five (5) ranges, represented by each switch in the ON position is added together to obtain the desired time delay.
No more trial-by-error adjustments.

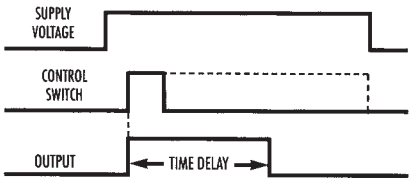

DIMENSIONS

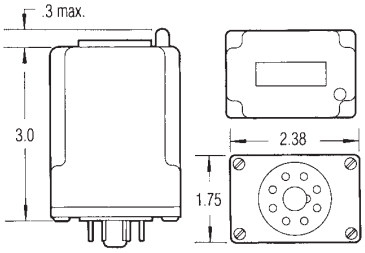

WIRING

STANDARD

RB-08/PF083A

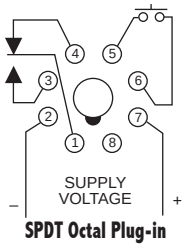

SPDT Octal Plug-in

OPTION

RB-011/PF0113A

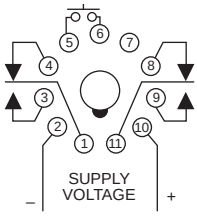

DPDT 11 Pin Plug-in

MODEL NUMBER

MODEL NUMBER	TBE				A	
CONTROL VOLTAGE						
12 Volts DC		12	D			
24 Volts AC/DC		24	A			
48 Volts DC		48	D			
120 Volts AC/DC		120	A			
240 Volts AC		240	A			
TIME DELAY RANGE						
0.1 to 102.3 SEC in 0.1 SEC Increments				A		
1.0 to 1,023 SEC in 1.0 SEC Increments				B		
10 to 10,230 SEC in 10 SEC Increments				C		
0.1 to 102.3 MIN in 0.1 MIN Increments				D		
1.0 to 1,023 MIN in 1.0 MIN Increments				E		
HOUSING					A	
OPTION						
DPDT. 5 Amps @ 120 VAC, 11-Pin						D

E55826

Single Shot DIP Switch TDR

SPECIFICATIONS

TIME DELAY RANGE		
	A	0.1 to 102.3 SEC in 0.1 SEC Increments
	B	1.0 to 1,023 SEC in 1.0 SEC Increments
	C	10 to 10,230 SEC in 10 SEC Increments
	D	0.1 to 102.3 MIN in 0.1 MIN Increments
	E	1.0 to 1,023 MIN in 1.0 MIN Increments
OUTPUT RATING	SPDT	10 A @ 250 VAC or 24 VDC, resistive
	DPDT	5 A @ 240 VAC
ACCURACY	Setting	±2% or ±50 mSEC; whichever is greater
	Repeat	±0.1% or ±8.3 mSEC; whichever is greater
RESET TIMES	Before Time Out	100 mSEC
	After Time Out	50 mSEC
SUPPLY VOLTAGE	12, 24, 48, 120 or 240 VAC, 50/60 Hz; or DC; ±10%	
FALSE TRANSFER	No	
REVERSE POLARITY PROTECTED	Yes	
POWER REQUIRED	3 VA, approximately	
DUTY CYCLE	Continuous	
TEMPERATURE RATING	Operate	32° to 131°F (0° to +55°C)
	Storage	-49° to 185°F (-45° to +85°C)
LIFE EXPECTANCY	Mechanical	10 million operations, minimum
	Electrical	100,000 Operations @ rated load
INDICATORS	LED glows when relay is energized.	
ISOLATION	1,500 volts, input/output	
WEIGHT	0.4 lbs.	

E55826

Repeat Cycle-OFF Time
First DIP Switch TDR

SPECIFICATIONS

TIME DELAY RANGE		
	A	0.1 to 102.3 SEC in 0.1 SEC Increments
	B	1.0 to 1,023 SEC in 1.0 SEC Increments
	C	10 to 10,230 SEC in 10 SEC Increments
	D	0.1 to 102.3 MIN in 0.1 MIN Increments
	E	1.0 to 1,023 MIN in 1.0 MIN Increments
OUTPUT RATING	10 A @ 250 VAC or 24 VDC, resistive	
ACCURACY	Setting ±2% or ±50 mSEC; whichever is greater	
	Repeat ±0.1% or ±8.3 mSEC; whichever is greater	
RESET TIMES	Before Time Out	100 mSEC
	After Time Out	50 mSEC
SUPPLY VOLTAGE	12, 24, 48, 120 or 240 VAC, 50/60 Hz; or DC; ±10%	
FALSE TRANSFER	No	
REVERSE POLARITY PROTECTED	Yes	
POWER REQUIRED	3 VA, approximately	
DUTY CYCLE	Continuous	
TEMPERATURE RATING	Operate	32° to 131°F (0° to +55°C)
	Storage	-49° to 185°F (-45° to +85°C)
LIFE EXPECTANCY	Mechanical	10 million operations, minimum
	Electrical	100,000 Operations @ rated load
INDICATORS	LED glows when relay is energized.	
ISOLATION	1,500 volts, input/output	
WEIGHT	0.4 lbs.	

OPERATION

When supply voltage is applied to the input, the OFF time (T1) begins. Upon completion of the OFF time, the relay energizes and the ON time (T2) begins. Upon completion of the ON time, the relay de-energizes and one cycle is complete. This OFF/ON cycling continues until supply voltage is removed from the input. The OFF/ON time periods are independently selectable within the same range.

DIP SWITCH OPERATION

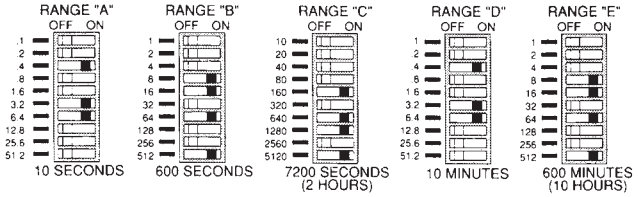

Digital selection of the time delay is accomplished by the use of ten (10) binary switches, each marked with a time increment. The time periods, of which there are five (5) ranges, represented by each switch in the ON position is added together to obtain the desired time delay. No more trial-by-error adjustments.

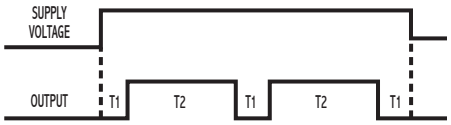

WIRING

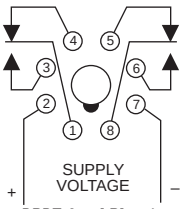

DPDT Octal Plug-in
RB-08/PF083A

DIMENSIONS

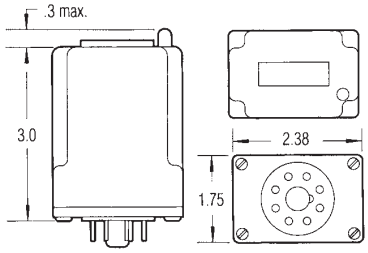

MODEL NUMBER

MODEL NUMBER	TBF				A
CONTROL VOLTAGE					
12 VDC		12	D		
24 VAC/DC		24	A		
48 VDC		48	D		
120 VAC/DC		120	A		
240 VAC		240	A		
TIME DELAY RANGE					
0.1 to 102.3 SEC in 0.1 SEC Increments				A	
1.0 to 1,023 SEC in 1.0 SEC Increments				B	
10 to 10,230 SEC in 10 SEC Increments				C	
0.1 to 102.3 MIN in 0.1 MIN Increments				D	
1.0 to 1,023 MIN in 1.0 MIN Increments				E	
HOUSING					A

OPERATION

When supply voltage is applied to the input, the relay energizes and ON time (T1) begins. Upon completion of the ON time, the relay de-energizes and the OFF time (T2) begins. Upon completion of the OFF time, the relay energizes and one cycle is complete. This ON/OFF cycling continues until supply voltage is removed from the input. The ON/OFF delay periods are independently selectable within the same range.

DIP SWITCH OPERATION

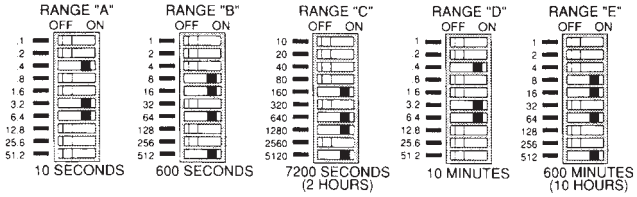

Digital selection of the time delay is accomplished by the use of ten (10) binary switches, each marked with a time increment. The time periods,of which there are five (5) ranges, represented by each switch in the ON position is added together to obtain the desired time delay. No more trial-by-error adjustments.

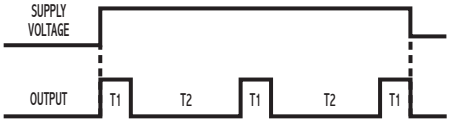

WIRING

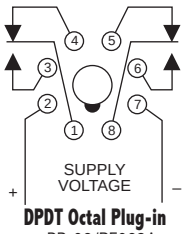

DPDT Octal Plug-in
RB-08/PF083A

DIMENSIONS

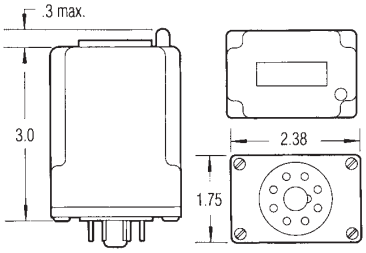

MODEL NUMBER

MODEL NUMBER	TBG				A
CONTROL VOLTAGE					
12 Volts DC		12	D		
24 Volts AC/DC		24	A		
48 Volts DC		48	D		
120 Volts AC/DC		120	A		
240 Volts AC		240	A		
TIME DELAY RANGE					
0.1 to 102.3 SEC in 0.1 SEC Increments				A	
1.0 to 1,023 SEC in 1.0 SEC Increments				B	
10 to 10,230 SEC in 10 SEC Increments				C	
0.1 to 102.3 MIN in 0.1 MIN Increments				D	
1.0 to 1,023 MIN in 1.0 MIN Increments				E	
HOUSING					A

Repeat Cycle-ON Time First DIP Switch TDR

SPECIFICATIONS

TIME DELAY RANGE		
	A	0.1 to 102.3 SEC in 0.1 SEC Increments
	B	1.0 to 1,023 SEC in 1.0 SEC Increments
	C	10 to 10,230 SEC in 10 SEC Increments
	D	0.1 to 102.3 MIN in 0.1 MIN Increments
	E	1.0 to 1,023 MIN in 1.0 MIN Increments
OUTPUT RATING	10 A @ 250 VAC or 24 VDC, resistive	
ACCURACY	Setting ±2% or ±50 mSEC; whichever is greater	
	Repeat ±0.1% or ±8.3 mSEC; whichever is greater	
RESET TIMES	Before Time Out	100 mSEC
	After Time Out	50 mSEC
SUPPLY VOLTAGE	12, 24, 48, 120 or 240 VAC, 50/60 Hz; or DC; ±10%	
FALSE TRANSFER	No	
REVERSE POLARITY PROTECTED	Yes	
POWER REQUIRED	3 VA, approximately	
DUTY CYCLE	Continuous	
TEMPERATURE RATING	Operate	32° to 131°F (0° to +55°C)
	Storage	-49° to 185°F (-45° to +85°C)
LIFE EXPECTANCY	Mechanical	10 million operations, minimum
	Electrical	100,000 Operations @ rated load
INDICATORS	LED glows when relay is energized.	
ISOLATION	1,500 volts, input/output	
WEIGHT	0.4 lbs.	

E55826

Flasher DIP Switch TDR

SPECIFICATIONS

TIME DELAY RANGE

A	0.1 to 102.3 SEC in 0.1 SEC Increments
B	1.0 to 1,023 SEC in 1.0 SEC Increments
C	10 to 10,230 SEC in 10 SEC Increments
D	0.1 to 102.3 MIN in 0.1 MIN Increments
E	1.0 to 1,023 MIN in 1.0 MIN Increments

OUTPUT RATING	10 A @ 250 VAC or 24 VDC, resistive	
ACCURACY	Setting ±2% or ±50 mSEC; whichever is greater	
	Repeat ±0.1% or ±8.3 mSEC; whichever is greater	
RESET TIMES	Before Time Out	100 mSEC
	After Time Out	50 mSEC
SUPPLY VOLTAGE	12, 24, 48, 120 or 240 VAC, 50/60 Hz; or DC; ±10%	
FALSE TRANSFER	No	
REVERSE POLARITY PROTECTED	Yes	
POWER REQUIRED	3 VA, approximately	
DUTY CYCLE	Continuous	
TEMPERATURE RATING	Operate	32° to 131°F (0° to +55°C)
	Storage	-49° to 185°F (-45° to +85°C)
LIFE EXPECTANCY	Mechanical	10 million operations, minimum
	Electrical	100,000 Operations @ rated load
INDICATORS	LED glows when relay is energized.	
ISOLATION	1,500 volts, input/output	
WEIGHT	0.35 lbs.	

OPERATION

When supply voltage is applied to the input, the OFF time (T1) begins. Upon completion of the OFF time, the relay energizes and the ON time (T2) begins. Upon completion of the ON time, the relay de-energizes and one cycle is complete. This OFF/ON cycling continues until supply voltage is removed from the input. The OFF time always equals the ON time.

DIP SWITCH OPERATION

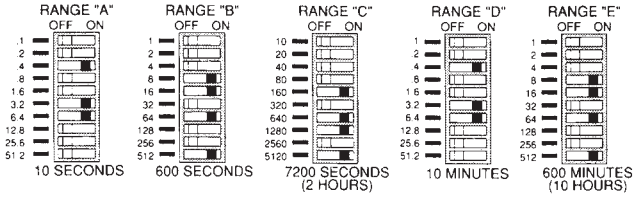

Digital selection of the time delay is accomplished by the use of ten (10) binary switches, each marked with a time increment. The time periods, of which there are five (5) ranges, represented by each switch in the ON position is added together to obtain the desired time delay. No more trial-by-error adjustments.

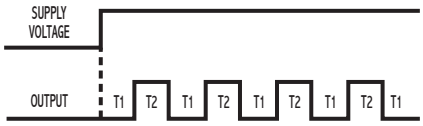

WIRING

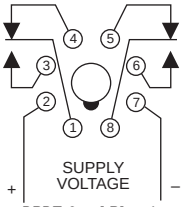

DPDT Octal Plug-in
RB-08/PF083A

DIMENSIONS

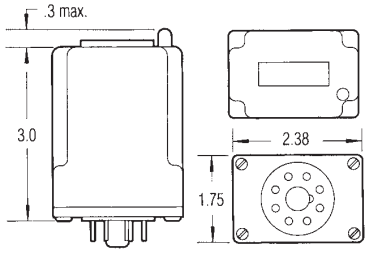

MODEL NUMBER

MODEL NUMBER	TBL				A
CONTROL VOLTAGE					
12 VDC		12	D		
24 VAC/DC		24	A		
48 VDC		48	D		
120 VAC/DC		120	A		
240 VAC		240	A		
TIME DELAY RANGE					
0.1 to 102.3 SEC in 0.1 SEC Increments				A	
1.0 to 1,023 SEC in 1.0 SEC Increments				B	
10 to 10,230 SEC in 10 SEC Increments				C	
0.1 to 102.3 MIN in 0.1 MIN Increments				D	
1.0 to 1,023 MIN in 1.0 MIN Increments				E	
HOUSING					A

OPERATION

The TBU Series offers the accuracy of DIP SWITCH delay ranges "A" through "E" as well as the user programmable model, DIP SWITCH delay range "P," with 4 different ranges obtainable by either leaving 2 designated terminals unconnected or by connecting them to the appropriate terminals as shown on the next page. The 6 most common modes of operation are easily selected by the use of one or more jumpers applied externally between designated base pins as outlined on the next page. These features, coupled with 6 most popular supply voltages, make this timer one of the most versatile and cost effective Time Delay Relays available today. The CMOS digital circuitry provides high accuracy, repeatability and fast reset times.

DIP SWITCH OPERATION

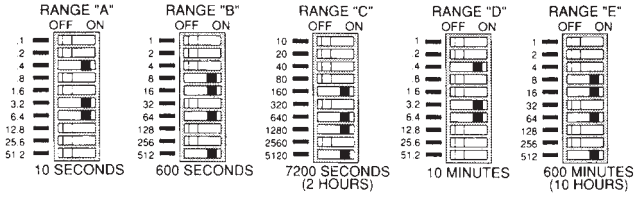

Digital selection of the time delay is accomplished by the use of ten (10) binary switches,each marked with a time increment. The time periods, of which there are five (5) ranges, represented by each switch in the ON position is added together to obtain the desired time delay. No more trial-by-error adjustments.

WIRING

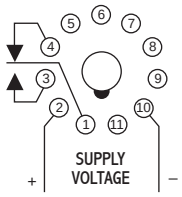

SPDT 11 Pin Plug-in
RB-11/PF113A

DIMENSIONS

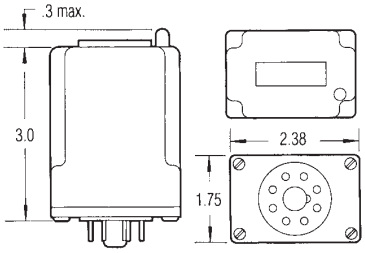

MODEL NUMBER

MODEL NUMBER	TBU				A
CONTROL VOLTAGE					
12 Volts DC		12	D		
24 Volts AC/DC		24	A		
48 Volts DC		48	D		
120 Volts AC/DC		120	A		
240 Volts AC		240	A		
TIME DELAY RANGE					
0.1 to 102.3 SEC in 0.1 SEC Increments				A	
1.0 to 1,023 SEC in 1.0 SEC Increments				B	
10 to 10,230 SEC in 10 SEC Increments				C	
0.1 to 102.3 MIN in 0.1 MIN Increments				D	
1.0 to 1,023 MIN in 1.0 MIN Increments				E	
Four (4) Programmable Ranges (TBU only)				P	
HOUSING					A

E55826

Programmable Multi-Mode DIP switch TDR

SPECIFICATIONS

TIME DELAY RANGE		
	A	0.1 to 102.3 SEC in 0.1 SEC Increments
	B	1.0 to 1,023 SEC in 1.0 SEC Increments
	C	10 to 10,230 SEC in 10 SEC Increments
	D	0.1 to 102.3 MIN in 0.1 MIN Increments
	E	1.0 to 1,023 MIN in 1.0 MIN Increments
OUTPUT RATING	10 A @ 250 VAC or 24 VDC, resistive	
ACCURACY	Setting ±2% or ±50 mSEC; whichever is greater	
	Repeat ±0.1% or ±8.3 mSEC; whichever is greater	
RESET TIMES	Before Time Out	100 mSEC
	After Time Out	50 mSEC
SUPPLY VOLTAGE	12, 24, 48, 120 or 240 VAC, 50/60 Hz; or DC; ±10%	
FALSE TRANSFER	No	
REVERSE POLARITY PROTECTED	Yes	
POWER REQUIRED	3 VA, approximately	
DUTY CYCLE	Continuous	
TEMPERATURE RATING	Operate	32° to 131°F (0° to +55°C)
	Storage	-49° to 185°F (-45° to +85°C)
LIFE EXPECTANCY	Mechanical	10 million operations, minimum
	Electrical	100,000 Operations @ rated load
INDICATORS	LED glows when relay is energized.	
ISOLATION	1,500 volts, input/output	
WEIGHT	0.35 lbs.	

TIME DELAY RANGE "P" SELECTION

CAUTION: DO NOT PROGRAM WITH POWER ON! WIRE FOR ONE TIMING RANGE ONLY!

4 different ranges can be obtained by either leaving 2 designated terminals unconnected or by connecting them to the appropriate terminals shown below. Because the Time Delay programming is the same regardless of the mode of operation only the wiring connections affecting the Time Delay are shown here.

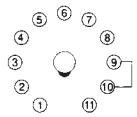

Jumper 9 to 10.
0.1 to 102.3 seconds
in 0.1 SEC increments

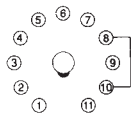

Jumper 8 to 10.
0.4 to 409.2 seconds
in 0.4 SEC increments

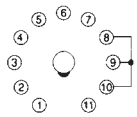

Jumper 8 and 9 to 10.
0.05 to 54.6 minutes
in .05 MIN increments

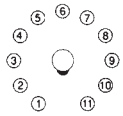

No Connections
to 8, 9 or 10
0.42 to 436.5 minutes
in 0.42 MIN increments

MODE OF OPERATION SELECTION – WIRE FOR ONE MODE ONLY!

INTERVAL: When supply voltage is applied to the input terminals, the relay energizes and the time delay begins. Upon completion of the delay period, the relay de-energizes. Reset during or after the delay period is accomplished by removal of the supply voltage.

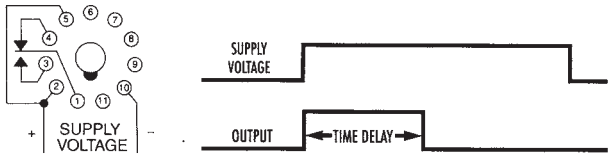

ON-DELAY: The time delay begins when supply voltage is applied to the input. Upon completion of the delay period, the relay energizes. Reset during or after the delay period is accomplished by removal of the supply voltage. The timer will not false transfer if supply voltage is removed prior to completion of the delay period.

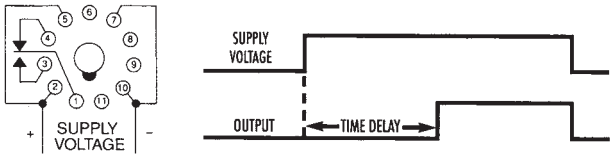

OFF-DELAY: Supply voltage is continuously applied to the input. An external isolated switch controls the timer. When closed, the relay energizes. Opening the switch initiates the delay period. Upon completion of the delay period, the relay de-energizes. If the control switch recloses during the delay period, the relay remains energized and the timer resets to zero.

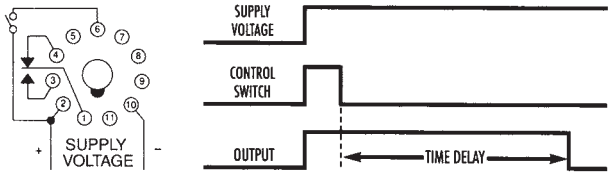

SINGLE-SHOT: Supply voltage is continuously applied to the input. An external isolated switch initiates the time delay. When closed (momentary or maintained), the relay energizes and the delay period begins. Upon completion of the delay period, the relay de-energizes.

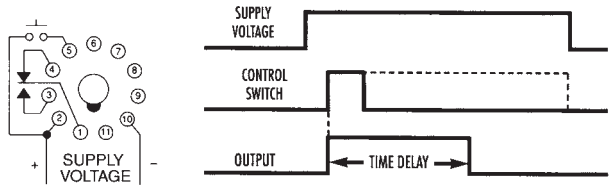

FLASHER—OFF TIME FIRST: When supply voltage is applied to the input, the OFF time (T1) begins. Upon completion of the OFF time, the relay energizes and the ON time (T2) begins. Upon completion of the ON time, the relay de-energizes and one cycle is complete. This OFF/ON cycling continues until supply voltage is removed from the input. The OFF time always equals the ON time.

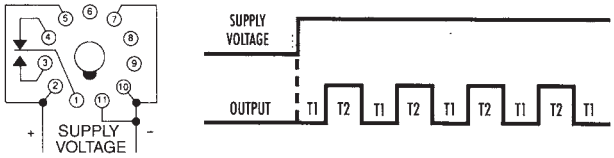

FLASHER—ON TIME FIRST: When supply voltage is applied to the input, the relay energizes and ON time (T1) begins. Upon completion of the ON time, the relay de-energizes and the OFF time (T2) begins. Upon completion of the OFF time, the relay energizes and one cycle is complete. This ON/OFF cycling continues until supply voltage is removed from the input. The ON time always equals the of time.

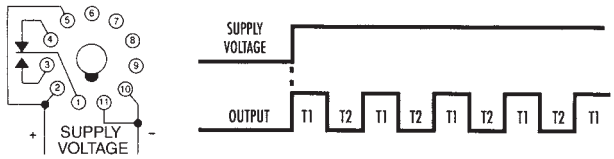

OPERATION

When voltage is applied to the input terminals, the relay energizes and the time delay begins. Upon completion of the delay period, the relay de-energizes. Reset during or after the delay period is accomplished by removal of the input voltage.

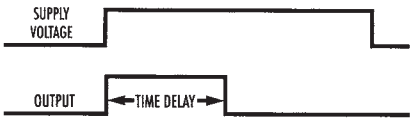

WIRING

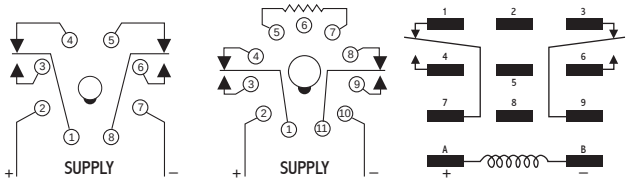

DPDT Octal Plug-in
RB-08/PF083A

DPDT 11 Pin Plug-in
External Resistor Adjustable
RB-11/PF113A

DPDT Blade Plug-in
70-463-1

DIMENSIONS (INCHES)

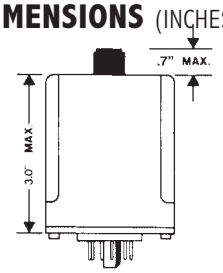

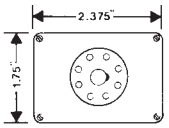

Octal and 11 Pin Plug-in

MODEL NUMBER

MODEL NUMBER	T		*B		A			
SERIES								
Relay Output		D						
Relay Output with CSA		U*						
SUPPLY VOLTAGE								
24 VAC or DC				24				
110/120 VAC or DC				120				
TYPE OF OPERATION								
Knob Adjustable						K		
Lock Nut Adjustable						L		
Fixed						F		
External Resistor Adjustable						R**		
ENCLOSURE STYLE								
8 or 11-pin Round Plug-in							A	
Blade Plug-in							B	
Non UL 12-pin Plug-in							C	

DELAY PERIOD
See page 77 for standard ranges available

Example: TUB-120-AKA-900—Interval on operate, 120 Volts AC or DC, knob adjustable from 9 to 900 seconds, 8-pin octal plug-in, UL recognized and CSA approved.

Notes:* The TUB series is offered in 120 Volts, style A enclosure only with optional types of operation "K", "L", or "F" CSA certified, File # LR40123**

TDB models using the "R" option are not UL Recognized. The "R"option is not offered in the TUB series or the style B enclosure. TDB models using "F", "K", or "L" options and in the 8-pin octal plug is only available in 24-volts.

* CSA

c UL us
E55826

Interval Relay Output

SPECIFICATIONS

TIMING RANGES
Virtually unlimited. See page 77 for standard ranges available.

OUTPUT RATING	DPDT, 10 A @ 250 VAC or 24 VDC, resistive; 211 VA @120 VAC,inductive	
TIMING TOLERANCES	Minimum Setting	+0–20%
	Maximum Setting	±10%;
REPEATABILITY	1% maximum; no first cycle effect	
RESET TIMES	Before Time Out	100 mSEC
	After Time Out	50 mSEC
RECYCLE TIME	40 mSEC	
SUPPLY VOLTAGE	24 or 120 VAC or VDC, 50/60 Hz; ±10% (TUB Series available in 120 Volts only)	
FALSE TRANSFER	No	
REVERSE POLARITY PROTECTED	Yes	
POWER CONSUMPTION	3 watts (approximately)	
DUTY CYCLE	Continuous	
TEMPERATURE RATING	Operate	32° to 131°F (0° to +55°C)
	Storage	-49° to 185°F (-45° to +85°C)
LIFE EXPECTANCY	Mechanical	10 million operations (minimum)
	Electrical	100,000 operations @ rated load
WEIGHT	5 oz.	

*

C US
E55826

On-Delay Relay Output

OPERATION

The time delay begins when power is applied to the input. Upon completion of the delay period, the relay energizes. Reset during or after the delay period is accomplished by removal of the input voltage. The TDC/TUC will not false transfer if voltage is removed prior to completion of the delay period. A fast recycle time permits accurate,high speed, continuous operation.

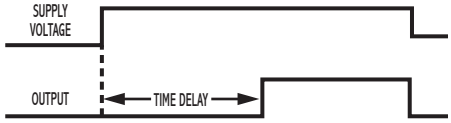

WIRING

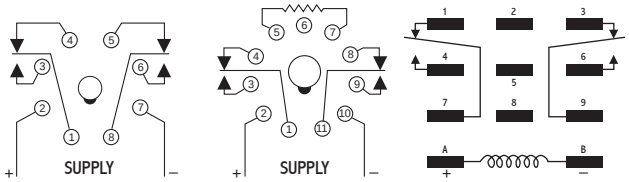

DPDT Octal Plug-in	DPDT 11 Pin Plug-in External Resistor Adjustable	DPDT Blade Plug-in
RB-08/PF083A	RB-11/PF113A	70-463-1

DIMENSIONS (INCHES)

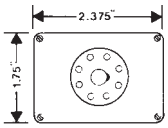

Octal and 11 Pin Plug-in

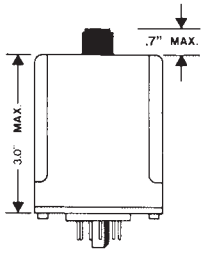

SPECIFICATIONS

TIMING RANGES
Virtually unlimited. See page 77 for standard ranges available.

OUTPUT RATING	DPDT, 10 A @ 250 VAC or 24 VDC, resistive; 211 VA @ 120 VAC, inductive, 25VA @ 24VAC inductive	
TIMING TOLERANCES	Minimum Setting	+0 – 20%
	Maximum Setting	±10%;
REPEATABILITY	1% maximum; no first cycle effect	
RESET TIMES	Before Time Out	100 mSEC
	After Time Out	50 mSEC
RECYCLE TIME	40 mSEC	
SUPPLY VOLTAGE	24 or 120 VAC or VDC, 50/60 Hz; ±10% (TUC Series available in 120 Volts only)	
FALSE TRANSFER	No	
REVERSE POLARITY PROTECTED	Yes	
POWER CONSUMPTION	3 watts (approximately)	
DUTY CYCLE	Continuous	
TEMPERATURE RATING	Operate	32° to 131°F (0° to +55°C)
	Storage	-49° to 185°F (-45° to +85°C)
LIFE EXPECTANCY	Mechanical	10 million operations (minimum)
	Electrical	100,000 operations @ rated load
WEIGHT	5 oz.	

MODEL NUMBER

MODEL NUMBER	T		C		A			
SERIES								
Relay Output		D						
Relay Output with CSA		U*						
SUPPLY VOLTAGE								
24 VAC or DC				24				
110/120 VAC or DC				120				
TYPE OF OPERATION								
Knob Adjustable						K		
Lock Nut Adjustable						L		
Fixed						F		
External Resistor Adjustable						R**		
ENCLOSURE STYLE								
8 or 11-pin Round Plug-in							A	
Blade Plug-in							B	
Non-UL 12-pin DIP Plug-in							C	

DELAY PERIOD
See page 77 for standard ranges available

Example: TUC-120-AKA-900—Interval on operate, 120 Volts AC or DC, knob adjustable from 9 to 900 seconds, 8-pin octal plug-in, UL recognized and CSA approved.

Notes:* The TUC series is offered in 120 Volts, style A enclosure only with optional types of operation "K", "L", or "F" CSA certified, File #LR40123**

TDC models using the "R" option are not UL Recognized. The "R" option is not offered in the TUC series or the style B enclosure. TDC models using "F", "K", or "L" options and in the 8-pin octal plug are only available in 24-volts.

OPERATION

Voltage is continuously applied to the input. An external isolated switch controls the timer. When closed, the relay energizes. Opening the switch initiates the delay period. Upon completion of the delay period, the relay de-energizes. If the control switch recloses during the delay period, the relay remains energized and the timer resets to zero.

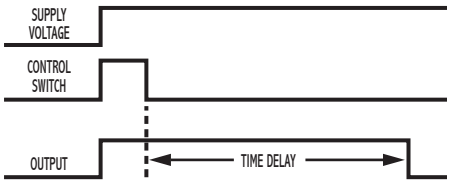

*

E55826

Off-Delay Relay Output

WIRING

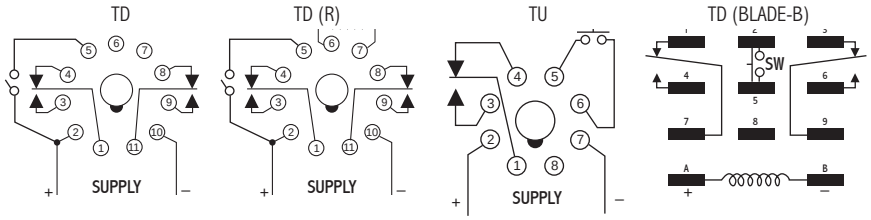

DPDT 11 Pin Plug-in RB-11/PF113A | **DPDT 11 Pin Plug-in** External Resistor Adjustable | **SPDT Octal Plug-in** RB-08/PF083A | **DPDT Blade Plug-in** 70-463-1

DIMENSIONS (INCHES)

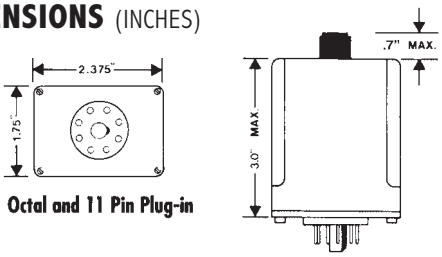

Octal and 11 Pin Plug-in

MODEL NUMBER

MODEL NUMBER	T		D		A			
SERIES								
Relay Output		D						
Relay Output with CSA		U*						
SUPPLY VOLTAGE								
24 VAC or DC				24				
110/120 VAC or DC				120				
TYPE OF OPERATION								
Knob Adjustable						K		
Lock Nut Adjustable						L		
Fixed						F		
External Resistor Adjustable						R**		
ENCLOSURE STYLE								
8 or 11-pin Round Plug-in							A	
Blade Plug-in							B	
Non-UL 12-pin DIP Plug-in							C	

DELAY PERIOD

See page 77 for standard ranges available

Example: TDD-120-AKA-600—Delay on Release, 120 Volts AC or DC, knob adjustable from 6 to 600 seconds, 11-pin octal plug-in, UL Recognized.

SPECIFICATIONS

TIMING RANGES

Virtually unlimited. See page 77 for standard ranges available.

OUTPUT RATING	DPDT, 10 A @ 250 VAC or 24 VDC, resistive; 211 VA @ 120 VAC, inductive	
TIMING TOLERANCES	Minimum Setting	+0 – 20%
	Maximum Setting	±10%;
REPEATABILITY	1% maximum; no first cycle effect	
RESET TIMES	Before Time Out	100 mSEC
	After Time Out	50 mSEC
RECYCLE TIME	40 mSEC	
SUPPLY VOLTAGE	24 or 120 VAC or VDC, 50/60 Hz; ±10% (TUD Series available in 120 Volts only)	
FALSE TRANSFER	No	
REVERSE POLARITY PROTECTED	Yes	
POWER CONSUMPTION	3 watts (approximately)	
DUTY CYCLE	Continuous	
TEMPERATURE RATING	Operate	32° to 131°F (0° to +55°C)
	Storage	-49° to 185°F (-45° to +85°C)
LIFE EXPECTANCY	Mechanical	10 million operations (minimum)
	Electrical	100,000 operations @ rated load
WEIGHT	6 oz.	

Notes:* The TUD series is offered in 120 Volts, octal plug-in style A enclosure only with optional types of operation "K", "L", or "F" CSA certified: File #LR40123** and UL Recognized.

TDD's using the "R" option are not UL Recognized. The "R" option is NOT offered in the TUD series or the style B enclosure.

*

E55826

Single-Shot Relay Output

OPERATION

Voltage is continuously applied to the input. An external isolated switch controls the timer. When closed (momentary or maintained), the relay energizes and the delay period begins. Upon completion of the delay period, the relay de-energizes.

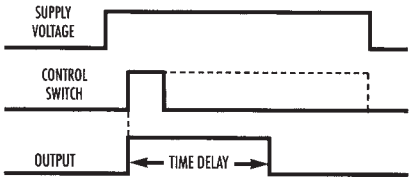

WIRING

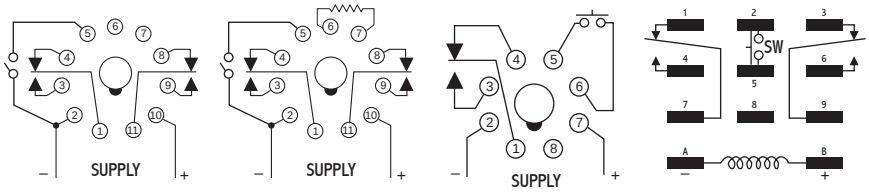

DPDT 11 Pin Plug-in RB-11/PF113A | **DPDT 11 Pin Plug-in** External Resistor Adjustable | **SPDT Octal Plug-in** RB-08/PF083A | **DPDT Blade Plug-in** 70-463-1

SPECIFICATIONS

TIMING RANGES
Virtually unlimited. See page 77 for standard ranges available.

OUTPUT RATING	DPDT, 10 A @ 250 VAC or 24 VDC, resistive; 211 VA @ 120 VAC, inductive	
TIMING TOLERANCES	Minimum Setting	+0 – 20%
	Maximum Setting	±10%;
REPEATABILITY	1% maximum; no first cycle effect	
RESET TIMES	Before Time Out	100 mSEC
	After Time Out	50 mSEC
RECYCLE TIME	40 mSEC	
SUPPLY VOLTAGE	24 or 120 VAC or VDC, 50/60 Hz; ±10% (TUE Series available in 120 Volts only)	
FALSE TRANSFER	No	
REVERSE POLARITY PROTECTED	Yes	
POWER CONSUMPTION	3 watts (approximately)	
DUTY CYCLE	Continuous	
TEMPERATURE RATING	Operate	32° to 131°F (0° to +55°C)
	Storage	-49° to 185°F (-45° to +85°C)
LIFE EXPECTANCY	Mechanical	10 million operations (minimum)
	Electrical	100,000 operations @ rated load
WEIGHT	4.5 oz.	

For UL/CSA Approved version specify TUE Series of On-Delay Relay Output Timers.

DIMENSIONS (INCHES)

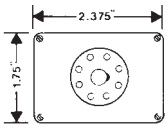

Octal and 11 Pin Plug-in

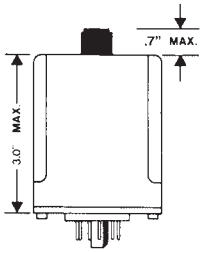

MODEL NUMBER

MODEL NUMBER	T		E		A			
SERIES								
Relay Output		D						
Relay Output with CSA		U*						
SUPPLY VOLTAGE								
24 VAC or DC				24				
110/120 VAC or DC				120				
TYPE OF OPERATION								
Knob Adjustable						K		
Lock Nut Adjustable						L		
Fixed						F		
External Resistor Adjustable						R**		
ENCLOSURE STYLE								
8-pin or 11-pin Round Plug-in								A
Blade Plug-in							B	
DELAY PERIOD								
See page 77 for standard ranges available								

Example: TUE-120-AKA-900—Single Shot, 120 Volts AC or DC, knob adjustable from 9 to 900 seconds, 8-pin octal plug-in. UL recognized and CSA approved.

Notes:* The TUE series is offered in 120 Volts, octal plug-in (figure 23) style A enclosure only with optional types of operation "K", "L",or "F" CSA certified: File #LR40123

**TDE's using the "R" option are not UL Recognized. The "R" option is NOT offered in the TUE series or the style B enclosure.

OPERATION

Application of voltage to the input of the timer initiates the OFF time. Upon completion of the OFF time, the relay energizes and the ON time begins. Upon completion of the ON time, the relay de-energizes and one cycle is completed. This OFF/ON cycling continues until voltage is removed from the input. The OFF/ON time periods are independently adjustable.

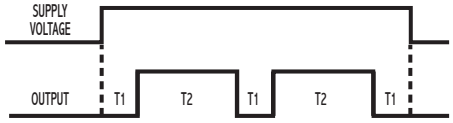

Repeat Cycle-OFF Time
First Relay Output

WIRING

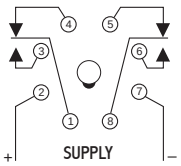

DPDT Octal Plug-in
RB-08/PF083A

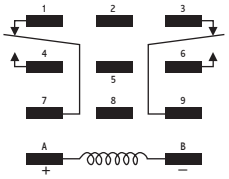

DPDT Blade Plug-in
70-463-1

DIMENSIONS (INCHES)

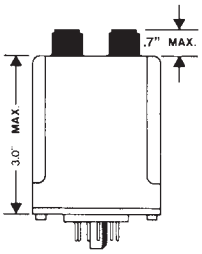

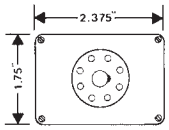

Octal Pin Plug-in

MODEL NUMBER

MODEL NUMBER	TDF		A			
SUPPLY VOLTAGE						
24 VAC or DC		24				
110/120 VAC or DC		120				
TYPE OF OPERATION						
Knob Adjustable				K		
Lock Nut Adjustable				L		
Fixed				F		
ENCLOSURE STYLE						
8-pin octal plug-in					A	
Blade plug-in					B	
DELAY PERIOD						
See page 77 for standard ranges available						

Example: TDF-120-ALA-300—Repeat cycle, 120 Volts AC or DC, lock nut adjustable from 3 to 300 seconds, 8-pin octal plug-in, UL recognized.

SPECIFICATIONS

TIMING RANGES
Virtually unlimited. See page 77 for standard ranges available.

OUTPUT RATING	DPDT, 10 A @ 250 VAC or 24 VDC, resistive; 211 VA @ 120 VAC, inductive	
TIMING TOLERANCES	Minimum Setting	+0 – 20%
	Maximum Setting	±10%;
REPEATABILITY	1% maximum; no first cycle effect	
RESET TIMES	Before Time Out	100 mSEC
	After Time Out	50 mSEC
RECYCLE TIME	40 mSEC	
SUPPLY VOLTAGE	24 or 120 VAC or VDC, 50/60 Hz; ±10%	
FALSE TRANSFER	No	
REVERSE POLARITY PROTECTED	Yes	
POWER CONSUMPTION	3 watts (approximately)	
TEMPERATURE RATING	Operate	32° to 131°F (0° to +55°C)
	Storage	-49° to 185°F (-45° to +85°C)
LIFE EXPECTANCY	Mechanical	10 million operations (minimum)
	Electrical	100,000 operations @ rated load
WEIGHT	6.4 oz.	

Repeat Cycle–ON Time First Relay Output

OPERATION

Application of voltage to the input of the timer energizes the relay and initiates the ON time. Upon completion of the ON time, the relay de-energizes and the OFF time begins. Upon completion of the OFF time, the relay energizes and one cycle is completed. This ON/OFF cycling continues until voltage is removed from the input. The ON/OFF time periods are independently adjustable.

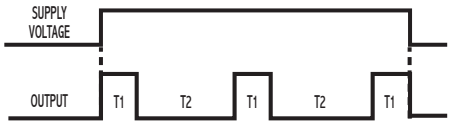

WIRING

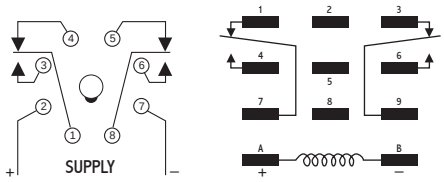

DPDT Octal Plug-in
RB-08/PF083A

DPDT Blade Plug-in
70-463-1

DIMENSIONS (INCHES)

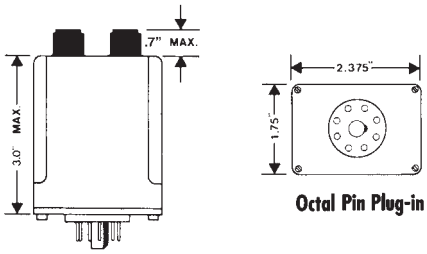

Octal Pin Plug-in

SPECIFICATIONS

TIMING RANGES
Virtually unlimited. See page 77 for standard ranges available.

OUTPUT RATING	DPDT, 10 A @ 250 VAC or 24 VDC, resistive; 211 VA @ 120 VAC, inductive	
TIMING TOLERANCES	Minimum Setting	+0 – 20%
	Maximum Setting	±10%;
REPEATABILITY	1% maximum; no first cycle effect	
RESET TIMES	Before Time Out	100 mSEC
	After Time Out	50 mSEC
RECYCLE TIME	40 mSEC	
SUPPLY VOLTAGE	24 or 120 VAC or VDC, 50/60 Hz; ±10%	
FALSE TRANSFER	No	
REVERSE POLARITY PROTECTED	Yes	
POWER CONSUMPTION	3 watts (approximately)	
DUTY CYCLE	Continuous	
TEMPERATURE RATING	Operate	32° to 131°F (0° to +55°C)
	Storage	-49° to 185°F (-45° to +85°C)
LIFE EXPECTANCY	Mechanical	10 million operations (minimum)
	Electrical	100,000 operations @ rated load
WEIGHT	6.4 oz.	

MODEL NUMBER

MODEL NUMBER	TDG		A			
SUPPLY VOLTAGE						
24 VAC or DC		24				
110/120 VAC or DC		120				
TYPE OF OPERATION						
Knob Adjustable				K		
Lock Nut Adjustable				L		
Fixed				F		
ENCLOSURE STYLE						
8-pin octal plug-in					A	
Blade plug-in					B	
DELAY PERIOD See page 77 for standard ranges available						

Example: TDG-120-AKA-300 - Repeat cycle , On time first, 120 Volts AC or DC, Knob adjustable, both delays independantly adjustable from 3 seconds to 300 seconds, 8 pin octal plug-in.

OPERATION

Application of voltage to the input of the timer initiates the OFF time. Upon completion of the OFF time, the relay energizes and the ON time begins. Upon completion of the ON time, the relay de-energizes and the cycle is complete. Reset during or after the time periods is accomplished by removal of the input voltage. The OFF/ON time periods are independently adjustable.

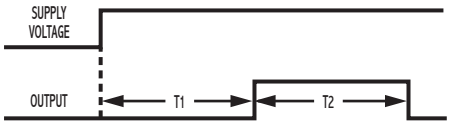

E55826

Delayed Interval Relay Output

WIRING

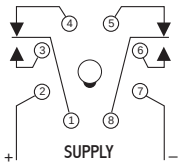

DPDT Octal Plug-in
RB-08/PF083A

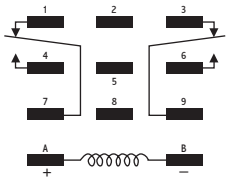

DPDT Blade Plug-in
70-463-1

DIMENSIONS (INCHES)

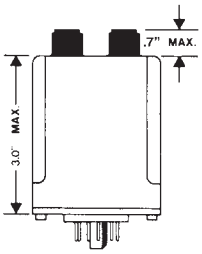

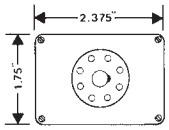

Octal Pin Plug-in

MODEL NUMBER

MODEL NUMBER	TDH		A			
SUPPLY VOLTAGE						
24 VAC or DC		24				
110/120 VAC or DC		120				
TYPE OF OPERATION						
Knob Adjustable				K		
Lock Nut Adjustable				L		
Fixed				F		
ENCLOSURE STYLE						
8-pin octal plug-in					A	
Blade plug-in					B	
DELAY PERIOD						
See page 77 for standard ranges available						

Example: TDH-120-ALA-300—Delayed interval, 120 Volts AC or DC, both delays are independently adjustable from 3 to 300 seconds, 8-pin octal plug-in, UL Recognized.

SPECIFICATIONS

TIMING RANGES	Virtually unlimited. See page 77 for standard ranges available.	
OUTPUT RATING	DPDT, 10 A @ 250 VAC or 24 VDC, resistive; 211 VA @ 120 VAC, inductive	
TIMING TOLERANCES	Minimum Setting	+0 – 20%
	Maximum Setting	±10%;
REPEATABILITY	1% maximum; no first cycle effect	
RESET TIMES	Before Time Out	100 mSEC
	After Time Out	50 mSEC
RECYCLE TIME	40 mSEC	
SUPPLY VOLTAGE	24 or 120 VAC or VDC, 50/60 Hz; ±10%	
FALSE TRANSFER	No	
REVERSE POLARITY PROTECTED	Yes	
POWER CONSUMPTION	3 watts (approximately)	
TEMPERATURE RATING	Operate	32° to 131°F (0° to +55°C)
	Storage	-49° to 185°F (-45° to +85°C)
LIFE EXPECTANCY	Mechanical	10 million operations (minimum)
	Electrical	100,000 operations @ rated load
WEIGHT	6.4 oz.	

c UL us
E55826

Delayed Single Shot Relay Output

OPERATION

Voltage is continuously applied to the input. An external isolated switch controls the timer. When closed (momentary or maintained), the OFF time begins. Upon completion of the OFF time, the relay energizes and the ON time begins. Upon completion of the ON time, the relay de-energizes and the cycle is complete. Reset is accomplished by reclosing the control switch after the timing cycle has completed. The OFF/ON time periods are independently adjustable.

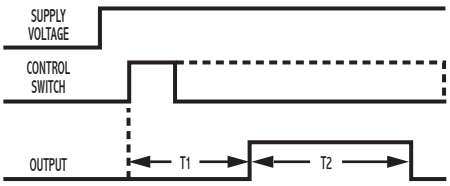

WIRING

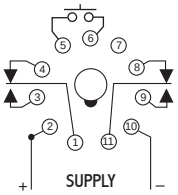

DPDT 11 Pin Plug-in
RB-11/PF113A

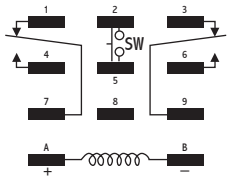

DPDT Blade Plug-in
70-463-1

DIMENSIONS (INCHES)

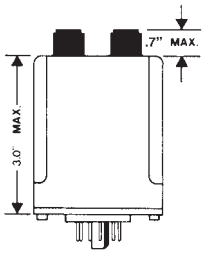

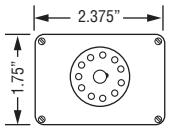

11 Pin Plug-in

SPECIFICATIONS

TIMING RANGES
Virtually unlimited. See page 77 for standard ranges available.

OUTPUT RATING	DPDT, 10 A @ 250 VAC or 24 VDC, resistive; 211 VA @ 120 VAC, inductive	
TIMING TOLERANCES	Minimum Setting	+0 – 20%
	Maximum Setting	±10%;
REPEATABILITY	1% maximum; no first cycle effect	
RESET TIMES	Before Time Out	100 mSEC
	After Time Out	50 mSEC
RECYCLE TIME	40 mSEC	
SUPPLY VOLTAGE	24 or 120 VAC or VDC, 50/60 Hz; ±10%	
FALSE TRANSFER	No	
REVERSE POLARITY PROTECTED	Yes	
POWER CONSUMPTION	3 watts (approximately)	
TEMPERATURE RATING	Operate	32° to 131°F (0° to +55°C)
	Storage	-49° to 185°F (-45° to +85°C)
LIFE EXPECTANCY	Mechanical	10 million operations (minimum)
	Electrical	100,000 operations @ rated load
WEIGHT	6.4 oz.	

MODEL NUMBER

MODEL NUMBER	TDI		A			
SUPPLY VOLTAGE						
24 VAC or DC		24				
110/120 VAC or DC		120				
TYPE OF OPERATION						
Knob Adjustable				K		
Lock Nut Adjustable				L		
Fixed				F		
ENCLOSURE STYLE						
11-pin Round plug-in					A	
Blade plug-in					B	
DELAY PERIOD See page 77 for standard ranges available						

Example: TDI-120-ALA-300—Delayed single shot, 120 Volts AC or DC, lock nut adjustable from 3 to 300 seconds, 11-pin octal plug-in, UL Recognized.

OPERATION

Voltage is continuously applied to the input. An external isolated switch controls the timer. When closed, the ON delay (T1) begins. Upon completion, the relay energizes. When the switch opens, the OFF delay (T2) begins. Upon completion, the relay de-energizes and the cycle is complete. Reset is accomplished by reclosing the control switch after the timing cycle has completed. If the switch opens during the ON delay mode, the relay will remain de-energized and (T1) will reset. If the switch is reclosed during the OFF delay mode, the relay will remain energized and (T2) will reset. Both delay periods are independently adjustable.

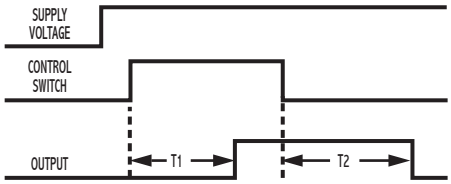

c UL us
E55826

ON-Delay/OFF-Delay Relay Output

WIRING

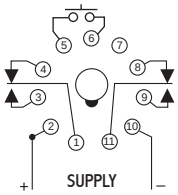

DPDT 11 Pin Plug-in
RB-11/PF113A

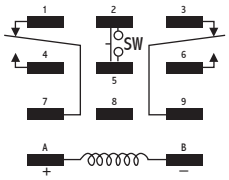

DPDT Blade Plug-in
70-463-1

DIMENSIONS (INCHES)

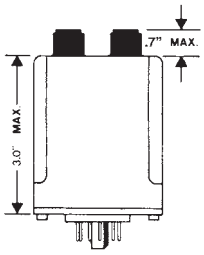

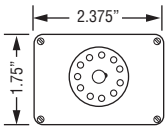

11 Pin Plug-in

MODEL NUMBER

MODEL NUMBER	TDJ		A			
SUPPLY VOLTAGE						
24 VAC or DC		24				
110/120 VAC or DC		120				
TYPE OF OPERATION						
Knob Adjustable				K		
Lock Nut Adjustable				L		
Fixed				F		
ENCLOSURE STYLE						
11-pin Round Plug-in					A	
Blade Plug-in					B	
DELAY PERIOD						
See page 77 for standard ranges available						

Example: TDJ-120-ALA-300—Delay on Operate/Delay on Release, 120 Volts AC or DC, lock nut adjustable from 3 to 300 seconds, 11-pin octal plug-in, UL recognized.

SPECIFICATIONS

TIMING RANGES
Virtually unlimited. See page 77 for standard ranges available.

OUTPUT RATING	DPDT, 10 A @ 250 VAC or 24 VDC, resistive; 211 VA @ 120 VAC, inductive	
TIMING TOLERANCES	Minimum Setting	+0 – 20%
	Maximum Setting	±10%;
REPEATABILITY	1% maximum; no first cycle effect	
RESET TIMES	Before Time Out	100 mSEC
	After Time Out	50 mSEC
RECYCLE TIME	40 mSEC	
SUPPLY VOLTAGE	24 or 120 VAC or VDC, 50/60 Hz; ±10%	
FALSE TRANSFER	No	
REVERSE POLARITY PROTECTED	Yes	
POWER CONSUMPTION	3 watts (approximately)	
DUTY CYCLE	Continuous	
TEMPERATURE RATING	Operate	32° to 131°F (0° to +55°C)
	Storage	-49° to 185°F (-45° to +85°C)
LIFE EXPECTANCY	Mechanical	10 million operations (minimum)
	Electrical	100,000 operations @ rated load
WEIGHT	6.4 oz.	

C UL US
E55826

Flasher Relay Output

OPERATION

When power is applied to the input, the OFF time begins. Upon completion of the OFF time, the relay energizes and the ON time begins. Upon completion of the ON time, the relay de-energizes and one cycle is complete. This OFF/ON cycling continues until the voltage is removed from the input. THE OFF TIME ALWAYS EQUALS THE ON TIME.

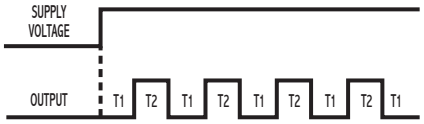

WIRING

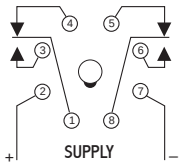

DPDT Octal Plug-in
RB-08/PF083A

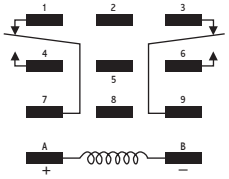

DPDT Blade Plug-in
70-463-1

SPECIFICATIONS

TIMING RANGES
Virtually unlimited. See page 77 for standard ranges available.

OUTPUT RATING	DPDT, 10 A @ 250 VAC or 24 VDC, resistive; 211 VA @ 120 VAC, inductive	
DUTY CYCLE	50%	
SUPPLY VOLTAGE	24 or 120 VAC or VDC, 50/60 Hz; ±10%	
FALSE TRANSFER	No	
REVERSE POLARITY PROTECTED	Yes	
POWER CONSUMPTION	3 watts (approximately)	
TEMPERATURE RATING	Operate	32° to 131°F (0° to +55°C)
	Storage	-49° to 185°F (-45° to +85°C)
LIFE EXPECTANCY	Mechanical	10 million operations (minimum)
	Electrical	100,000 operations @ rated load
WEIGHT	5.6 oz.	

DIMENSIONS (INCHES)

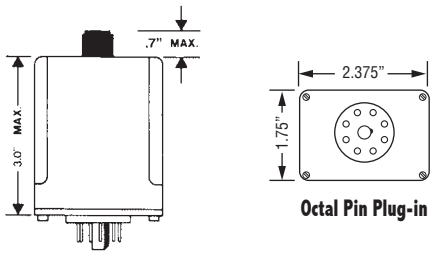

Octal Pin Plug-in

MODEL NUMBER

MODEL NUMBER	TDL		A			
SUPPLY VOLTAGE						
24 VAC or DC		24				
110/120 VAC or DC		120				
TYPE OF OPERATION						
Knob Adjustable				K		
Lock Nut Adjustable				L		
Fixed				F		
ENCLOSURE STYLE						
8-pin octal plug-in					A	
Blade plug-in					B	
DELAY PERIOD						
See page 77 for standard ranges available						

Example: TDL-120-ALA-300—Flasher, 120 Volts AC or DC, lock nut adjustable from 3 to 300 seconds, 8-pin octal plug-in, UL recognized.

OPERATION

When voltage is applied to the input, the internal relay energizes and the ON time (T1) begins. Upon completion of the ON time, the relay de-energizes and the OFF time (T2) begins. At the completion of the OFF time, one ON/OFF cycle is completed. This cycling action continues until voltage is removed from the input. The ON/OFF ratio is adjustable from 0 to 100 percent of time base. 0% is OFF; 100% is ON. Reset is accomplished by interrupting the input voltage.

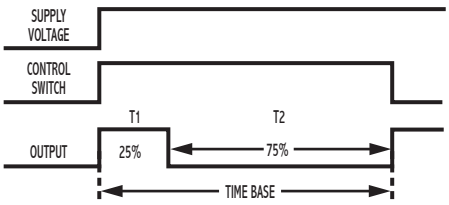

Example shows 25% setting.

E55826

Percentage Timer Relay Output

WIRING

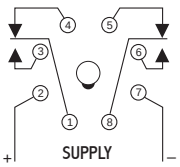

DPDT Octal Plug-in
RB-08/PF083A

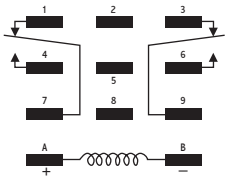

DPDT Blade Plug-in
70-463-1

DIMENSIONS (INCHES)

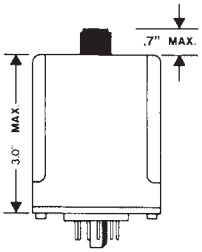

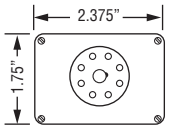

Octal Pin Plug-in

MODEL NUMBER

MODEL NUMBER	TDP		A			
SUPPLY VOLTAGE						
24 VAC or DC		24				
110/120 VAC or DC		120				
TYPE OF OPERATION						
Knob Adjustable				K		
Lock Nut Adjustable				L		
ENCLOSURE STYLE						
8-pin octal plug-in					A	
Blade plug-in					B	
TIME BASE						
60 sec						060
300 sec						300
600 sec						600
900 sec						900
30 min						30m
60 min						60m

Example: TDP-120-AKA-300—Percentage on/off, 120 Volts AC or DC, knob adjustable, time range from 3 to 300 seconds, 8-pin octal plug-in.

SPECIFICATIONS

OUTPUT RATING	DPDT, 10 A @ 250 VAC or 24 VDC, resistive; 211 VA @ 120 VAC, inductive	
TIME BASE TOLERANCES	±10%	
REPEATABILITY	0.5% typical	
ADJUSTABILITY	0 to 100% of time base	
TIME BASE	See ordering information	
SUPPLY VOLTAGE	24 or 120 VAC or VDC,50/60 Hz;±10%	
FALSE TRANSFER	No	
REVERSE POLARITY PROTECTED	Yes	
POWER CONSUMPTION	2 watts (approximately)	
TEMPERATURE RATING	Operate	32° to 131°F (0° to +55°C)
	Storage	-49° to 185°F (-45° to +85°C)
LIFE EXPECTANCY	Mechanical	10 million operations (minimum)
	Electrical	100,000 operations @ rated load
WEIGHT	5.6 oz.	

C UL US
E55826

True OFF-Delay Relay Output

SPECIFICATIONS

OUTPUT RATING	DPDT, 10 A @ 250 VAC or 24 VDC, resistive; 211 VA @ 120 VAC, inductive	
TIME TOLERANCES	Minimum Setting	+0 – 20%
	Maximum Setting	±10%
REPEATABILITY	1%	
RESET TIMES	0.5 seconds	
SUPPLY VOLTAGE	24 or 110/120 or 208/240 VAC, 50/60 Hz, or VDC; and 48 VDC; ±10%	
FALSE TRANSFER	No	
REVERSE POLARITY PROTECTED	Yes	
POWER CONSUMPTION	3 watts (approximately)	
TEMPERATURE RATING	Operate	32° to 131°F (0° to +55°C)
	Storage	-49° to 185°F (-45° to +85°C)
LIFE EXPECTANCY	Mechanical	10 million operations (minimum)
	Electrical	100,000 operations @ rated load
WEIGHT	4.5 oz.	

DIMENSIONS (INCHES)

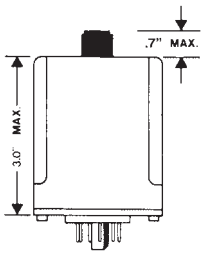

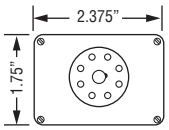

Octal Pin Plug-in

OPERATION

When voltage is applied to the input, the relay energizes. When voltage is removed, the OFF delay begins. Upon completion of the delay period, the relay de-energizes. Reset is accomplished by reapplying voltage to the input terminals. NOTE: If voltage is reapplied during the delay period, the relay remains picked up and the timer resets to zero. VOLTAGE MUST BE APPLIED FOR A MINIMUM OF 0.5 SECONDS TO ASSURE PROPER OPERATION.

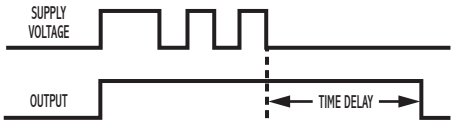

WIRING

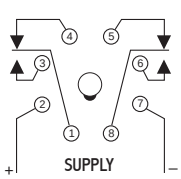

DPDT Octal Plug-in
RB-08/PF083A

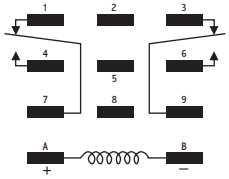

DPDT Blade Plug-in
70-463-1

MODEL NUMBER

MODEL NUMBER	TDT				
SUPPLY VOLTAGE					
24 VAC or DC		24			
48 Volts DC		48			
110/120 VAC or DC		120			
208/240 VAC or DC		240			
TYPE OF VOLTAGE					
AC and DC operation			A		
DC operation only (D Designation used for 48V model only)			D		
TYPE OF OPERATION					
Knob Adjustable				K	
Lock Nut Adjustable				L	
Fixed				F	
ENCLOSURE STYLE					
8-pin octal plug-in					A
Blade plug-in					B
DELAY PERIOD					
010 = .1 to 10 SEC					010
030 = .3 to 30 SEC					030
060 = .6 to 60 SEC					060
100 = 1 to 100 SEC					100
200 = 2 to 200 SEC					200
300 = 3 to 300 SEC					300

Example: TDT-120-ALA-300—True off delay, 120 Volts AC or DC, Lock-nut adjustable, time range from 3 to 300 seconds, 8-pin octal plug-in.

The TDU Series is one of the most versatile single timers available today. One model replaces forty-eight industry standard devices; 4 wide delay ranges x 6 most common modes of operation x 2 supply voltages—since they will operate on both AC and DC. The CMOS digital circuitry provides high accuracy, repeatability and fast reset times. The heavy duty relays are rated for continuous operation at 10 amps. All programming is easily accomplished externally by using one or more jumpers between designated base pins—no trap doors to open, no switches to set, no disassembly required.

C UL US
E55826

Programmable Multi-Mode Relay Output

WIRING

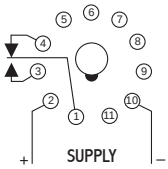

SPDT 11 Pin Plug-in
RB-11/PF113A

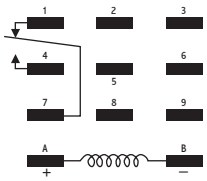

SPDT Blade Plug-in
70-463-1

DIMENSIONS (INCHES)

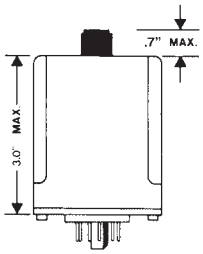

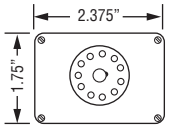

11 Pin Plug-in

MODEL NUMBER

MODEL NUMBER	TDU				
SUPPLY VOLTAGE					
12 VDC		12	D		
24 VAC or DC		24	A		
48 VDC		48	D		
110/120 VAC or DC		120	A		
240 VAC		240	A		
TYPE OF OPERATION					
Knob Adjustable				K	
Lock Nut Adjustable				L	
ENCLOSURE STYLE					
11-pin Round Plug-in					A
Blade Plug-in					B

Example: TDU-120-AKA—Multi mode, 120 Volts AC or DC, knob adjustable, 11-pin round plug-in, multi range .15 seconds to 64 minutes.

SPECIFICATIONS

TIMING RANGES	1	0.15 to 15 SEC
	2	0.6 to 60 SEC
	3	5 to 480 SEC
	4	0.6 to 64 MIN
OPERATING MODES	1	Interval
	2	ON-Delay
	3	OFF-Delay
	4	Single Shot
	5	Flasher – OFF First
	6	Flasher – ON First
OUTPUT RATING	SPDT, 10 A @ 24 VDC or 250 VAC, resistive; 211 VA @ 120 VAC, inductive	
TIMING TOLERANCES	Minimum Setting	+0 – 20%
	Maximum Setting	±10%
REPEATABILITY	0.1% typical; 0.5% maximum	
RESET TIMES	Before Time Out	100 mSEC
	After Time Out	50 mSEC
RECYCLE TIME	40 mSEC	
SUPPLY VOLTAGE	24, 120 or 240 VAC, 50/60 Hz; or 12, 24, 48 or 110 VDC, ±10%	
FALSE TRANSFER	No	
REVERSE POLARITY PROTECTED	Yes	
POWER CONSUMPTION	3 watts (approximately)	
TEMPERATURE RATING	Operate	32° to 131°F (0° to +55°C)
	Storage	-49° to 185°F (-45° to +85°C)
LIFE EXPECTANCY	Mechanical	10 million operations (minimum)
	Electrical	100,000 operations @ rated load
WEIGHT	5 oz.	

TIMING RANGE SELECTION

CAUTION: DO NOT PROGRAM WITH POWER ON! WIRE FOR ONE TIMING RANGE ONLY!

4 different ranges can be obtained by either leaving 2 designated terminals unconnected or by connecting them to the appropriate terminals shown below. Because the Time Delay programming is the same regardless of the mode of operation only the wiring connections affecting the Time Delay are shown here.

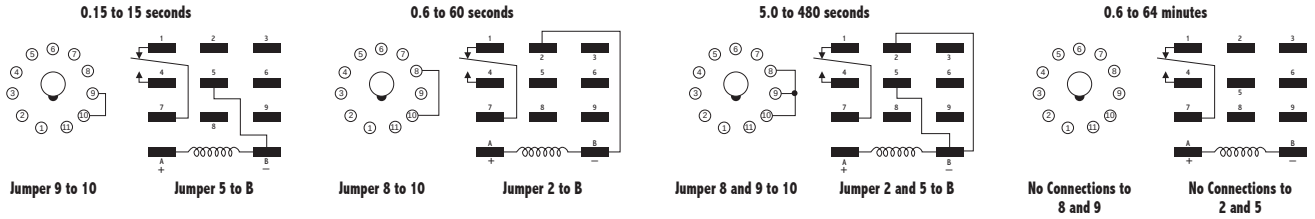

OPERATION—WIRE FOR ONE MODE ONLY!

INTERVAL: When voltage is applied to the input terminals, the relay energizes and the time delay begins. Upon completion of the delay period, the relay de-energizes. Reset during or after the delay period is accomplished by removal of the supply voltage.

ON-DELAY: The time delay begins when power is applied to the input. Upon completion of the delay period, the relay energizes. Reset during or after the delay period is accomplished by removal of the input voltage. The timer will not false transfer if supply voltage is removed prior to completion of the delay period.

OFF-DELAY: Voltage is continuously applied to the input. An external isolated switch controls the timer. When closed, the relay energizes. Opening the switch initiates the delay period. Upon completion of the delay period, the relay de-energizes. If the control switch recloses during the delay period, the relay remains energized and the timer resets to zero.

SINGLE-SHOT: Voltage is continuously applied to the input. An external isolated switch controls the timer. When closed (momentary or maintained), the relay energizes and the delay period begins. Upon completion of the delay period, the relay de-energizes.

FLASHER—OFF TIME FIRST: When supply voltage is applied to the input, the OFF time begins. Upon completion of the OFF time, the relay energizes and the ON time begins. Upon completion of the ON time, the relay de-energized and one cycle is complete. This OFF/ON cycling continues until supply voltage is removed from the input. The OFF time always equals the ON time.

FLASHER—ON TIME FIRST: When power is applied to the input, the relay energizes and ON time begins. Upon completion of the ON time, the relay de-energizes and the OFF time begins. Upon completion of the OFF time, the relay energizes and one cycle is complete. This ON/OFF cycling continues until supply voltage is removed from the input. The ON time always equals the off time.

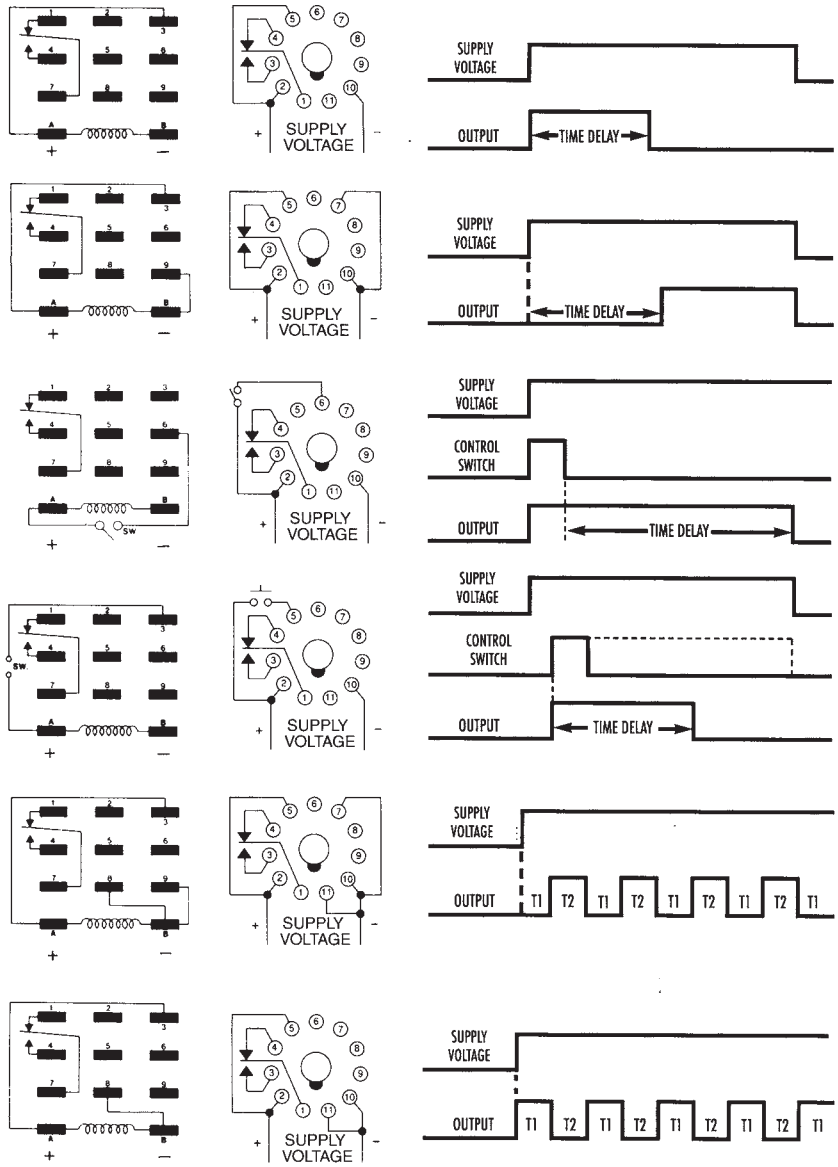

STANDARD DELAY RANGES AVAILABLE

The chart below shows the standard adjustable time delay ranges available. The part number suffix equals the maximum adjustable delay period of the timer. No letters following the suffix number indicates the delay period in seconds; an M indicates minutes; and an H indicates hours.

STANDARD DELAY RANGE CHART

PART NUMBER SUFFIX	MINIMUM SETTING	MAXIMUM SETTING
010	0.1 seconds	10 seconds
030	0.3 seconds	30 seconds
060	0.6 seconds	60 seconds
100	1 second	100 seconds
200	2 seconds	200 seconds
300	3 seconds	300 seconds
600	6 seconds	600 seconds
900	9 seconds	900 seconds
30M	18 seconds	30 minutes
60M	36 seconds	60 minutes
90M	54 seconds	90 minutes
2H	1.2 Minutes	2 hours
4H	2.4 Minutes	4 hours
8H	4.8 Minutes	8 hours
12H	7.2 Minutes	12 hours
16H	9.6 Minutes	16 hours
20H	12 Minutes	20 hours
24H	14.4 Minutes	24 hours

Longer delays available upon request. Consult Factory

EXTERNAL RESISTANCE SELECTION

On models specified as having the external resistor adjustability feature, the delay period is set by placing resistance across designated pins or terminals. One meg ohm resistance provides the maximum delay on all models. The minimum delay is obtained by jumping the terminals together.

The resistor or potentiometer chosen should be a 1/4 watt or larger.

To determine the resistor value required for a specific time delay, use the following formula:

$R_{ext} = (T_{des}/T_{max}) \times 1000$

R_{ext} = Resistance value required to obtain T_{des} (in K ohms)

T_{des} = Desired time delay

T_{max} = Maximum delay period of the timer

Example: Model TDC-120-ARC-300; find the external resistance value required for a 240 second delay:

$$R_{ext} = \frac{240}{300} \times 1000 = 800 \text{ K ohms}$$

"FIXED" DELAY OPTION

Most ATC Diversified timers are available with the delay period factory preset ("fixed") for some specified duration. When this option is ordered, the part number should have an "F" in the Type of Operation designation: and the last digits should specify the desired time delay in seconds (S), minutes (M), or hours (H).

Example: TDC 120-AFA-30M—delay-on-operate,120 Volts AC or DC, 8-pin octal plug-in package with a 30 minute fixed delay.

OFF/ON DELAY TIMERS

Included in ATC Diversified's broad line of timers are six (6) models that feature independent OFF/ON delay adjustments. They are TDF, TDH, TDI, TSF, and TSH. Notice in the ordering information section on each of their respective pages the timing range is specified by a three (3) digit suffix. This indicates that both the OFF and ON delay periods have the same timing ranges. Example: TDF-120-ALA-300: Both OFF and ON delay periods are independently adjustable from 3 to 300 seconds.

In the event that two (2) separate delay ranges would be required, the part number is modified to add a slash (/) followed by three (3) more digits. Since the OFF delay (TI) is first in all models, it is specified first in the part number. Example: TDF-120-ALA-12H/30M: the OFF delay is adjustable from 7.2 minutes to 12 hours and the ON delay is adjustable from 18 seconds to 30 minutes.

NOTE: Combinations of various "types of operation" are available: fixed/adjustable, knob/lock nut, etc. Consult factory.

MODEL NUMBER

MODEL NUMBER	T							
TIME DELAY								
SERIES								
Relay Output		D,U						
Solid State Output		S						
MODE OF OPERATION								
SUPPLY VOLTAGE								
24 Volts				24				
120 Volts				120				
240 Volts				240				
TYPE OF VOLTAGE								
AC					A			
DC					D			
TYPE OF OPERATION								
Knob Adjustment						K		
Lock Nut Adjustment						L		
Fixed (Factory Preset)						F		
External Resistor Adjustable						R		
ENCLOSURE STYLE								
8 or 11-pin Round Plug-in								A
Blade Plug-in							B	
Potted Cube							C	
DELAY PERIOD								
See Standard Delay Range Chart								

NOTE: Not all time delays are available with each option shown above. The specific options for each timer type are described on their respective pages.

E55826

Interval Solid-State Output

OPERATION

When voltage is applied to the input terminals, the load energizes and the time delay begins. Upon completion of the delay period, the load de-energizes. Reset during or after the delay period is accomplished by removal of the input voltage. The TSA Series is a two input terminal device that connects in series with the input and load.

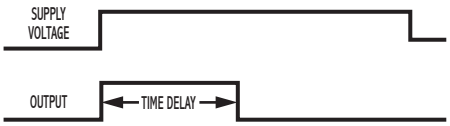

WIRING

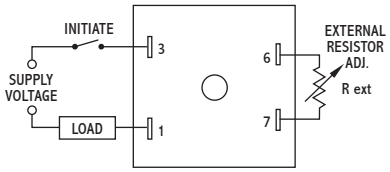

R = OPERATION

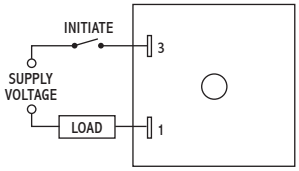

F = OPERATION

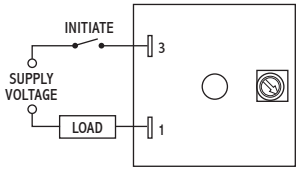

S = OPERATION

SPECIFICATIONS

TIMING RANGES	Virtually unlimited. See page 77 for standard ranges available.	
OUTPUT RATING	Solid-state, SPST-N.O. 1 amp resistive; 1A resistive or 25VA 1A resistive or 125VA 0.5A resistive or 125VA	
TIMING TOLERANCES	Minimum Setting	+0 – 20%
	Maximum Setting	±10%
REPEATABILITY	1% maximum; no first cycle effect	
RESET TIMES	Before Time Out	100 mSEC
	After Time Out	50 mSEC
RECYCLE TIME	40 mSEC	
SUPPLY VOLTAGE	24 to 240 ±10% VAC, 50/60 Hz	
FALSE TRANSFER	No	
ENCLOSURE	Surface mounted; totally encapsulated with a high quality epoxy for environmental protection.	
TEMPERATURE RATING	Operate	32° to 131°F (0° to +55°C)
	Storage	-49° to 185°F (-45° to +85°C)
TERMINATIONS	1/4" quick disconnect terminals	
WEIGHT	NET: 1.28 oz Shipping: 1.6 oz.	

DIMENSIONS (INCHES)

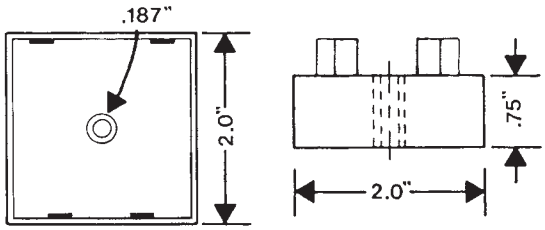

MODEL NUMBER

MODEL NUMBER	TSA	100	A		C	
TYPE OF OPERATION						
Fixed (Factory Preset)				F		
External Resistor Adjustable; See page 77 for resistor selection.				R		
Screwdriver Adjustable				S		
DELAY PERIOD See page 77 for standard ranges available						

Example: TSA-100-ARC-100—Interval on operate, 24 to 240 VAC, external resistor adjustable from 1 to 100 seconds.

OPERATION

When voltage is applied to the input terminals, the load energizes and the time delay begins. Upon completion of the delay period, the load de-energizes. Reset during or after the delay period is accomplished by removal of the input voltage. The Series TSB is a three input terminal device.

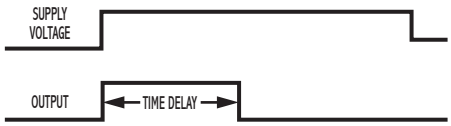

c UL us
E55826
120 VAC only

Interval Solid-State Output

WIRING

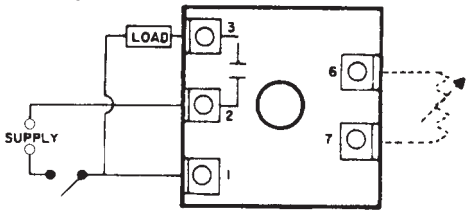

DIMENSIONS (INCHES)

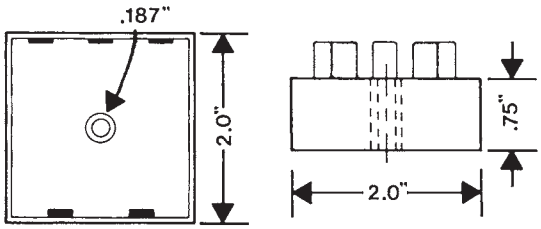

MODEL NUMBER

MODEL NUMBER	TSB		A		C	
SUPPLY VOLTAGE						
24 VAC		24				
120 VAC		120				
240 VAC		240				
TYPE OF OPERATION						
Fixed (Factory Preset)				F		
External Resistor Adjustable; See page 77 for resistor selection.				R		
Screwdriver Adjustable (Not available with 240V)					S	
DELAY PERIOD						
See page 77 for standard ranges available						

Example: TSB-120-ARC-100—Interval on operate, 120 Volts AC, external resistor adjustable from 1 to 100 seconds.

Note: *The TSB series is only UL recognized in the 120 VAC model.

SPECIFICATIONS

TIMING RANGES	Virtually unlimited. See page 77 for standard ranges available.	
OUTPUT RATING	Solid-state, SPST-N.O. 1 amp resistive; 1 amp 25VA @ 24VAC; 1 amp 125VA @ 120VAC; .5 amp 125VA @ 240 VAC	
TIMING TOLERANCES	Minimum Setting	+0 – 20%
	Maximum Setting	±10%
REPEATABILITY	1% maximum; no first cycle effect	
RESET TIMES	Before Time Out	100 mSEC
	After Time Out	50 mSEC
RECYCLE TIME	40 mSEC	
SUPPLY VOLTAGE	24 to 240 ±10% VAC, 50/60 Hz	
FALSE TRANSFER	No	
ENCLOSURE	Surface mounted; totally encapsulated with a high quality epoxy for environmental protection.	
TEMPERATURE RATING	Operate	32° to 131°F (0° to +55°C)
	Storage	-49° to 185°F (-45° to +85°C)
TERMINATIONS	1/4" quick disconnect terminals	
WEIGHT	NET: 1.28 oz Shipping: 1.6 oz.	

c UL us
E55826

ON-Delay Solid State Output

OPERATION

The time delay begins when power is applied to the timer. Upon completion of the delay period, the load energizes. Reset during or after the delay period is accomplished by removal of the input voltage. The TSC will not false transfer if voltage is removed prior to completion of the delay period. A fast recycle time permits accurate, high speed, continuous operation.

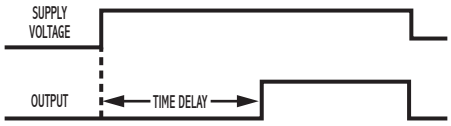

WIRING

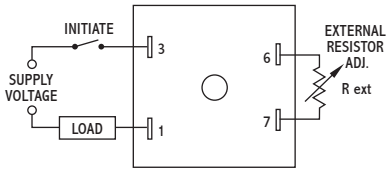

R = OPERATION

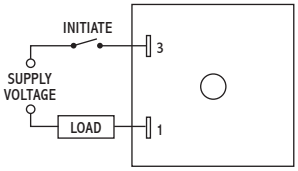

F = OPERATION

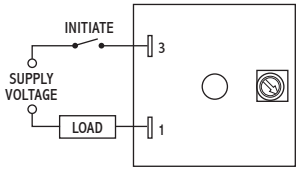

S = OPERATION

SPECIFICATIONS

TIMING RANGES	Virtually unlimited. See page 77 for standard ranges available.	
OUTPUT RATING	Solid-state, SPST-N.O. 1 amp resistive; 1 amp 25VA @ 24VAC 1 amp 125VA @ 120VAC .5 amp 125VA @ 240 VAC	
TIMING TOLERANCES	Minimum Setting	+0 – 20%
	Maximum Setting	±10%
REPEATABILITY	1% maximum; no first cycle effect	
RESET TIMES	Before Time Out	100 mSEC
	After Time Out	50 mSEC
RECYCLE TIME	40 mSEC	
SUPPLY VOLTAGE	12 to 240 VDC, 24 to 240 VAC ±10%, 50/60 Hz	
FALSE TRANSFER	No	
ENCLOSURE	Surface mounted; totally encapsulated with a high quality epoxy for environmental protection.	
TEMPERATURE RATING	Operate	32° to 131°F (0° to +55°C)
	Storage	-49° to 185°F (-45° to +85°C)
TERMINATIONS	1/4" quick disconnect terminals	
WEIGHT	NET: 1.28 oz Shipping: 1.6 oz.	

DIMENSIONS (INCHES)

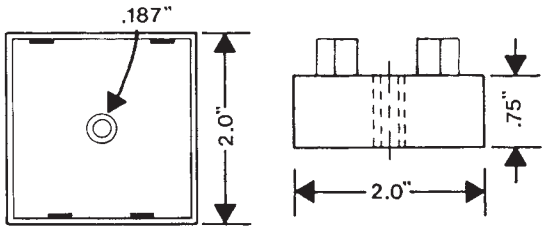

MODEL NUMBER

MODEL NUMBER	TSC	100	A		C	
TYPE OF OPERATION						
Fixed (Factory Preset)				F		
External Resistor Adjustable; See page 77 for resistor selection.				R		
Screwdriver Adjustable				S		
DELAY PERIOD See page 77 for standard ranges available						

Example: TSC-100-ARC-100—Delay on operate, external resistor adjustable from 1 to 100 seconds, UL recognized.

OPERATION

Voltage is continuously applied to the input. An external isolated switch controls the timer. When closed, the load energizes. Opening the switch initiates the delay period. Upon completion of the delay period, the load de-energizes. If the control switch recloses during the delay period, the load remains energized and the timer resets to zero.

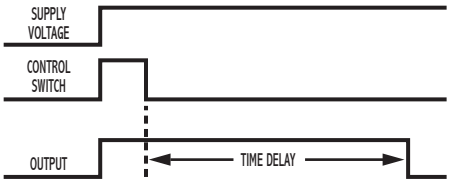

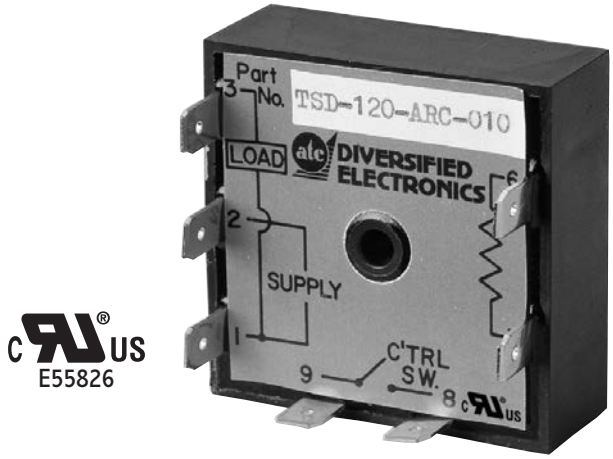

OFF-Delay Solid-State Output

WIRING

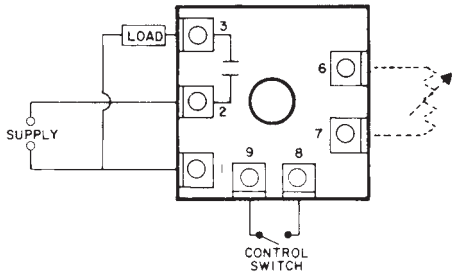

DIMENSIONS (INCHES)

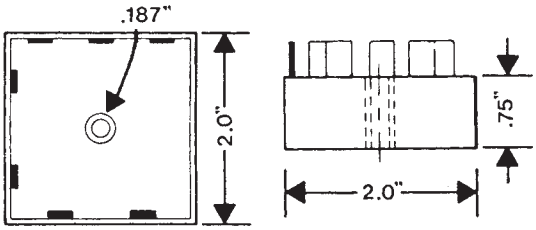

MODEL NUMBER

MODEL NUMBER	TSD		A		C	
SUPPLY VOLTAGE						
120 VAC		120				
240 VAC		240				
TYPE OF OPERATION						
Fixed				F		
External Resistor Adjustable; See page 77 for standard ranges available				R		
DELAY PERIOD						

Example: TSD-120-ARC-200—Delay on Release, 120 VAC, external resistor adjustable from 2 to 200 seconds, UL recognized.

SPECIFICATIONS

TIMING RANGES	Virtually unlimited. See page 77 for standard ranges available.	
OUTPUT RATING	Solid-state, SPST-N.O. 1 amp resistive; 1 amp 25VA @ 24VAC; 1 amp 125VA @ 120VAC; .5 amp 125VA @ 240 VAC	
TIMING TOLERANCES	Minimum Setting	+0 – 20%
	Maximum Setting	±10%
REPEATABILITY	1% maximum; no first cycle effect	
RESET TIMES	Before Time Out	100 mSEC
	After Time Out	50 mSEC
RECYCLE TIME	40 mSEC	
SUPPLY VOLTAGE	120 or 240 VAC, 50/60 Hz;±10%	
FALSE TRANSFER	No	
ENCLOSURE	Surface mounted; totally encapsulated with a high quality epoxy for environmental protection.	
TEMPERATURE RATING	Operate	32° to 131°F (0° to +55°C)
	Storage	-49° to 185°F (-45° to +85°C)
TERMINATIONS	1/4" quick disconnect terminals	
WEIGHT	NET: 1.28 oz. Shipping: 1.6 oz.	

c UL us
E55826

Single Shot Solid-State Output

OPERATION

Voltage is continuously applied to the input. An external isolated switch controls the timer. When closed (momentary or maintained), the load energizes and the delay period begins. Upon completion of the delay period, the load de-energizes.

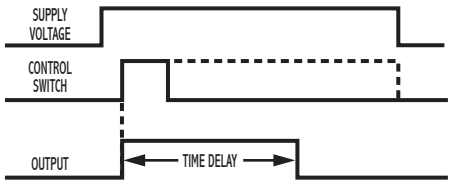

WIRING

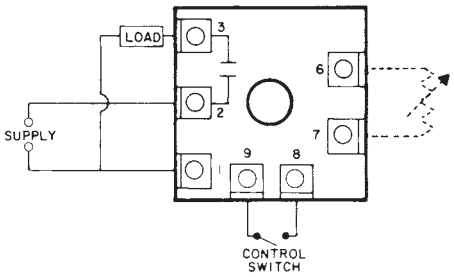

SPECIFICATIONS

TIMING RANGES	Virtually unlimited. See page 77 for standard ranges available.	
OUTPUT RATING	Solid-state, SPST-N.O. 1 amp resistive; 1 amp 25VA @ 24VAC 1 amp 125VA @ 120VAC .5 amp 125VA @ 240 VAC	
TIMING TOLERANCES	Minimum Setting	+0 – 20%
	Maximum Setting	±10%
REPEATABILITY	1% maximum; no first cycle effect	
RESET TIMES	Before Time Out	100 mSEC
	After Time Out	50 mSEC
RECYCLE TIME	40 mSEC	
SUPPLY VOLTAGE	24, 120, or 240 VAC, 50/60 Hz; ±10%	
FALSE TRANSFER	No	
ENCLOSURE	Surface mounted; totally encapsulated with a high quality epoxy for environmental protection.	
TEMPERATURE RATING	Operate	32° to 131°F (0° to +55°C)
	Storage	-49° to 185°F (-45° to +85°C)
TERMINATIONS	1/4" quick disconnect terminals	
WEIGHT	NET: 1.28 oz Shipping: 1.6 oz.	

DIMENSIONS (INCHES)

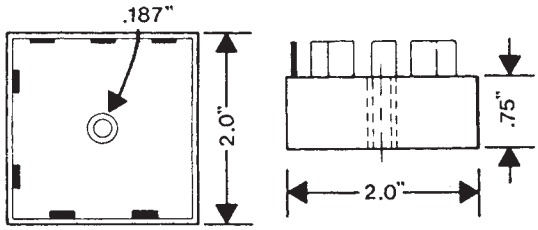

MODEL NUMBER

MODEL NUMBER	TSE		A		C	
SUPPLY VOLTAGE						
24 VAC		24				
120 VAC		120				
240 VAC		240				
TYPE OF OPERATION						
Fixed				F		
External Resistor Adjustable; See page 77 for resistor selection.				R		
DELAY PERIOD See page 77 for standard ranges available						

Example: TSE-120-AFC-180—Single shot, 120 VAC, fixed delay of 180 seconds, UL recognized.

OPERATION

Application of voltage to the input of the timer initiates the OFF time. Upon completion of the OFF time, the load energizes and the ON time begins. Upon completion of the ON time, the load de-energizes and one cycle is completed. This OFF/ON cycling continues until voltage is removed from the input. The OFF/ON time periods are independently adjustable.

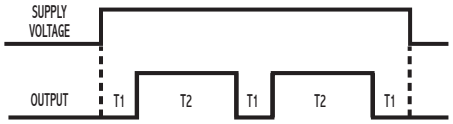

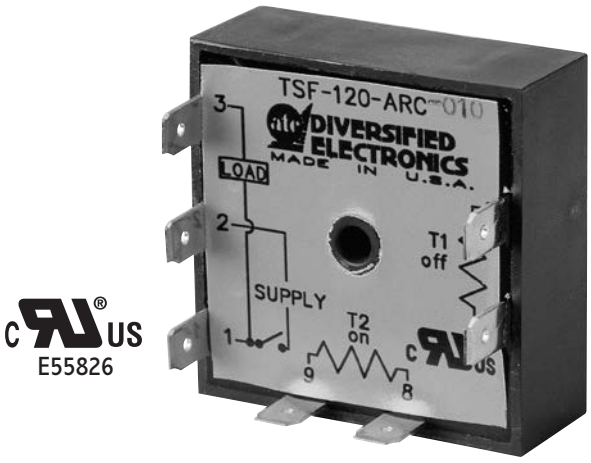

c UL us
E55826

Repeat Cycle OFF-Time
First Solid-State Output

WIRING

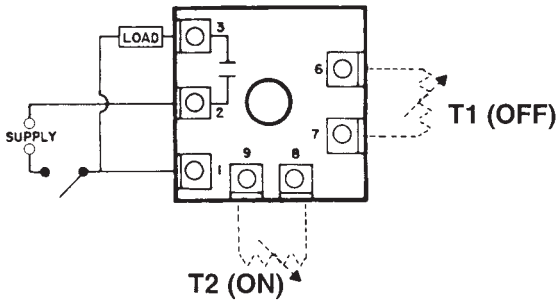

DIMENSIONS (INCHES)

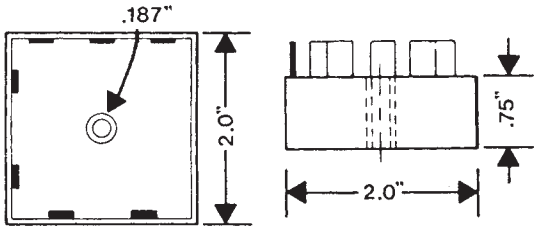

MODEL NUMBER

MODEL NUMBER	TSF		A		C	
SUPPLY VOLTAGE						
24 VAC		24				
120 VAC		120				
240 VAC		240				
TYPE OF OPERATION						
Fixed				F		
External Resistor Adjustable; See page 77 for resistor selection.				R		
DELAY PERIOD See page 77 for standard ranges available						

Example: TSF-24-ARC-300—Repeat cycle, 24 VAC, external resistor adjustable from 3 to 300 seconds, UL Recognized.

SPECIFICATIONS

TIMING RANGES	Virtually unlimited. See page 77 for standard ranges available.	
OUTPUT RATING	Solid-state, SPST-N.O. 1 amp resistive; 1 amp 25VA @ 24VAC 1 amp 125VA @ 120VAC .5 amp 125VA @ 240 VAC	
TIMING TOLERANCES	Minimum Setting	+0 – 20%
	Maximum Setting	±10%
REPEATABILITY	1% maximum; no first cycle effect	
RESET TIMES	Before Time Out	100 mSEC
	After Time Out	50 mSEC
RECYCLE TIME	40 mSEC	
SUPPLY VOLTAGE	24, 120, or 240 VAC, 50/60 Hz; ±10%	
FALSE TRANSFER	No	
DUTY CYCLE	Continuous	
ENCLOSURE	Surface mounted; totally encapsulated with a high quality epoxy for environmental protection.	
TEMPERATURE RATING	Operate	32° to 131°F (0° to +55°C)
	Storage	-49° to 185°F (-45° to +85°C)
TERMINATIONS	1/4" quick disconnect terminals	
WEIGHT	NET: 1.28 oz Shipping: 1.6 oz.	

c UL us
E55826

Repeat Cycle ON-Time
First Solid-State Output

OPERATION

Application of voltage to the input of the timer energizes the load and initiates the ON time. Upon completion of the ON time, the load de-energizes and the OFF time begins. Upon completion of the OFF time, the load energizes and one cycle is completed. This ON/OFF cycling continues until voltage is removed from the input. The ON/OFF time periods are independently adjustable.

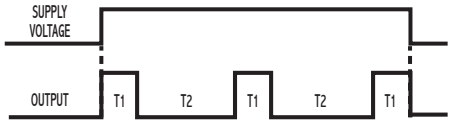

WIRING

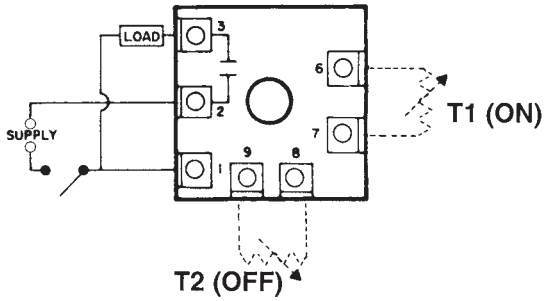

SPECIFICATIONS

TIMING RANGES	Virtually unlimited. See page 77 for standard ranges available.	
OUTPUT RATING	Solid-state, SPST-N.O. 1 amp resistive; 1 amp 25VA @ 24VAC 1 amp 125VA @ 120VAC .5 amp 125VA @ 240 VAC	
TIMING TOLERANCES	Minimum Setting	+0 – 20%
	Maximum Setting	±10%
REPEATABILITY	1% maximum; no first cycle effect	
RESET TIMES	Before Time Out	100 mSEC
	After Time Out	50 mSEC
RECYCLE TIME	40 mSEC	
SUPPLY VOLTAGE	24, 120, or 240 VAC, 50/60 Hz; ±10%	
FALSE TRANSFER	No	
DUTY CYCLE	Continuous	
ENCLOSURE	Surface mounted; totally encapsulated with a high quality epoxy for environmental protection.	
TEMPERATURE RATING	Operate	32° to 131°F (0° to +55°C)
	Storage	-49° to 185°F (-45° to +85°C)
TERMINATIONS	1/4" quick disconnect terminals	
WEIGHT	NET: 1.28 oz Shipping: 1.6 oz.	

DIMENSIONS (INCHES)

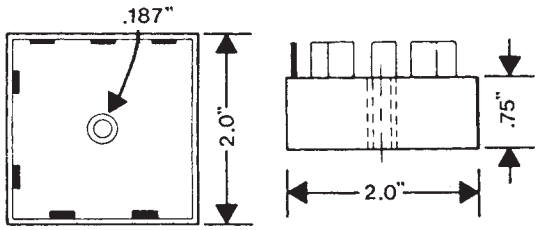

MODEL NUMBER

MODEL NUMBER	TSG		A		C	
SUPPLY VOLTAGE						
24 VAC		24				
120 VAC		120				
240 VAC		240				
TYPE OF OPERATION						
Fixed				F		
External Resistor Adjustable; See page 77 for resistor selection.				R		
DELAY PERIOD See page 77 for standard ranges available						

Example: TSG-24-ARC-300—Repeat cycle, 24 VAC, external resistor adjustable from 3 to 300 seconds, UL recognizable.

OPERATION

Application of voltage to the input of the timer initiates the OFF time. Upon completion of the OFF time, the load energizes and the ON time begins. Upon completion of the ON time, the load de-energizes and the cycle is complete. Reset during or after the time periods is accomplished by removal of the input voltage. The OFF/ON time periods are independently adjustable.

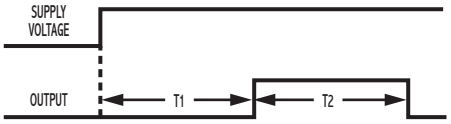

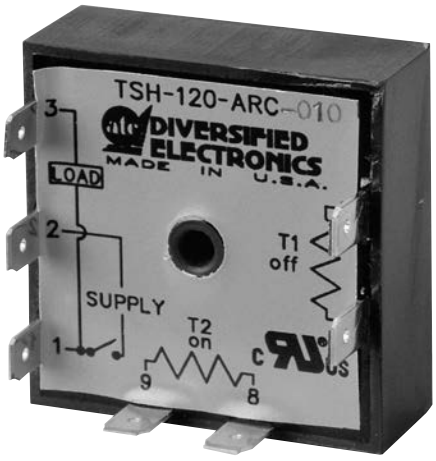

c UL us
E55826

Delayed Interval Solid-State Output

WIRING

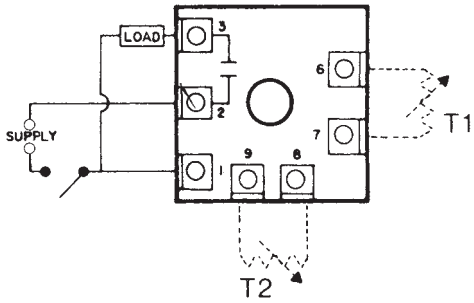

DIMENSIONS (INCHES)

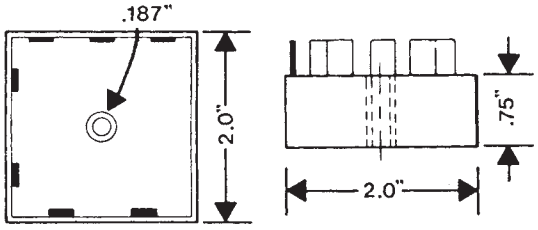

MODEL NUMBER

MODEL NUMBER	TSH		A		C	
SUPPLY VOLTAGE						
24 VAC		24				
120 VAC		120				
240 VAC		240				
TYPE OF OPERATION						
Fixed				F		
External Resistor Adjustable; See page 77 for resistor selection.				R		
DELAY PERIOD See page 77 for standard ranges available						

Example: TSH-120-AFC-015—Delayed interval, 120 VAC, both delays fixed at 15 seconds, UL recognized.

SPECIFICATIONS

TIMING RANGES	Virtually unlimited. See page 77 for standard ranges available.	
OUTPUT RATING	Solid-state, SPST-N.O. 1 amp resistive; 1 amp 25VA @ 24VAC 1 amp 125VA @ 120VAC .5 amp 125VA @ 240 VAC	
TIMING TOLERANCES	Minimum Setting	+0 – 20%
	Maximum Setting	±10%
REPEATABILITY	1% maximum; no first cycle effect	
RESET TIMES	Before Time Out	100 mSEC
	After Time Out	50 mSEC
RECYCLE TIME	40 mSEC	
SUPPLY VOLTAGE	24, 120, or 240 VAC, 50/60 Hz; ±10%	
FALSE TRANSFER	No	
ENCLOSURE	Surface mounted; totally encapsulated with a high quality epoxy for environmental protection.	
TEMPERATURE RATING	Operate	32° to 131°F (0° to +55°C)
	Storage	-49° to 185°F (-45° to +85°C)
TERMINATIONS	1/4" quick disconnect terminals	
WEIGHT	NET: .96 oz Shipping: 1.28 oz.	

Flasher Solid-State Output

OPERATION

When power is applied, the OFF time begins. Upon completion of the OFF time, the load energizes and the ON time begins. Upon completion of the ON time, the load de-energizes and one cycle is complete. This OFF/ON cycling continues until the voltage is removed. THE OFF TIME ALWAYS EQUALS THE ON TIME.

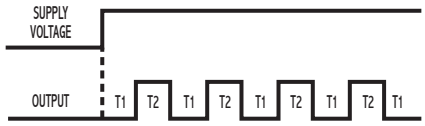

WIRING

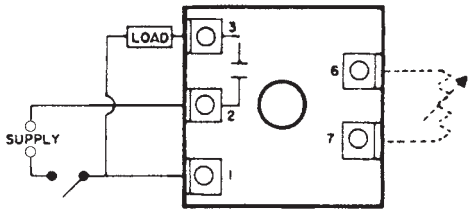

SPECIFICATIONS

OUTPUT RATING	Solid-state, SPST-N.O. 1 amp resistive; 1 amp 25VA @ 24VAC 1 amp 125VA @ 120VAC .5 amp 125VA @ 240 VAC
DELAY PERIOD	Up to 2 hours fixed or external resistor adjustable; see page 77 for standard ranges.
REPEATABILITY	1% maximum; no first cycle effect
LOAD TYPE	Resistive, incandescent, or inductive
SUPPLY VOLTAGE	24, 120 or 240 VAC, 50/60 Hz; ±10%
FALSE TRANSFER	No
DUTY CYCLE	50%
ENCLOSURE	Surface mounted; totally encapsulated with a high quality epoxy for environmental protection.
TEMPERATURE RATING	Operate 32° to 131°F (0° to +55°C) Storage -49° to 185°F (-45° to +85°C)
TERMINATIONS	1/4" quick disconnect terminals
WEIGHT	NET: 1.28 oz Shipping: 1.6 oz.

DIMENSIONS (INCHES)

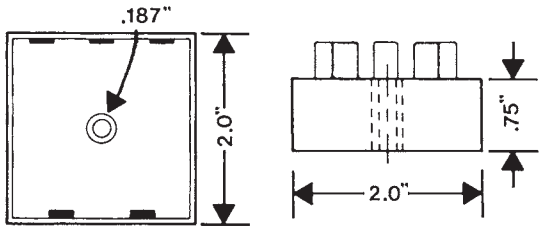

MODEL NUMBER

MODEL NUMBER	TSK		A		C	
SUPPLY VOLTAGE						
24 VAC		24				
120 VAC		120				
240 VAC		240				
TYPE OF OPERATION						
Fixed				F		
External Resistor Adjustable; See page 77 for resistor selection.				R		
DELAY PERIOD						
See page 77 for standard ranges available						

Example: TSG-24-ARC-300—Repeat cycle, 24 VAC, external resistor adjustable from 3 to 300 seconds, UL recognized.

OPERATION

When power is applied, the OFF time begins. Upon completion of the OFF time, the load energizes and the ON time begins. Upon completion of the ON time, the load de-energizes and one cycle is complete. This OFF/ON cycling continues until the voltage is removed. THE OFF TIME ALWAYS EQUALS THE ON TIME.

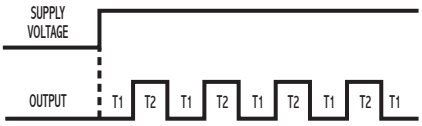

c UL us
E55826

Flasher Solid-State Output

WIRING

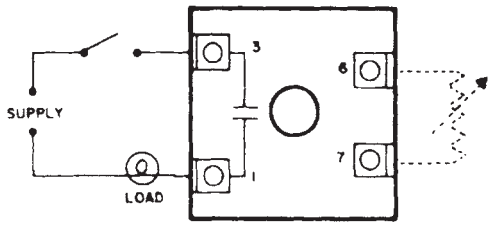

DIMENSIONS (INCHES)

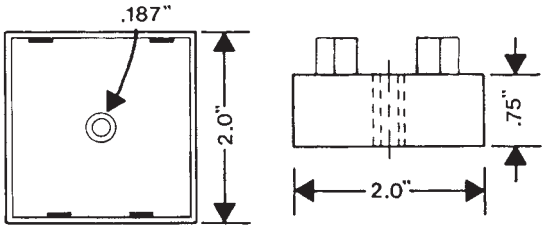

MODEL NUMBER

MODEL NUMBER	TSL		A		C	
SUPPLY VOLTAGE						
24 VAC		24				
120 VAC		120				
TYPE OF OPERATION						
Fixed				F		
External Resistor Adjustable; See page 77 for resistor selection.				R		
FLASH RATE						
75 per Minute						75
90 per Minute						90
100 to 100 Adjustable						100*

Note: * The flash rate "100" option is only available in the "R" type of operation option.

SPECIFICATIONS

OUTPUT RATING	Solid-state, SPST-N.O. 1 amp resistive; 1 amp 25VA @ 24VAC 1 amp 125VA @ 120VAC .5 amp 125VA @ 240 VAC	
SUPPLY VOLTAGE	24 or 120 VAC, 50/60 Hz; ±10%	
FALSE TRANSFER	No	
LOAD TYPE	Resistive or incandescent only	
FLASH RATE	Factory preset (fixed) or external resistor adjustable from 10 to 100 flashes per minute.	
TEMPERATURE RATING	Operate	32° to 131°F (0° to +55°C)
	Storage	-49° to 185°F (-45° to +85°C)
TERMINATIONS	1/4" quick disconnect terminals	
WEIGHT	NET: 1.28 oz Shipping: 1.6 oz.	

E55826

Energy Conservation Timer
Solid-State Output

OPERATION

When voltage is applied to the input, the internal relay picks up and the time delay begins regardless of the position of the control switch. With the switch in the open position, when voltage is applied, the timer will complete its time delay period and the internal relay will drop out if the switch is not closed before the completion of the time delay period. With the switch in the closed position, when voltage is applied, the timer will complete its time delay period and the internal relay will drop out if the switch is not opened and reclosed before the completion of the time delay period. After voltage has been applied, closing of the control switch initiates the time delay period. Reset is accomplished by interrupting the supply voltage or re-closing the control switch.

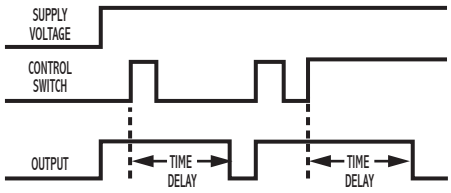

WIRING

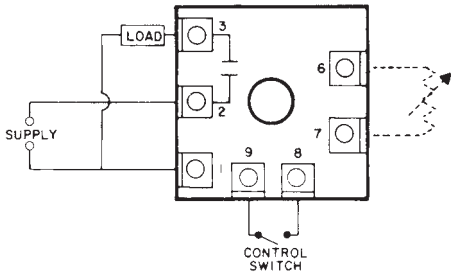

DIMENSIONS (INCHES)

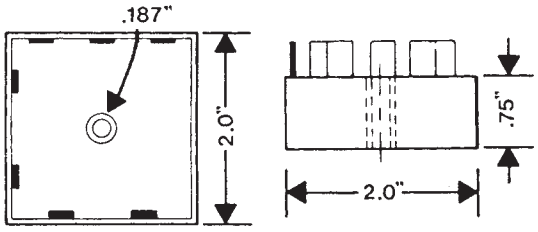

SPECIFICATIONS

TIMING RANGES	Virtually unlimited See page 77 for standard ranges available.	
OUTPUT RATING	Solid-state, SPST-N.O. 1 amp resistive; 1 amp 25VA @ 24VAC 1 amp 125VA @ 120VAC .5 amp 125VA @ 240 VAC	
TIMING TOLERANCES	Minimum Setting Maximum Setting	+0 – 20% ±10%.
REPEATABILITY	1% maximum; no first cycle effect	
RESET TIMES	Before Time Out After Time Out	100 mSEC 50 mSEC
RECYCLE TIME	40 mSEC	
SUPPLY VOLTAGE	24, 120 or 240 VAC, 50/60 Hz; ±10%	
FALSE TRANSFER	No	
REVERSE POLARITY	Yes	
ENCLOSURE	Surface mounted; totally encapsulated with a high quality epoxy for environmental protection.	
TEMPERATURE RATING	Operate Storage	32° to 131°F (0° to +55°C) -49° to 185°F (-45° to +85°C)
TERMINATIONS	1/4" quick disconnect terminals	
WEIGHT	NET: 1.28 oz Shipping: 1.6 oz.	

MODEL NUMBER

MODEL NUMBER	TSM		A		C	
SUPPLY VOLTAGE						
24 VAC		24				
120 VAC		120				
240 VAC		240				
TYPE OF OPERATION						
Fixed				F		
External Resistor Adjustable; See page 77 for resistor selection.				R		
DELAY PERIOD See page 77 for standard ranges available						

Example: TSM-120-ARC-060—Energy conservation timer, 120 VAC, external resistor adjustable from 0.6 to 60 seconds, UL recognized.

A compact version of the versatile 333 Timer, the ATC 353 is its exact functional duplicate. Packaged in a 72mm² DIN-Size housing, it occupies 40% less panel space and costs proportionately less. Modern production and assembly techniques have all but eliminated hand wiring, enhancing the reliability and life expectancy of the 353.

CONTROL VERSATILITY: The 353 operates either as a repeat cycle pulse generator or in single-cycle interval or delayed mode. You choose the kind of control action you want by installing jumpers on the terminal block. It also provides a choice of control output. Choose a standard plug-in SPDT relay or optional SPST solid-state switch module plus an independent-24VDC output signal at Terminal 16.

COMPUTER TESTED RELIABILITY: The solid-state 353 is manufactured from a series of computer-tested plug-in circuit boards and assembled virtually without hand wiring. Because it has no moving parts in its logic circuits, its life expectancy is practically unlimited. Even the load relay — the 353's only significant mechanical component — has a life expectancy of 100,000,000 operations (no load), while the optional solid-state switch module has virtually unlimited life expectancy. As a result, the 353 achieves an overall reliability that surpasses even the high level achieved by previous Shawnee timers.

SAVE 40% IN PANEL SPACE AND COST: Packaged in a 72mm² DIN-size housing, the 353 occupies 40% less panel space than previous IC timers. Modern production and assembly techniques have substantially reduced manufacturing costs and resulted in a 45% cost saving.

WIDE RANGE: Each Shawnee II 353 timer covers the overall span of 0.01 SEC to 999.9 MIN in four field-convertible ranges.

EASY TO SET: The Shawnee timer is easily and accurately set even with work gloves on. Push any of its four toggle levers in any sequence until the number you want appears above it. You can decrease as well as increase each number by pushing the levers up or down. You can change the setting at any time, even during a cycle.

NOISE IMMUNITY: The 353 does not have to be shielded: its transformer power supply, full-wave bridges, buffered logic and other design characteristics render it immune to the electrical noise that is sometimes encountered in industrial environments thus eliminating false starts and reset due to voltage spikes.

CYCLE PROGRESS INDICATION: The Shawnee 353 indicating timer provides cycle progress indication on a four-digit display located immediately above the digital setting number wheels.

OUTSTANDING REPEAT ACCURACY: Unsurpassed among industrial timers regardless of cost, the Shawnee 353 has a repeat accuracy of ± 10 milliseconds on any setting within its overall range of 999.9 MIN, even in the face of wide swings in temperature or voltage and regardless of the amount of reset time between cycles.

PLUG-IN AND DUST-TIGHT: All 353 timers feature true plug-in design and are dust-tight from the front of panel.

E48329

Shawnee II Digital Programmable Timer

MODEL NUMBER

MODEL NUMBER	353C			30	P	
RANGE						
999.9 SEC		346				
999.9 MIN		347				
99.99 SEC		351				
99.99 MIN		352				
Special		000				
VOLTAGE & FREQUENCY						
120/60			A			
240/60			B			
120/50			C			
240/50			D			
ARRANGEMENT						
With Display (On Delay)				30		
FEATURES						
Basic plug-in unit					P	
Standard unit						X
Special						K

ACCESSORIES:

Surface mounting bracket kit	353-260-27-00
Retrofit kit	305-265-61-70

The 353C Directly Replaces 353B & 353A

Functional Replacement for the 333 Timer

SPECIFICATIONS

RANGES	Four field convertible ranges 0.01 - 99.99 SEC 0.01 - 99.99 MIN 0.1 - 999.9 SEC 0.1 - 999.9 MIN	
TIMING MODES	Single cycle (interval or delayed) and repeat cycle pulse generator.	
VOLTAGE REQUIREMENTS		
START/RESET SIGNAL	**VOLTAGE REQUIREMENTS**	
	Positive Polarity	Ready at 4.5V min. Reset at 1.0V max.
	Negative Polarity	Ready at 3.0V min. Reset at 1.0V max
	Max. Continuous Input	40V.
	Ripple Voltage	must not go below minimum required
	AC Line Voltage Input Impedance	5K ohms.
	RESET TIME	
	Circuit Reset	1 mSEC max.
	Relay Drop-Out	20 mSEC max.
	START SWITCH REQUIREMENTS (ISOLATED CONTACT)	
	Switch Rating	10mA 30V
	Min Open Resistance	1 megohm
	Max. Closed Resistance	20K ohms
	LATCHING MODE OPERATION (INTERVAL ONLY)	
	Min. Duration Start Signal	50 µSEC
	Max. Duration Start Signal	continuous
	Reset	when signal is removed
TEMPERATURE RATING	32° to 140°F (0 to 60°C)	
POWER REQUIREMENTS	120V	95 to 132V, 50/60 Hz inrush – 0.4 A running – 0.04 A
	240V	190 to 264V, 50/60 Hz inrush – 0.2 A running – 0.02 A ±10%

DC POWER SUPPLY OUTPUT (TERMINAL 7)	Voltage	-24V ± 10%
	Current	40 mA max.
DC OUTPUT (TERMINAL 16)	Voltage	ON – -24V ± 10% OFF – -1V or less
	Current	with relay–5 mA max. without relay–40 mA max
	Impedance	on – 10 ohms max. off – 10K ohms.
PULSE GENERATOR OPERATION	PULSE ON TIME (with relay): 80 mSEC ± 20 mSEC (may be shortened or lengthened by installing a resistor or capacitor, respectively, across Terminals 4 and 11; see Operation Section for details.)	
LOAD RELAY	LIFE 100,000,000 operations (no load.) CONTACT RATING: 5A @ 120 VAC Resistive, 5A, 30 VDC Resistive	
REPEAT ACCURACY	±0.01 SEC on all ranges.	
MINIMUM SETTING	99.99 SEC or MIN ranges: 0.01 SEC or MIN, respectively. 999.9 SEC or MIN ranges: 0.1 SEC or MIN, respectively.	
MOUNTING ACCESSORIES	Standard	Hardware is provided to mount timer so that it is dust-tight from front of panel.
	Optional	Surface mounting without and with front facing terminals. (See Accessory section of catalog)
WEIGHT	NET: 1 lb., 7 oz. Shipping: 2 lbs.	

DIMENSIONS (INCHES)

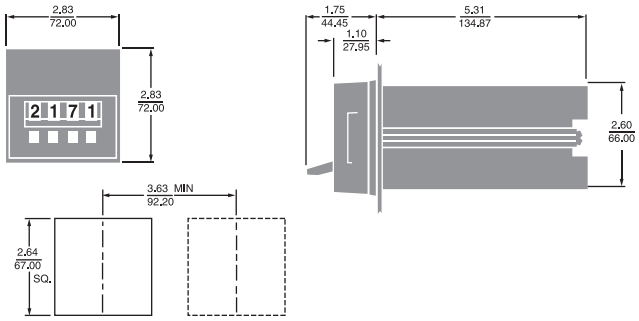

PANEL CUTOUT
SHOWING DISTANCE BETWEEN
ADJACENT CUTOUTS.

WIRING

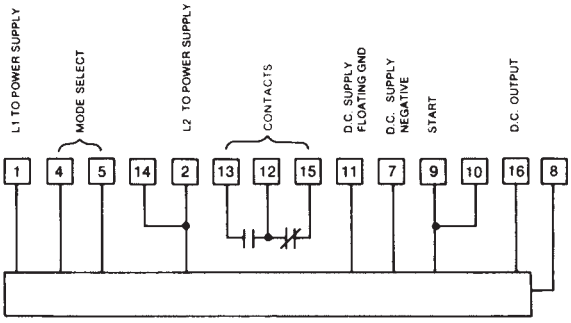

TERMINAL WIRING

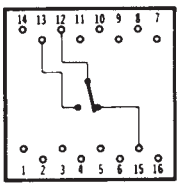

OPERATION

The Shawnee 353 operates on a digital logic circuit with three main elements: a clock which uses utility line frequency of 50 or 60 Hz as its time base; a read-only-memory (ROM) whose output is set by the timer's digital setting number wheels; and a comparator that continuously examines the outputs of the clock and ROM.

When power is applied (start signal on), the clock begins to count each cycle of the utility line frequency. Translating this count into hundredths of a second, the clock accumulates it and feeds it continuously to the comparator. When clock output exactly equals the output of the ROM, the 353 times out.

At that instant, the clock turns itself off automatically.

At the same instant, the 353 generates one type of control action or another, depending on how it is wired.

When the 353 is wired for interval operation, the timer's output device (either the standard SPDT relay or the optional SPST switch module) is energized from the start to the end of the time cycle; so is the -24 VDC output at terminal 16.

When the 353 is wired for delayed control, the output device is energized at the end of the cycle and remains on until the timer is reset; so is the -24 VDC output.

When the 353 is wired as a repeat cycle pulse generator, the output device and the DC signal are both off until the end of the cycle, at which time they are both on for about 80 mSEC. The length of the pulse is included in the time cycle: the cycle runs from the start of one pulse to the start of the next. The 353 automatically starts a new cycle immediately after reset.

The duration of the standard output pulse generated by the 353 is 80 mSEC (±20 mSEC), but it can be easily lengthened or shortened by using a capacitor or resistor across terminals 4 and 11. To shorten the output pulse, the size of the resistor (fixed or variable) is calculated as follows:

Where: t = time in milliseconds (± 25%)

R = resistance in megohms

(must be at least 0.2 megohm.)

$$\frac{2.2t - 2.64}{80 - t} = R$$

To lengthen the output pulse, the size of the capacitor is calculated as follows:

Where: T = time in seconds (± 25%)

C = capacitance in microfarads.

$$\frac{T - 0.08}{1.6} = C$$

NOTE Observe Polarity: (+) Terminal of the capacitor goes to 11, (–) Terminal to 4. To start from AC voltage, jumper terminals 8-9 and 4-11 and start with AC power at terminals 1 and 2.

TYPICAL INSTALLATION

DELAYED MODE — Sustained* start

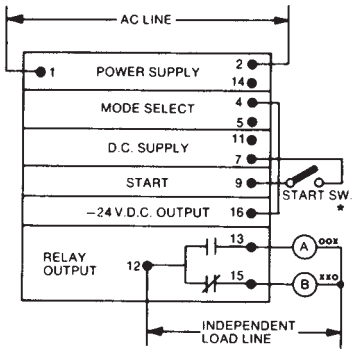

INTERVAL MODE — Sustained* or momentary** start

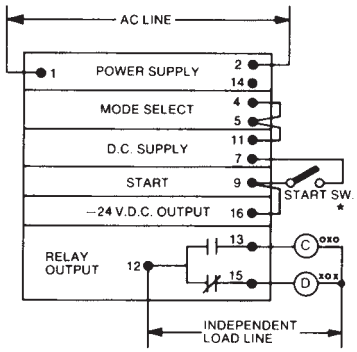

INTERVAL MODE — Sustained* start

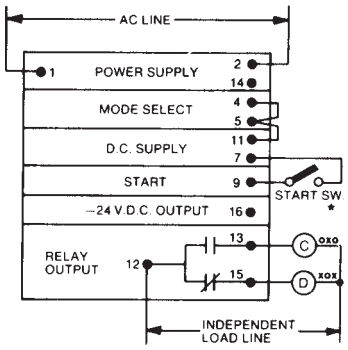

REPEAT CYCLE PULSE GENERATOR — Uninterrupted start signal

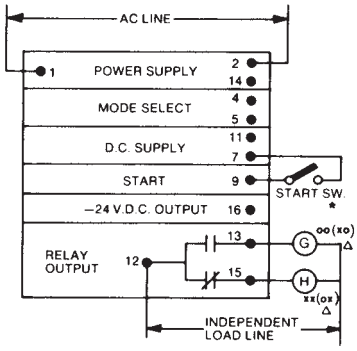

*Start switch must be closed — or DC start signal must be on — for entire cycle. Timer resets when start switch opens or DC start signal turns off. To start from DC voltage, apply external ground on 11 and start signal on 9.

**Start switch may be closed — or DC start signal may be on — for less that the entire cycle. Timer resets at end of cycle.

E48329

Shawnee II Digital Reset Timer

A compact version of the 335 Timer, the ATC 355 is its exact functional duplicate, packaged in a 72mm² DIN-Size housing, it occupies 40% less panel space and costs proportionately less. Modern production and assembly techniques have all but eliminated hand wiring, enhancing the reliability and life expectancy of the 355.

COMPUTER TESTED RELIABILITY: The Solid-State 355 is manufactured from a series of computer-tested plug-in circuit boards and assembled virtually without hand wiring. Because it has no moving parts in its logic circuits, its life expectancy is practically unlimited. Even the load relay — the 355's only significant mechanical component — has a life expectancy of 100,000,000 operations (no load). As a result, the 355 achieves an overall reliability that surpasses even the high level achieved by previous Shawnee timers.

CYCLE PROGRESS INDICATION: The Shawnee indicating timer provides cycle progress indication on a four-digit display located immediately above the digital setting number wheels.

PLUG-IN AND DUST-TIGHT: All 355 timers feature true plug-in design and can be replaced in seconds without disturbing the housing or disconnecting the wiring. The dial assembly is gasketed so that the timer body is dust-tight from the front of panel.

WIDE RANGE: Each Shawnee 355 timer covers the overall span of 0.01 SEC to 999.9 MIN in two field-convertible ranges. The 355 indicating timer also offers two additional field-convertible ranges of 0.1-999.9 SEC or MIN

EASY TO SET AT ALL TIMES: The Shawnee timer is easily and accurately set even with work gloves on. Push any of its four toggle levers in any sequence until the number you want appears above it. You can decrease as well as increase each number by pushing the levers up or down. You can change the setting at any time, even during a cycle.

SAVE 40% IN PANEL SPACE AND COST: Packaged in a 72mm² DIN-size housing, the 355 occupies 40% less panel space than previous IC timers. Modern production and assembly techniques have substantially reduced manufacturing costs and resulted in a 45% cost saving.

OUTSTANDING REPEAT ACCURACY: Unsurpassed among industrial timers regardless of cost, the Shawnee has a repeat accuracy of ±10 milliseconds on any setting within its overall range of 999.9 MIN, even in the face of wide swings in temperature or voltage and regardless of the amount of reset time between cycles.

NOISE IMMUNITY: The 355 does not have to be shielded: its transformer power supply, full-wave bridges, buffered logic and other design characteristics render it immune to the electrical noise that is encountered in typical industrial environments

MODEL NUMBER

MODEL NUMBER	355C			30	P	
RANGE						
999.9 SEC		346				
999.9 MIN		347				
99.99 SEC		351				
99.99 MIN		352				
Special		000				
VOLTAGE & FREQUENCY						
120/60			A			
240/60			B			
120/50			C			
240/50			D			
ARRANGEMENT						
With Display (On Delay)				30		
FEATURES						
Basic plug-in unit					P	
Standard unit						X
Special						K

ACCESSORIES:

Surface mounting bracket kit	353-260-27-00
Retrofit kit	305-265-61-70

The 355C Directly
Replaces 355B & 355A

Functional Replacement
for the 335 Timer

SPECIFICATIONS

RANGES	0.01 - 99.99 SEC	
	0.01 - 99.99 MIN	
	0.1 - 999.9 SEC	
	0.1 - 999.9 MIN	
	Four field-convertible ranges	
TIMING MODES	Single Cycle	interval or delay
	Repeat Cycle	pulse (fixed at approx. 50 mSEC)
CYCLE PROGRESS INDICATOR	4 digit, 0.3 inch, high intensity, blue display	
REPEAT ACCURACY	±0.01 SEC on all ranges	
RESET TIME	75 milliseconds	
MINIMUM SETTING	99.99 SEC of MIN ranges: 0.01 SEC or MIN, respectively	
	999.9 SEC or MIN ranges: 0.1 SEC or MIN, respectively	
LOAD RELAYS	Number	two, one instantaneous and one delayed; both plug-in DPDT
	Operate Time	20 mSEC, max.
	Release Time	instantaneous — 20 mSEC, max. delayed — 75 mSEC, max.
	Contact Rating	5A @ 120 VAC Resistive, 5A, 30 VDC Resistive
	Life	100 million operations (no load)
TEMPERATURE RATING	32° to 140°F (0 to 60°C)	
POWER REQUIREMENTS	120V	95-132V at 50 or 60 Hz inrush — 0.2 A running — 0.04 A
	240V	190-264V AT 50 OR 60 Hz inrush — 0.1 A running — 0.02 A
	Clock Input Voltage	95-132V rms (120V Model) 190-264V rms (240V Model)
	Current	20 mA max.
	Frequency	0 to 1000 Hz (sinusoidal)
TERMINALS	16 screw terminals accessible at rear; integral wiring diagram on housing	
HOUSING	Plug-in design; completely gasketed, dust-tight when panel-mounted	
MOUNTING ACCESSORIES See Accessory section of catalog	Standard	Hardware is provided to mount timer so that it is dust-tight from front of panel
	Optional	Surface mounting without and with front-facing terminals)
WEIGHT	NET: 1 lb., 7 oz. SHIPPING: 2 lbs	

OPERATION

The Shawnee 355 operates on a digital logic circuit with three main elements: a clock which uses utility line frequency of 50 or 60 Hz as its time base; a read-only-memory (ROM) whose output is set by the timer's digital setting number wheels; and a comparator that continuously examines the outputs of the clock and ROM.

When power is applied (start signal on), two things happen simultaneously; the instantaneous DPDT relay is energized transferring both sets of contact, and the clock circuit begins to count each cycle of the utility line frequency. Translating this count into hundredths of a second, the clock accumulates it and feeds it continuously to the comparator. When clock output exactly equals the output of the ROM, the comparator causes the 355C to time out.

At this point, (1) the DPDT delay relay is energized, immediately transferring both sets of contacts and (2) the clock turns itself off automatically. Since the clock stops counting even if the start signal remains on, it is not necessary to tie up one of the 355C's delayed contacts to do this job.

To reset the Shawnee 355, power must be removed from terminal 1 (L1) for 75 milliseconds or more. The 355 operates in the On-Delay mode only, always resetting whenever there is a power outage and starting a new cycle when power is restored.

CYCLE PROGRESS INDICATION: When the timer is in the reset condition, the LED display is blank. During the timing cycle, the display counts up from zero, thus always indicating the amount of time that has elapsed since the start of cycle. At time-out, the display shows total elapsed time and exactly equals the numbers on the digital setting wheels.

		Switching Sequence: Assumes a sustained closed start signal (i.e. longer than the setting on the digital display.)		
RELAY	CONTACTS	Before Start	During Timing	End of Cycle
Instantaneous	14-9/6-8	GRAY	BLACK	BLACK
	14-10/6-7	BLACK	GRAY	GRAY
Delayed	11-12/4-5	BLACK	BLACK	GRAY
	11-13/4-3	GRAY	GRAY	BLACK

BLACK-Circuit Closed GRAY-Circuit Open

TYPICAL INSTALLATIONS

- PS POWER SUPPLY
- CLK CLOCK
- INDEPENDENT LOADS
- DEPENDENT LOADS
- MOMENTARY STARTING CONTACT
- SUSTAINED STARTING CONTACT
- X LOAD ENERGIZED
- O LOAD DE-ENERGIZED

All timers shown in "before start" position. Diagrams shown with power off unless otherwise marked. Maximum load current through any load carrying contact is 5 amperes. Pilot lights leads are brought out to terminal block. Pilot light can be wired to show practically any desired function timer energized, cycle running instantaneous or delayed switch closed. etc.

DELAYED CONTACTS
Contacts transfer simultaneously when unit "times out" and all digits are zero.

INSTANTANEOUS CONTACTS
Contacts are transferred when power supply is energized, transferred back as shown when de-energized.

SUSTAINED START

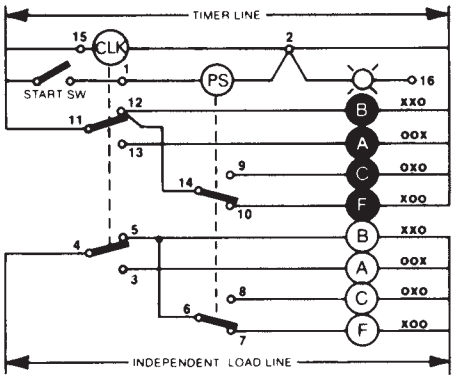

MOMENTARY START

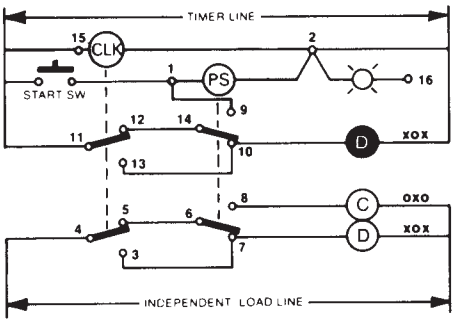

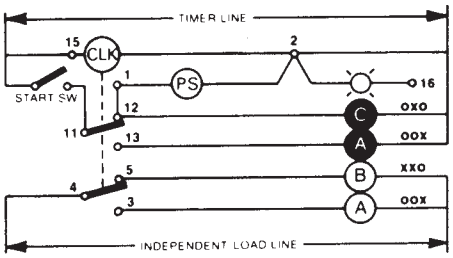

DIMENSIONS (INCHES)

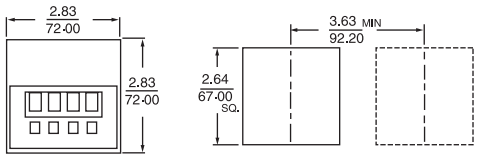

PANEL CUTOUT
SHOWING DISTANCE BETWEEN
ADJACENT CUTOUTS.

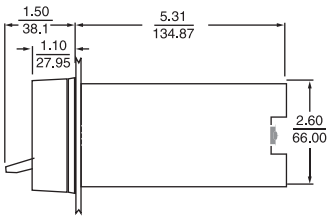

WIRING

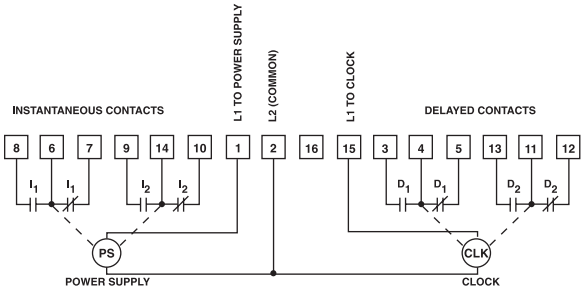

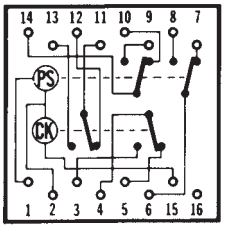

TERMINAL WIRING

The ATC 365 is the latest generation in the popular long-ranger timer series. The microprocessor-based digital timer is equipped with three rotary knobs for setting and adjustment of the Preset. The Preset can be any three-digit value from .01 SEC to 999 HR. The Decimal and Range are switch selectable. The high-intensity blue vacuum fluorescent display is DIP switch selectable to Timeup or Timedown. Two heavy-duty 7A DPDT relays provide instantaneous, interval or delayed output control. Plug-in panel mounting allows easy replacement without the removal of field wiring.

COMPUTATION: Through its internal microcomputer, the 365 keeps track of the set point throughout the time cycle. Whenever there is a change in set point, even during a cycle, it instantly re-computes the time remaining and accurately determines time-out. This unique capability is especially valuable in the time-down modes as it allows you to shorten a cycle without loss of accuracy.

POSITIVE RESET TIME AND PULSE LENGTH: Digitally clocked by the microcomputer, the 365's reset time is consistently of the same duration, regardless of variations in line voltage, power supply, or time cycle. As a result, the 365 is not subject to false reset from momentary power interruptions (less than 30 mSEC). When the 365 operates in repeat-cycle mode, the output pulse is also digitally clocked so that both its occurrence and duration are consistent.

WIDE RANGE: Each 365 Long-Ranger covers the overall span of 0.01 SEC to 999 HR, in nine switch-selected ranges of 0 to 9.99, 99.9 or 999 SEC, MIN or HR. The timer can be optimized within any selected range simply by removing appropriate selector knobs (e.g. with the timer in the 9.99 SEC range, you can obtain a tamper-proof span of 0.99 by setting the left selector at 0 and removing the knob).

PROGRAMMABLE DISPLAY: Depending on the position of an internal jumper, the 365's three-digit cycle progress display will time UP to or DOWN from the set point; after time-out, it will either STOP or GO (i.e. display the time elapsed after time-out). To the right of the three-digit display, a timing bar "▬" blinks once per second during the timing cycle and rapidly after timeout. At left, a marker "▼" turns on when the delayed relay is energized.

NOISE IMMUNITY: The 365 has formidable defenses against noise: transformer power supply, full-wave bridges, buffered logic. Furthermore its microcomputer detects; and rejects; noise pulses that manage to penetrate its defenses. No industrial timer has ever offered greater noise immunity.

RELIABILITY AND RUGGEDNESS: ATC firmly believes that no industrial timer has ever achieved a higher level of reliability and ruggedness. The 365's electronic components have no moving parts and are assembled, virtually without hand wiring, from computer-tested circuit boards. Its few mechanical components have been selected for reliable service; the two load relays have a life expectancy of 100,000,000 operations and heavy-duty contacts rated at 7 amps; and the three rotary set point selector switches exhibit extremely low wear.

COMPACT, PLUG-IN AND DUST-TIGHT: Packaged in a 72mm^2 DIN housing, the 365 occupies 40% less panel space than conventional timers. It is a true plug-in timer that can be replaced in seconds without disturbing housing or wiring. The 365 is also fully gasketed and O-ring sealed to be dust tight.

SELF DIAGNOSTICS: The time will display "FAIL" anytime there is a problem or the knobs are in between digits.

E48329

LONG-RANGER Timer

DIMENSIONS (INCHES/MILLIMETERS)

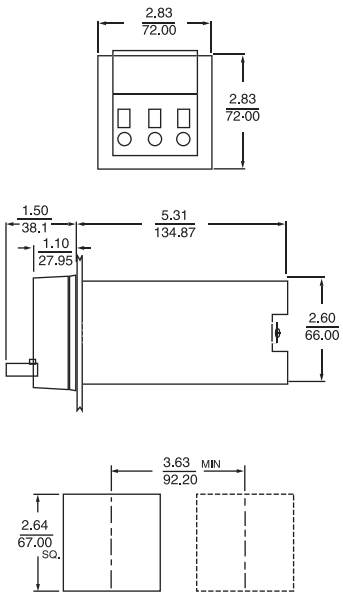

PANEL CUTOUT
SHOWING DISTANCE BETWEEN
ADJACENT CUTOUTS.

The 365C Directly
Replaces 365A & 365B

SPECIFICATIONS

MODELS	Arrangement "30," with digital display available for On-Delay operation at 120, 240 or 24 VAC; and 24 VDC	
RANGES	Switch-selectable ranges of 0-9.99, 0-99.9 and 0-999 SEC, MIN or HR	
TIMING MODES	Single Cycle	interval or delayed
	Repeat Cycle	pulse-clocked at 50 to 80 mSEC (will be constant for a given unit)
RESET TIME	Clocked at 60 mSEC	
DISPLAY CYCLE PROGRESS	3 digit display, 0.3 inch, high-intensity, blue programmable: DOWN and STOP, DOWN and GO, UP and STOP or UP and GO	
	TIME-OUT ▼ display (left); energized at time-out.	
TIMING BAR	display (right); blinks once per second during cycle, rapidly after time-out.	
CLOCK INPUT VOLTAGE MODEL (terminal 15)	120VAC Model	95-132VAC, 10mA max. current at 120V
	240VAC Model	190-264VAC, 10 mA max. current at 240V
	24VAC Model	19.2-26.4VAC, 20 mA max. current at 24V
	24VDC Model	19.2-26.4VDC (5% ripple), 5 mA max. current at 24V
TEMPERATURE RATING	32 to 122°F (0 to 50°C)	

POWER REQUIREMENTS	120 VAC	95-132 VAC, 50 or 60 Hz. Inrush — .3A. Running 0.06A at 120 VAC
	240 VAC	216-264 VAC, 50 or 60 Hz. Inrush — .15A. Running — 0.03A at 240 VAC
	24 VAC	19.2-26.4 VAC, 50 or 60 Hz Inrush — 1A. Running — 0.25A at 24 VAC
	24 VDC	19.2-26.4 VDC, 5% ripple Running — .120A AT 24 VDC
LOAD RELAY	Number	one instantaneous and one delayed
	Type	DPDT, Form C.
	Operate Time	P 13 mSEC, max.
	Release Time	10 mSEC, max.
	Contact Ratings	7A at 120, 240 or 24 VAC 1/6 HP
	Life	100 million operations (no load)
REPEAT ACCURACY	± .001% ± .010 SEC of setting	
SETTING ACCURACY	±.01% + .030 SEC of setting	
TERMINALS	16 screw terminals accessible at rear	
HOUSING	72mm² DIN size; plug-in design; fully gasketed, dust and water-tight in panel mounted installations	
	Standard	hardware is provided for front-of-panel mounting.
	Optional	Surface-mounting brackets with front-facing terminals.
WEIGHT	NET: AC 1 lb., 6 oz. Shipping: AC 2 lbs. DC 14 oz. DC 1 lb., 8 oz.	

MODEL NUMBER

MODEL NUMBER	365C				P	
RANGE						
0 to 9.99, or 99.9 or 999 SEC, MIN, or HR		300				
Special		000				
VOLTAGE & FREQUENCY						
24 VDC			N			
120 VAC 50-60 Hz			Q			
240 VAC, 50-60 Hz			R			
24 VAC, 50-60 Hz			T			
Special			K			
ARRANGEMENT						
With display, ON-delay/Time up or down and stop (reset on power failure)				30		
Time up or down and go				50		
FEATURES						
Basic plug-in unit					P	
Standard unit						X
Special						K

ACCESSORIES:

Surface mounting bracket kit	353-260-27-00
Retrofit kit	305-265-61-70

WIRING

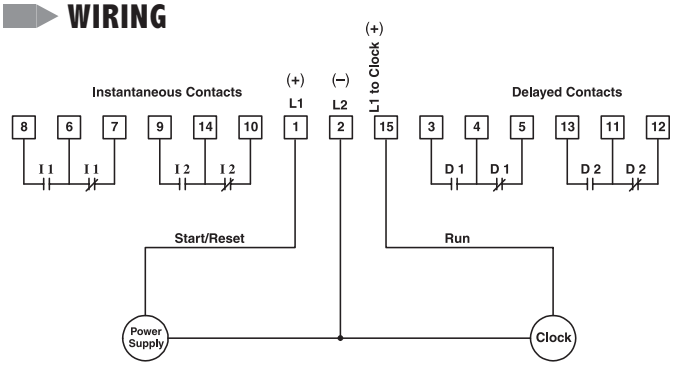

TERMINAL WIRING

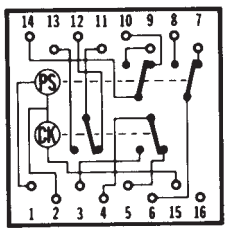

OPERATION

As soon as power is applied to terminals 1 & 2 of the timer, the instantaneous relay is energized and changes the states of its associated contacts (8-6-7 & 9-14-10). The timer then looks for terminal 15 (the clock terminal) to receive power. When terminal 15 is powered, the internal clock circuit is enabled and the timer starts to time. When the internal clock time equals the time set on the front face, the delayed relay energizes and changes the states of its associated contacts (3-4-5 & 13-11-12). The timer is reset by removing power from terminal 1 for at least 60 msec. At reset, both relays revert back to their shelf (without power) state.

SPECIAL NOTE FOR UNITS WITHOUT DISPLAYS: On nondisplay units, terminals 1 & 15 are jumpered together internally. As soon as power is applied, the instantaneous relay energizes and the timer starts to time immediately.

DISPLAY INFORMATION: The digital display can be set to time up or down by simply moving a DIP switch on the circuit board.

MODE:

- 30PX STOP (Time up/down to time set, transfer delayed relay, and stop timing).
- 50PX GO (Time up/down to time set, transfer delayed relay, and continue timing until unit is reset).

TYPICAL INSTALLATIONS

KEY SYMBOLS

POWER SUPPLY
CLOCK
INDEPENDENT LOADS
DEPENDENT LOADS
MOMENTARY STARTING CONTACT
SUSTAINED STARTING CONTACT
LOAD ENERGIZED
LOAD DE-ENERGIZED

All timers shown in "before start" position. Diagrams shown with power off unless otherwise marked. Maximum load current through any load carrying contact is 5 amperes. Pilot lights leads are brought out to terminal block. Pilot light can be wired to show practically any desired function timer energized, cycle running instantaneous or delayed switch closed. etc.

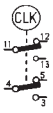

DELAYED CONTACTS
Contacts transfer simultaneously when unit "times out" and all digits are zero.

INSTANTANEOUS CONTACTS
Contacts are transferred when power supply is energized, transferred back as shown when de-energized.

SUSTAINED START

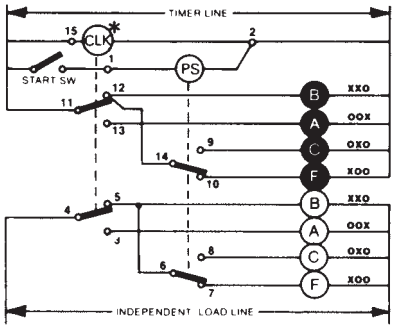

MOMENTARY START

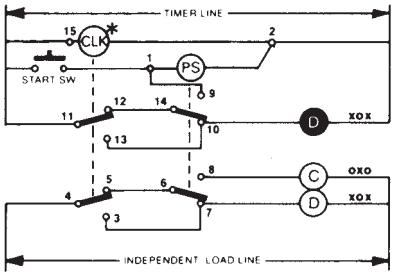

REPEAT CYCLE PULSE

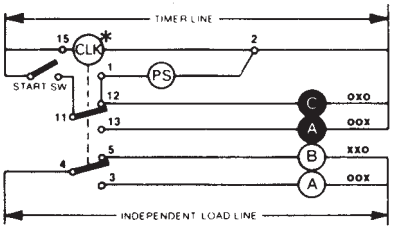

E48329

Long-Ranger Computing Timer with Memory

- EEPROM Memory
- Magnetic Latching Relay
- Delayed & Instantaneous DPDT Contacts
- Switch Selectable SEC, MIN or HR Ranges
- Nine Ranges 0 to 9.99, 99.9 or 999
- High Accuracy & Noise Immunity
- Easy Plug-In Housing
- High Intensity Blue Fluorescent Display
- Fully Gasketed and O-ring sealed to be dust tight
- Timeup or Timedown Display Operation
- 50 or 60 Hz Operation Self-Adjusting

Packaged in a 72mm² DIN housing, the ATC 365 is a true plug-in timer that can be replaced in seconds without disturbing the mounting housing or field wiring. Machine and process downtime is kept to a minimum. The 365M is also fully gasketed and O-ring sealed to be dust tight.

WIDE RANGE: Each 365 timer covers the overall span of 0.01 SEC to 999 HR, in nine switch-selectable ranges of 9.99, 99.9, or 999 SEC, Min, or HR.

EASY-TO-ADJUST PRESET: ATC's unique three rotary switches for easy setting and adjustment of the preset time is an industry standard. The switches can be adjusted anytime, even during a timing cycle. The timer is constantly scanning the preset setting and instantly re-computes the time cycle if a preset change is detected. This is especially valuable in the Timedown mode allowing you to shorten or abort the current time cycle without the removal of power.

SELF-CALIBRATING: The microprocessor automatically calibrates the timer for 50 or 60Hz power operation, there are no switches or jumpers to set.

PROGRAMMABLE DISPLAY: An internal DIP switch can be set for Timeup or Timedown and Stop display operation on the Arrangement 30 model. The Arrangement 50 model can be set for Timeup or Timedown and go. There is a horizontal timing bar " " which appears to the right of the display and blinks once per second during timing and rapidly at time-out. At left, a timed out symbol " " blinks after time-out indicating when the magnetic delayed relay is latched.

MAGNETIC LATCH RELAY: The 365 utilizes a unique magnetic latch delayed relay which energizes, latches, at time-out. Once latched it will not unlatch even with power removed or the unit is unplugged from the housing. It will only unlatch when power is momentarily applied to the Reset, terminal 16.

NON-VOLATILE MEMORY: An EEPROM memory chip to retain the time value during a loss of power and continues timing when power is restored. No battery is required.

OPERATION

Arrangement 30 & 50 Models

When power is applied to terminals 1 & 2 and 15 of the timer, the instantaneous relay is energized and its contacts change state. The timer starts timing, indicated by the display. The timing bar " ▬ " blinks slowly and the digital display indicates elapse time (Timeup & Stop) or time remaining (Timedown & Stop).

When the preset value is reached, the display stops, the timing bar blinks rapidly, the triangular timed-out symbol " ▼ " blinks, and the delayed relay latches and its contacts change state. The timer remains in this timed-out condition until reset by applying power to the Reset terminal 16 for at least 60 msec. At reset, both relays revert back to their shelf state (without power).

Note 1: The delayed relay is a magnetic latch relay and once latched it will not unlatch even if power is removed or the unit is unplugged from the housing. It will only unlatch when power is momentarily applied to the Reset terminal 16.

DIMENSIONS (INCHES/MILLIMETERS)

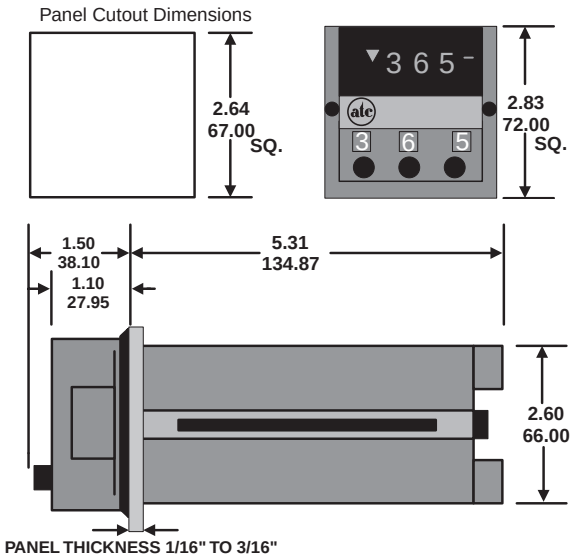

SPECIFICATIONS

MODELS	Choice of two standard 120 VAC models Each model available in 240 VAC or 24 VAC	
	365M300Q30PX	Timeup & Stop or Timedown & Stop, with display.
	365M300Q50PX	Timeup & Go or Timedown & Go, with display.
RANGES	Nine (9) Switch-Selectable ranges 0 - 9.99, 0 - 99.9, and 0 - 999 SEC, MIN, or HR	
MEMORY RETENTION	100,000 read/write cycles	
RESET TIME	Guaranteed not to reset <20 mSEC Typical reset = 40 mSEC Guaranteed to always reset >60 mSEC	
DISPLAY	Cycle Progress 3-digit high-intensity blue VF display, 0.3 inch Timing Bar: " ▬ " display; blinks once per second during timing, rapidly after time-out.	
	Timed-Out Symbol: " ▼ ", blinks after time-out, blinks when latch relay is latched	
LOAD RELAYS	Type	DPDT, Form C
	Contact Rating	7 Amps @ 120 VAC, or 1/6HP @ 240 VAC
	Operate Release Time	10 mSEC max.
	Life	10 million operations (no load)
TEMPERATURE RATING	32 to 122°F (0 to 50°C)	
POWER REQUIREMENTS	120 VAC	50 or 60 Hz (10%, -20%) Running <100mA @120VAC
	240 VAC	50 or 60 Hz (10%, -20%) Running <50mA @ 240 VAC
	24 VAC	50 or 60 Hz (10%, -20%) Running <300mA @ 24 VAC
CLOCK INPUT (Terminal 15)	120 VAC	95 - 132 VAC, 10 mA max. current @ 120V
	240 VAC	90 - 264 VAC, 10 mA max. current @ 240V
	24 VAC	19.2 - 26.4 VAC, 20 mA max. current @ 24V
TERMINALS	16 Screw (6-32) terminals with saddle clamps accessible at rear	
HOUSING	72mm² DIN size, Plug-in design, fully gasketed dust tight when panel mounted. Panel mounting bracket included.	
WEIGHT	Net: 1 lb. 6 oz Shipping: 2 lbs.	

WIRING

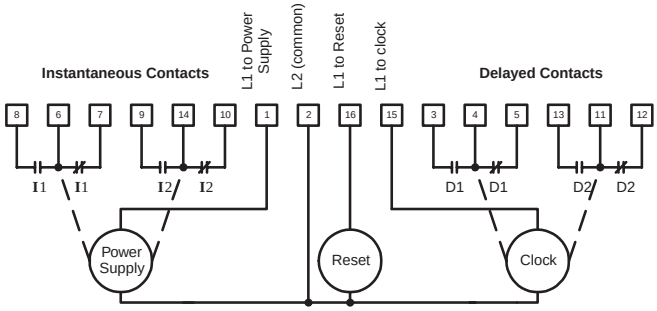

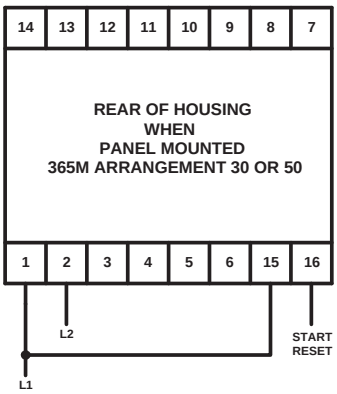

MODEL NUMBER

MODEL NUMBER	365M				P	
RANGE						
0 to 9.99, or 99.9 or 999 SEC, MIN, or HR		300				
Special		000				
VOLTAGE & FREQUENCY						
120 VAC 50-60 Hz			Q			
240 VAC, 50-60 Hz			R			
24 VAC, 50-60 Hz			T			
Special			K			
ARRANGEMENT						
Selectable Timeup & Stop or Timedown & Stop with Display, Standard				30		
Selectable Timeup & Stop or Timedown & Go with Display, Standard				50		
FEATURES						
Basic plug-in unit					P	
Standard unit						X
Special						K

Accessories:

Surface Mounting Bracket Kit	353-260-37-00
Retrofit Kit	305-265-61-70

C US
120 VAC Only
E48329

Timer/Counter with Memory

- EEPROM Memory
- Easy DIP Switch Setup
- Three Adjustable Presets with Internal Cycle Totalizer
- Dual LED Display with Cycle Progress
- Selectable SEC, MIN, or HRS Ranges
- Nine Timing Ranges 0 to 9.99, 99.9, 999, or HR:MIN, MIN:SEC to 99:59
- Two Counting Ranges 0 to 9999 or 10 to 99990
- Multiple Starting Options
- Dual DPDT Relays Rated at 7A @ 120 or 240 VAC
- 50-60 Hz

In the timer mode, the 385 can be programmed to cover the overall span of 0.01 SEC to 999 HR in nine ranges, and can be programmed to time in Hours:Minutes and Minutes:Seconds. In the counter mode, it can cover the overall span of 1 to 99,900 counts in two ranges.

MULTIPLE RELAY ACTIONS: The relationship between the 385's two DPDT relays, Relay 1 and Relay 2 can be programmed for any of the four modes of operation to satisfy virtually any control scheme.

MULTIPLE STARTING OPTIONS: The 385 can be easily programmed to start with a momentary or sustained start signal. The start signal can also be set for a voltage or no voltage starting condition.

NEW TIMING AND COUNTING MODES: The 385 has two new modes of operation. The flip-flop timer/counter with batch, which can be programmed to function as a flip-flop that will stop after a certain number of cycles or a time span. The other new flip-flop function is a standard flip-flop with a programmable dwell between the relays.

DISPLAY: The display is an LED dual display which can be programmed to run UP to or DOWN from the set point. The lower display shows the preset selected to view and the upper display shows the cycle progress.

NON-VOLATILE MEMORY: The 385 retains its entire program and preset time/count periods even when there is a loss of power. No batteries are required.

REAL-TIME COMPUTATIONS: The 385's microcomputer instantly recomputes time/count-out when there is a change in the set point during a cycle. This allows you to shorten a cycle without loss of accuracy.

COMPACT, PLUG-IN AND DUST-TIGHT: Packaged in a 72mm^2 DIN housing, the 385 takes 40% less panel space than conventional timers. A true plug-in design, it can be replaced in seconds without disturbing housing or wiring. Fully gasketed and sealed, it is dust tight in panel mounted installations. SETUP: Setup of the 385 is accomplished using 16 DIP switches which are located inside the unit. These DIP switches give a visual indication of how the Controller is setup, and eliminates the use of complex programming codes.

DIMENSIONS (INCHES/MILLIMETERS)

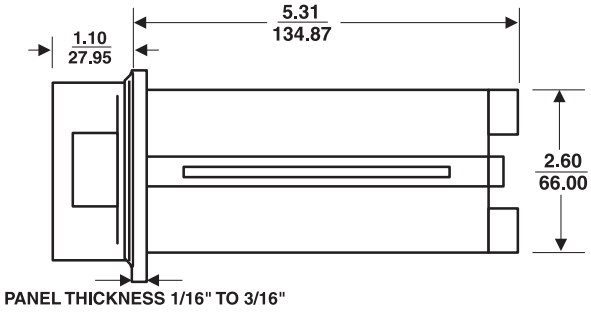

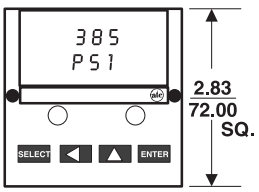

Panel Cutout Dimensions

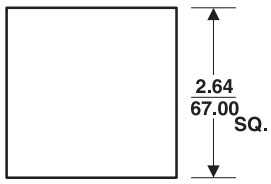

MODEL NUMBER

MODEL NUMBER	385A	500	Q	50	P	
RANGE		500				
VOLTAGE & FREQUENCY						
120 VAC 50-60 Hz			Q			
FUNCTION						
Programmable				50		
FEATURES						
Basic plug-in unit					P	
Standard unit						X
Special						K

ACCESSORIES:

Surface mounting bracket kit 353-260-27-00

PRESET SETUP

After you have setup the Controller by programming the DIP switches you must first set DIP switch (8) on the right bank to program mode, this allows you to set the presets 1, 2 and 3, in seconds, minutes, or hours. You must press the "select" button to choose the preset to select. To choose the time range you must select the timing bar "▬" and scroll to your time range. The seconds range is indicated by the timing bar in the top position, the minutes in the middle position and hours in the bottom position, when used as a counter it will display as a "C". After each selection is made you must press the "enter" button.

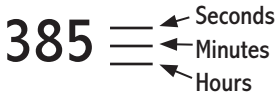

Preset 3 can be set up as a count or time input regardless if it is set up as a counter or a timer/counter in Flip-Flop with batch mode.

When setup as a standard timer (DIP switches 2 and 3 up on left bank) you may program the decimal point by scrolling past the left digit and press the up scroll button, this will place the decimal point in the 2 possible places, when finished press the "enter" button and set back to run mode. When the 385 is in the run mode the time from each preset can only be adjusted in the time range with the decimal position you chose while in the program mode.

For users who wish to have no changes allowed in the run mode – see DIP switch setup.

DIP SWITCH SETUP

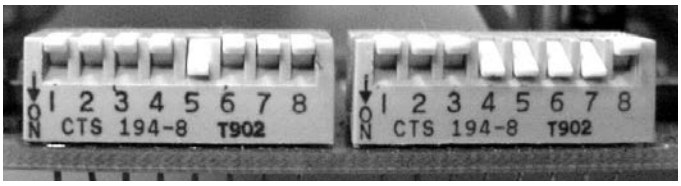

LEFT SWITCH

- **1** Up= Counter / Dn= Timer
- **2** Up= Counter or Standard Timer / Dn= Minutes:Seconds (Timer Only)
- **3** Up= Counter or Standard Timer / Dn= Hours:Minutes (Timer Only)
- **4** **5**

4	5	
Up	Up	Display preset 1 (PS1)
Up	Dn	Display preset 2 (PS2)
Dn	Up	Display preset 3 (PS3)
Dn	Dn	Display preset 4 Totalizer (PS4)

- **6** Up= Count/Time Down / Dn= Count/Time Up
- **7** Up= Changes in run mode allowed / Dn= No Changes in run mode allowed
- **8** Up= (Normal) X 1 / Dn= X 10 prescaler (Counter Only)

RIGHT SWITCH

- **1** Up= Non-Memory (reset on power failure) / Dn= Memory (no reset on power failure)
- **2** Up= Repeat Cycle / Dn= Single Cyle
- **3** Up= Momentary Start / Dn= Sustained Start
- **4** Up= Voltage Start (close to start, open to reset) / Dn= No Voltage Start (open to start, close to reset)
- **5** **6**

5	6	
Up	Up	Relay Arrangement # 1
Up	Dn	Relay Arrangement # 2
Dn	Up	Flip Flop with Dwell
Dn	Dn	Flip Flop with Batch

- **7** Up= Normal Operation / Dn= Self Test (Displays all 8's)
- **8** Up= Program Mode / Dn= Run Mode

4 MODES OF OPERATION

RELAY ARRANGEMENT 1

Relay 1 energizes before Relay 2 and remains energized when Relay 2 energizes. Both relays drop out simultaneously.

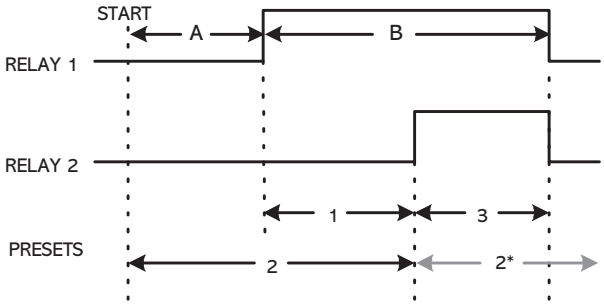

A = Preset 2 - Preset 1 B = Preset 1 + Preset 3

RELAY ARRANGEMENT 2

Relay 1 energizes before Relay 2 and drops out when Relay 2 energizes.

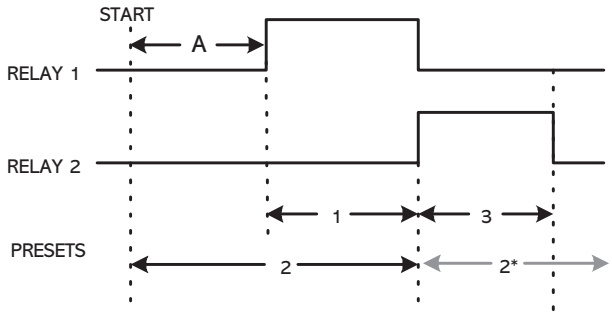

A = Preset 2 - Preset 1

FLIP FLOP TIMER OR COUNTER WITH BATCH

Relay 1 energizes at start and drops out when Relay 2 energizes. Stops at Preset 3 (Batch)

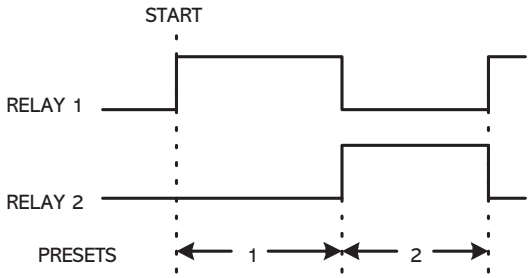

The Timer/Counter will repeat until it reaches the set count or time (Preset 3).

FLIP FLOP TIMER OR COUNTER WITH DWELL SIMILAR TO ATC (306) ACTION

Relay 1 energizes at start then has a dwell (Preset 3) Relay 2 then energizes and drops out. Cycle can repeat or cycle once.

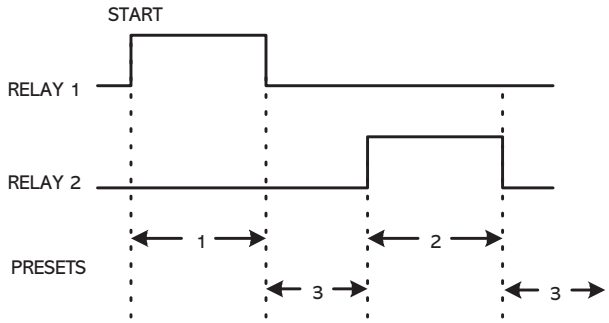

For a standard Flip-Flop timer / counter set Preset 3 to "0".

*Note: Relay arrangement 1 and 2 are shown in single cycle only, when used in repeat cycle the relationship between the relays changes, the process restarts after preset 2. The microprocessor automatically calibrates the timer for 50 or 60Hz power operation, there are no switches or jumpers to set.

OPERATION

THE DISPLAY: A highly visible dual display consists of three digits with a movable decimal point or four digits for counting. There is a horizontal timing bar "▬" which appears to the right of the upper display and blinks once per second during timing. This is very useful in showing that the timer is timing especially when the digits do not change rapidly as in the hours ranges. The timing bar blinks rapidly at time-out as well. The lower display is DIP switch selectable to display the preset time or counts for any one of the four presets, and the upper display will show that presets cycle progress.

UNDERSTANDING THE PRESETS: There are three programmable presets, Preset 1, Preset 2, and Preset 3. There is a totalizer for each mode of operation, this preset is designated Preset 4. This preset is for display only and increments a count at the end of each cycle, to reset the totalizer to zero you must go into programming mode (see DIP SWITCH SETUP) and set all four digits to zero. Once the totalizer reaches 9999 it will go to E000, the maximum count is E999 which actually has a count value of 10999. When changing or setting a preset in run mode, the display will revert back to the running time after a button has not been used for 10 seconds.

FUNCTIONS: To use the 385 you must apply power to terminals 16 and 2, terminal 1 is the start/reset or momentary start input terminal. You must also apply voltage to terminal 15 (clock/count input) to start timing or place a count, if power is removed from terminal 15 when you are timing the 385 will stop where it is and continue when power is reapplied to terminal 15. The 385 was designed to replace most of the functions of the ATC model 375. Most of these functions can be done with the relay arrangement 1 and 2 modes of operation. The arrangement 3 mode was not implemented, and most arrangement 3 applications can be done with the flip-flop mode of operation. The 385 can function as a ON-Delay or OFF-Delay timer or counter in arrangement 1, (ATC model 365, 366) to allow this, preset 1 and preset 3 must be set to 999 hours, the 385 will interpret this as infinite time and display as "INF". Preset 2 will be the set time and allow a setting of 999 hours. Relay 1 will act as an instantaneous relay, and Relay 2 as a delayed relay. The 385 when set as a standard timer operates in hours, minutes, and seconds with a movable decimal point, also the 385 can operate in hours:minutes and minutes:seconds with a maximum setting of 99:59 (see DIP SWITCH SETUP).

NEW MODES OF OPERATION: The 385 can perform as a Flip-Flop timer or counter with batch. Preset 1 is the first set time and Preset 2 is the second set time. Preset 3 is the batch, which it stops at after a certain number of flip-flop cycles up to 999, or stops at any desired time. In this mode you cannot use the hours:minutes and minutes:seconds operation. The other new mode of operation is the Flip-Flop timer or counter with dwell. This is the mode to be used when a standard Flip-Flop is needed. This new mode is designed to have a first set time (Preset 1) then a dwell time (Preset 3) followed by the second set time (Preset 2), when used in repeat cycle there is a dwell after Preset 2 also. To use as a standard Flip-Flop set the dwell time to "0". All of the modes can be set for a voltage or no voltage start, momentary or sustained start, and repeat or single cycles.

WIRING

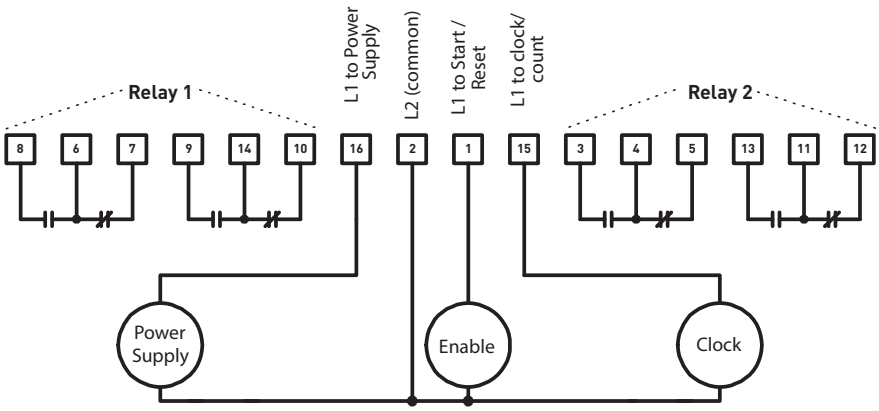

TERMINAL WIRING

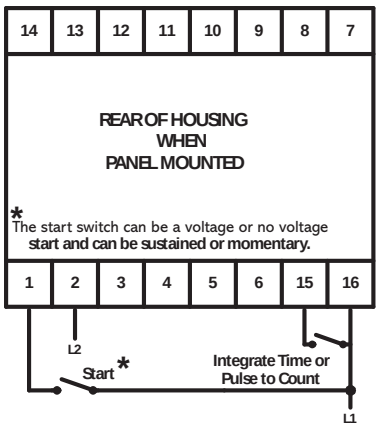

E339488

Multifunction, Multi Range Timer Counter

- Dual Display, 4 digit, 7 segment LED
- LED Status Indicator: Relay 1, Relay 2, Seconds, Minutes, Hours
- 2 Setpoints
- Programmable Input Scaling
- Down Counting for Timer, Up/Down Counting for Counter
- Batch Counting

DIMENSIONS (MILLIMETERS)

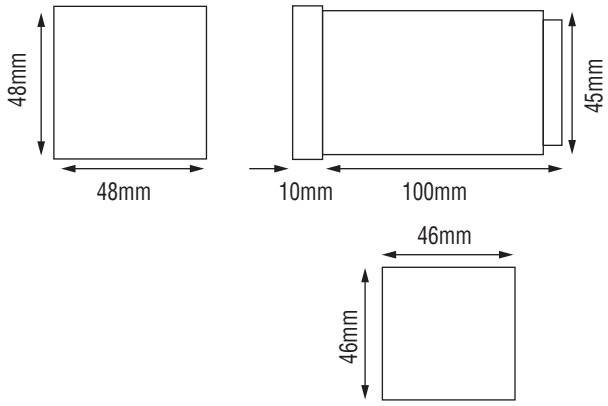

SPECIFICATIONS

SENSOR TYPE	NPN / PNP
INPUT TYPE	Voltage pulse (3 to 30 V DC) from Proximity switches, Solid state devices, Potential free contact encoder
INPUT SPEED	a) 3Hz, b) 30Hz, c) 5kHz
ACCURACY	Timer: ±0.05% of setting Counter: ± 0 counts
SCALE FACTOR	0.001 to 9.999 x 10" n= -3, -2, -1, 0, 1, 2
RESET	Front, Remote, Power Interruption
SENSOR SUPPLY	Built-in, 12V DC, 30mA (short circuit protected)
OUTPUT	2 SPST (2 NO)
RELAY RATING	5A @ 230V AC
OPERATING MODES	Timer: ON delay, Inteval, Cyclic ON first, Cylic OFF first, Batch Counter: ON delay, Interval, Auto reset, Time pulse Repeat, Batch
RANGE	Timer: 0-99.99 0-99.59 0-999.9 Counter: -999 to 9999 counts
COUNTING DIRECTION	Timer: Down Counter: Up / down
MEMORY RETENTION	Yes
SUPPLY VOLTAGE	85 to 270V AC/DC (50 / 60Hz)
POWER CONSUMPTION	5VA max
TEMPERATURE/ HUMIDITY (NON-CONDENSING)	Operating: 0 to 50°C Storage: -20 to 75°C, 95% RH
WEIGHT	6 oz.
PROTECTION LEVEL	IP65 for faceplate

TERMINAL CONNECTIONS

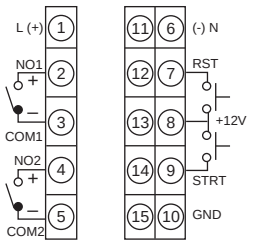

Cable Size (AWG): 13; Stud Hole for Lug (inch): 0.137 ; Tightening Torque (Lb-inch): 7

ORDERING INFORMATION

PART NO.	SUPPLY VOLTAGE
385AR-100-T5X	85 to 270V AC/DC

24V AC/DC Model Available:
Please Consult Factory

DESCRIPTION

Model 425AR digital timer is a multi-function, multi range series. It comes standard with a 4-digit, 7-segment dual LED display. S The unit can be set for up/down counting direction and modes of operation include on-delay, interval, cyclic, forward-pause-reverse, instantaneous contact and delayed batch. The Model 425AR series is available in a 1/16 DIN (48 x 48 mm) housing with 2 SPST (NO) 5a @ 230 vac contacts and a supply operating voltage range of 90 to 270 vac/dc (50/60Hz). The 425AR series is UL approved and CE certified.

SPECIFICATIONS

START INPUT	Gate/Pulse start (programmable)
ACCURACY	±0.05% of F.S or 50 msec (F.S.=Full Scale)
RESET	Front, Remote, Power interruption (programmable)
OUTPUT CONTACT	2 SPST (2 NO)
RELAY RATING	5A @ 230V AC
MODES	ON delay / Interval delay Cyclic ON first / Cyclic OFF first Forward-pause-reverse Instantaneous + delayed Batch
TIME RANGES	0-99.99 sec
	0-999.9 sec
	0-9999 sec
	0-99:59 min:sec,
	0-999.9 min
	0-9999 min
	0-99:59 hr:min,
	0-999.9 hr
	0-9999 hr
COUNTING DIRECTION	Up/Down
MEMORY	10 years
CONFIGURATION LOCK	Password protected
SUPPLY VOLTAGE	90 to 270V AC/DC (50/60Hz) -15% to 10% tolerance
POWER CONSUMPTION	5VA max.
TEMPERATURE	Operating: 0-50°C (32 to 122°F)
	Storage: -20 to 75°C (-4 to 167°F)
HUMIDITY (non-condensing)	95% RH
WEIGHT	6.2 oz.
PROTECTION LEVEL	IP65 for faceplate

24V AC/DC MODEL AVAILABLE
Please consult factory

E339488

Multifunction Timer

- Multifunction - 7 Timing Functions
- 9 Time Ranges
- Dual Display, 4 Digit, 7 segment LED
- LED Status Indicator:
  Relay Status, Seconds, Minutes, Hours
- 2 Setpoints
- Batch Function

DIMENSIONS (INCHES/MILLIMETERS)

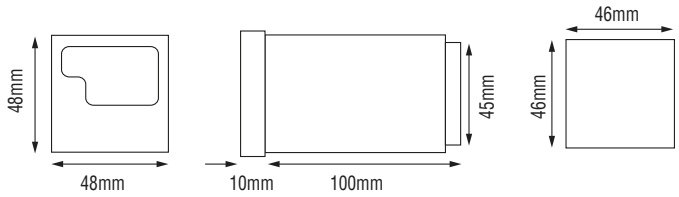

TERMINAL CONNECTIONS

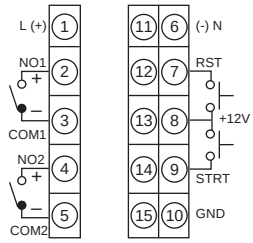

Cable Size (AWG): 13; Stud Hole for Lug (inch): 0.137 ; Tightening Torque (Lb-inch): 7

ORDERING INFORMATION

MODEL NUMBER	SUPPLY VOLTAGE
425AR100T5X	90 to 270 V AC/DC

TIMING DIAGRAMS

Function: ON Delay

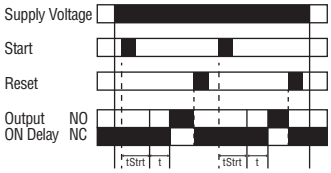

tStrt = start time ; t = set time delay

Function: Interval

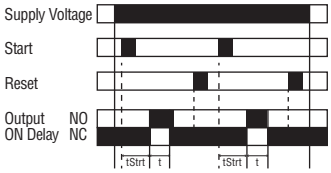

tStrt = start time ; t = set time delay

Function: Cyclic ON First

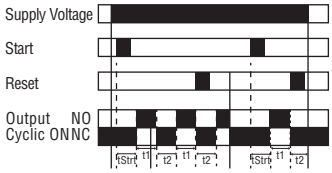

tStrt = start time ; t1 = ON time ; t2 = OFF time

Function: Cyclic OFF First

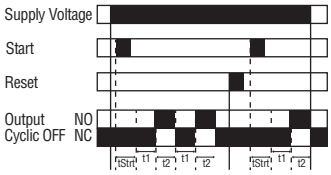

tStrt = start time ; t1 = OFF time ; t2 = ON time

Function: Motor Reverse Mode

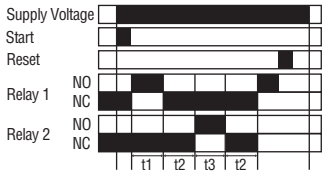

t1 = ON time of Relay1 ; t2 = Pause time ; t3 = ON time of Relay2

Function: Instantaneous + Delayed At Start Pulse

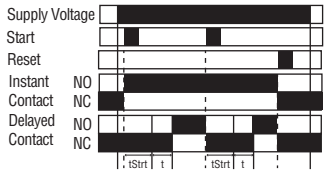

tStrt = start time ; t = set time delay

Function: Instantaneous + Delayed At Power ON

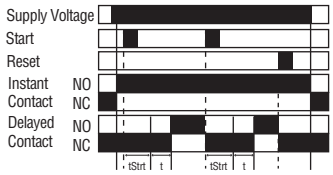

tStrt = start time ; t = set time delay

Function: Batch

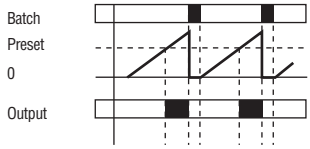

The **ATC 652** is a micro-processor-based timer with a 4-1/2 digit LCD display that can provide an indication of either preset time remaining or elapsed. There are five timing ranges covering time values from one millisecond to 199 hours 59 minutes. The unit has both an instantaneous relay output and a programmable relay output which can be programmed for any one of 14 different timing modes.

The timing range and mode are selected with an internal DIP switch. The time value is entered using the keypad on the front face. The programmed values are retained in memory and are secured in memory by a keypad lockout command. The keypad can also be used to perform secondary functions such as reset, immediate time out, time inhibit, changing the direction of the display, displaying the number of cycles run, and clearing the cycle counter.

The Model 652 is housed in a standard 15-terminal, plug-in, round case. Models are available for operation on either 120 VAC or 240 VAC.

C UL US
E205980

Multi-Function Multi-Range Timer

DIMENSIONS (INCHES/MILLIMETERS)

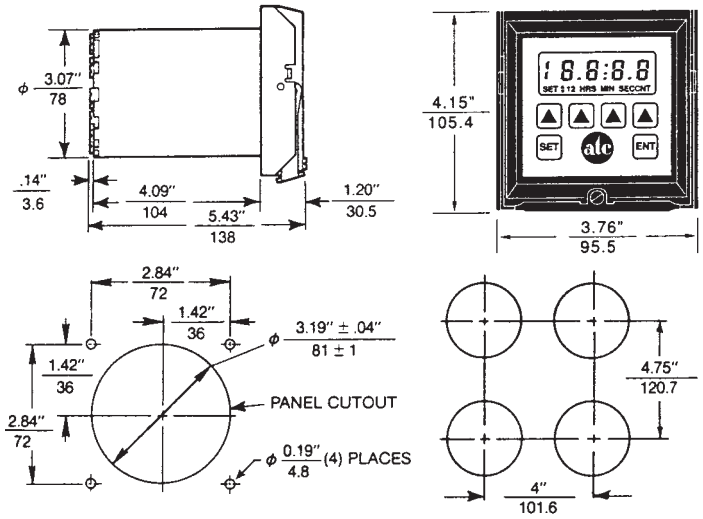

- Five Time Ranges From 0.001 SEC
- Replaces Most Electro-Mechanical Timers
- Six Single-Cycle and Eight Repeat-Cycle Timing Modes
- Easy Programming 7/16" High LCD Display
- Sealed Faceplate
- Keypad Lockout of Time Setting
- Internal Cycle Counter
- Data Retention Memory with EEPROM Circuitry (652-8-4000, 652-8-4001 Models)
- Data Retention Memory with Lithium Battery (included with timer) (652-8-5000, 652-8-5001 Models)

model 600-3-3950 surface mounting bracket

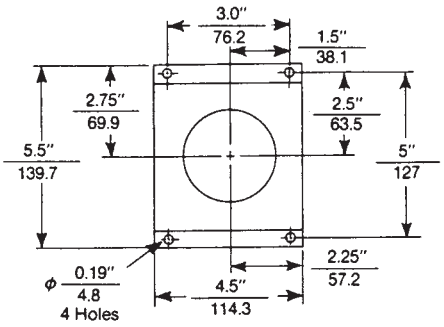

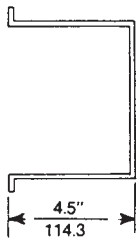

WIRING

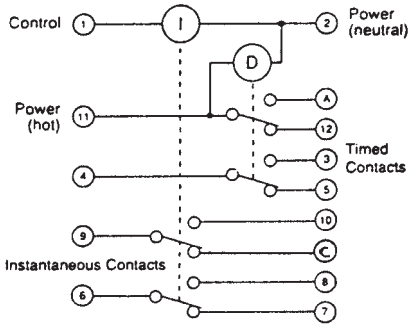

SPECIFICATIONS (ALL MODELS)

TIMING RANGES	0.001 SEC to 19.999 SEC 0.01 SEC to 199.99 SEC 0.1 SEC to 1999.9 SEC 1 SEC to 199 MIN 59 SEC 1 MIN to 199 Hr. 59 MIN
MODE OF OPERATION	ON-Delay, Interval, Reverse Start Delay Reverse Start Interval, Momentary Start Accumulator, Repeat Cycle-OFF First Repeat Cycle-ON First, Repeat Cycle Reverse Start-OFF First, Repeat Cycle Reverse Start-ON First, Repeat Pulse Repeat Pulse, First Pulse Immediate Repeat Pulse-Reverse Start, Repeat Pulse, First Pulse Immediate Reverse Start
TIME SETTING	Front Panel Keypad
TIME REPEAT ACCURACY	±0.005 SEC
DISPLAY	LCD - 4 1/2 Digit, 7/16" High
RELAY MECHANICAL LIFE	50,000,000 Operations
INSTANTANEOUS RELAY OUTPUT	7 Amps Resistive, 240 VAC, 2 N.O. 2 N.C. Contacts
TIMED RELAY OUTPUT	7 Amps Resistive, 240 VAC, 2 N.O. 2 N.C. Contacts
TEMPERATURE RATING	32° - 140°F (0° - 60°C)
OPERATING POWER	120 or 240 VAC, +10%, -20%, 50/60 Hz
TRANSIENT VOLTAGE PROTECTION	Metal Oxide Varistor
NEMA RATING	NEMA 12
TERMINALS	Screw Terminals
MOUNTING	Plug In Case
WEIGHT	Net: 25 oz. Shipping: 30 oz.

SPECIFICATIONS (652-8-4000 & 652-8-4001)

RESET TIME	25 mSEC
CONTROL VOLTAGE INITIATE TIME	25 mSEC
MEMORY	EEPROM Circuitry
POWER CONSUMPTION	5.2 VA

SPECIFICATIONS (652-8-5000 & 652-8-5001)

RESET TIME	8 mSEC
CONTROL VOLTAGE INITIATE TIME	8 mSEC
MEMORY	Lithium Battery (Included with unit)
POWER CONSUMPTION	3.7 VA

ORDERING INFORMATION

MODEL NUMBER	DESCRIPTION
652-8-4000	Plug-in, Round Case Timer 120 VAC W/EEPROM Memory
652-8-4001	Plug-in, Round Case Timer 240 VAC W/EEPROM Memory
652-8-5000	Plug-in, Round Case Timer 120 VAC W/Battery Memory
652-8-5001	Plug-in, Round Case Timer 240 VAC W/Battery Memory
651-3-0128	Mounting Gasket, 1/8" Thick (Included With Timer)
651-3-0129	Mounting Gasket, 1/4" Thick (Included With Timer)
600-3-3950	Base Mounting Bracket

Replacement lithium batteries - Old ATC Part #652-3-0130 is not available. Use TADIRAN#TL-5902/S SAFT, #LS14250 or EAGLE-PICHER #PT-2150 from most electrical distributers.

The **ATC 653** is a micro-processor-based control that can function as either a timer or a counter. It has a 4-1/2 digit LCD that can provide an indication of either the time or count value remaining or elapsed. There are five timing ranges covering time values from one millisecond to 199 hours 59 minutes. There are also three count speeds to a maximum of 7500 counts per second. The unit has an instantaneous relay output and a programmable relay output which can be programmed for any one of 14 different timing modes.

The timing range, count speed and timing mode are programmed with an internal DIP switch assembly. An external switch determines whether the time inhibit or count input takes place with application or removal of voltage. The time or count value is preset by the operator using the keypad on the front face.

These programmed values are retained in memory and are secured in memory by a keypad lockout command. The keypad can also be used to perform secondary functions such as reset, immediate time/count out, time/count inhibit, changing the direction of the display, displaying the number of cycles run, and clearing the cycle counter.

The Model 653 is housed in a standard 15-terminal plug-in round case. Models are available for operation on either 120 VAC or 240 VAC. Counting can be done at either line voltage or at 12-48 VDC/24 VAC jumper selected.

E205980

Multi-Function Multi-Range Solid-State

- Functions As Timer or Counter
- Five Time Ranges
- Six Single-Cycle and Eight Repeat-Cycle Timing Modes
- Sealed Faceplate
- Cycle Counter
- Count Input Scaling
- Data Retention Memory with EEPROM Circuitry. (653-8-4000, 653-8-4001 Models)
- Data Retention Memory with Lithium Battery (included with timer) (653-8-5000, 653-8-5001 Models)

DIMENSIONS (INCHES/MILLIMETERS)

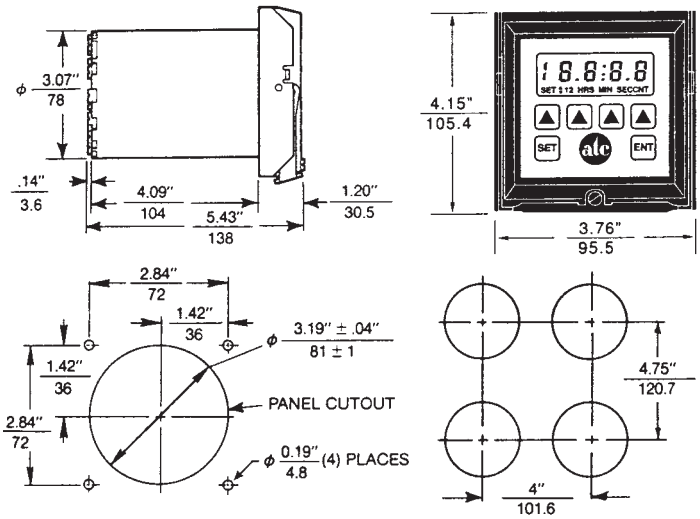

model 600-3-3950 surface mounting bracket

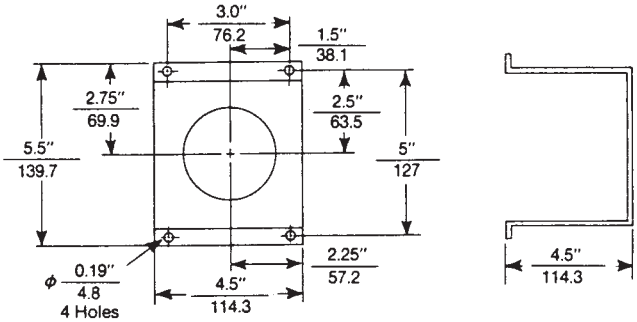

WIRING

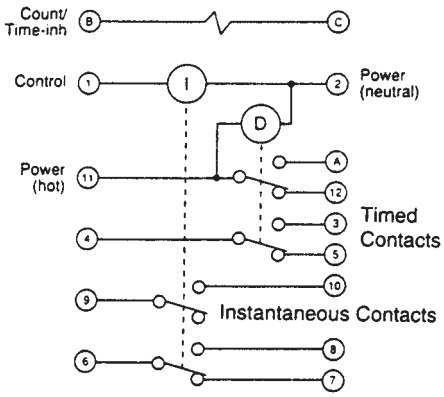

SPECIFICATIONS (ALL MODELS)

TIMING RANGES	0.001 SEC to 19.999 SEC
	0.01 SEC to 199.99 SEC
	0.1 SEC to 1999.9 SEC
	1 SEC to 199 MIN 59 SEC
	1 MIN to 199 Hr. 59 MIN
COUNT MODES	500 CPM, AC/DC
	5000 CPM, AC/DC
	7500 CPS, DC Only
MODE OF OPERATION	ON-Delay, Interval, Reverse Start Delay
	Reverse Start Interval, Momentary Start
	Accumulator, Repeat Cycle-OFF First
	Repeat Cycle-ON First, Repeat Cycle
	Reverse Start-OFF First, Repeat Cycle
	Reverse Start-ON First, Repeat Pulse
	Repeat Pulse, First Pulse Immediate
	Repeat Pulse-Reverse Start, Repeat Pulse
	First Pulse Immediate Reverse Start
TIME SETTING	Front Panel Keypad
TIME REPEAT ACCURACY	Count: 100% Time: ±0.005 SEC
DISPLAY	LCD - 4 1/2 Digit, 7/16" High
RELAY MECHANICAL LIFE	50,000,000 Operations
INSTANTANEOUS RELAY OUTPUT	7 Amps Resistive, 240 VAC, 2 N.O.
	1 N.C. Contact
TIMED RELAY OUTPUT	7 Amps Resistive, 240 VAC, 2 N.O.
	2 N.C. Contacts
TEMPERATURE RATING	32° - 140°F (0° - 60°C)
OPERATING POWER	120 or 240 VAC, +10%, -20%, 50/60 Hz
TRANSIENT VOLTAGE PROTECTION	Metal Oxide Varistor
NEMA RATING	NEMA 12
TERMINALS	Screw Terminals
MOUNTING	Plug In Case
WEIGHT	Net: 25 oz. Shipping: 30 oz.

SPECIFICATIONS (652-8-4000 & 652-8-4001)

RESET TIME	25 mSEC
CONTROL VOLTAGE INITIATE TIME	25 mSEC
MEMORY	EEPROM Circuitry
POWER CONSUMPTION	5.2 VA

SPECIFICATIONS (652-8-5000 & 652-8-5001)

RESET TIME	8 mSEC
CONTROL VOLTAGE INITIATE TIME	8 mSEC
MEMORY	Lithium Battery (Included with unit)
POWER CONSUMPTION	3.7 VA

ORDERING INFORMATION

MODEL NUMBER	DESCRIPTION
653-8-4000	Plug-in, Round Case Timer 120 VAC W/EEPROM Memory
653-8-4001	Plug-in, Round Case Timer 240 VAC W/EEPROM Memory
653-8-5000	Plug-in, Round Case Timer 120 VAC W/Battery Memory
653-8-5001	Plug-in, Round Case Timer 240 VAC W/Battery Memory
651-3-0128	Mounting Gasket, 1/8" Thick (Included With Timer)
651-3-0129	Mounting Gasket, 1/4" Thick (Included With Timer)
600-3-3950	Base Mounting Bracket

Replacement lithium batteries - Old ATC Part #652-3-0130 is not available. Use TADIRAN#TL-5902/S SAFT, #LS14250 or EAGLE-PICHER #PT-2150 from most electrical distributers.

The ATC Model 655 timer is an electronic control that will retrofit most round case electromechanical timers. the control performs the same timing modes (ON-Delay or Reverse Start Delay) as electromechanical units, and it is capable of timing ranges from 1 millisecond to 199 hours, 59 minutes. On the bottom inside of the control are DIP switches which can be set, in seconds, to establish the timing mode and time range. Our unit will plug into competitive mounted cases without wiring changes in most instances. Remove the electromechanical timer, set ours, plug it into the electromechanical timer case and you're ready to run. DIP switch setting instructions for electromechanical timers are supplied with 655 installation instructions.

DIMENSIONS (INCHES/MILLIMETERS)

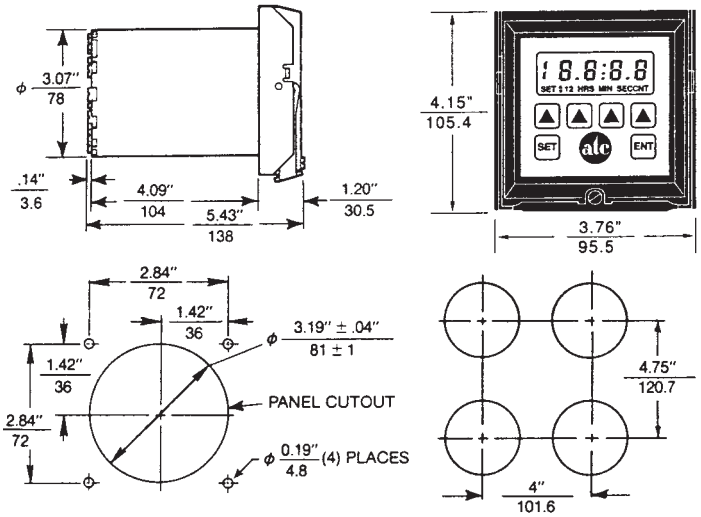

model 600-3-3950 surface mounting bracket

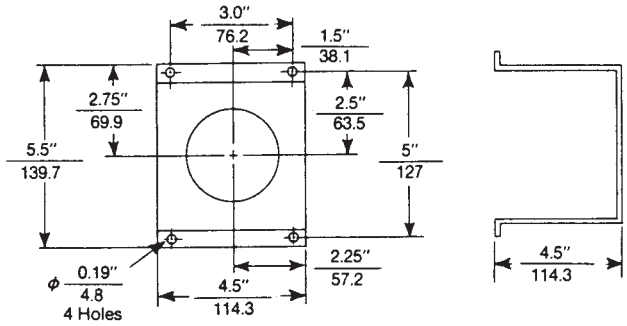

WIRING

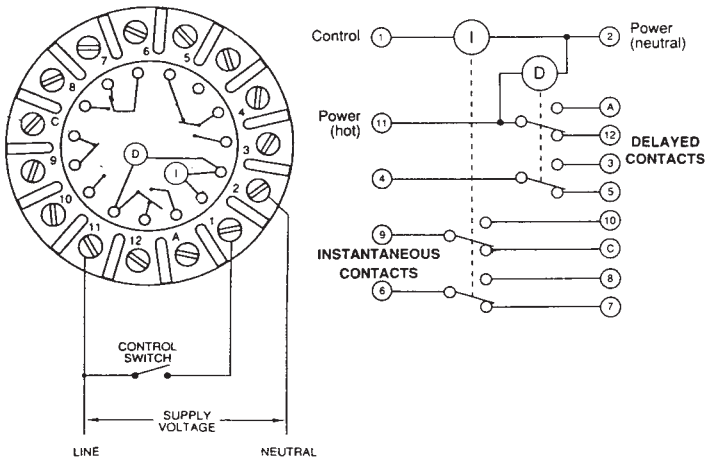

E205980

Panel Mounted Digital Timer

- Direct Replacement For Electromechanical Timers
- Two Timing Modes
- Data Retention with EEPROM Memory or Battery (included with timer).
- Five Time Ranges
- Simple Keypad Time Setting
- Sealed Faceplate
- Keypad Lockout of Time Setting
- Easy Programming
- Instantaneous Contacts Directly Track the Control Input

ORDERING INFORMATION

MODEL NUMBER	DESCRIPTION
655-8-4000	Timer 120VAC W/EEPROM Memory
655-8-4001	Timer 240VAC W/EEPROM Memory
655-8-5000	Timer 120 VAC W/Battery Memory
655-8-5001	Timer 240 VAC W/Battery Memory
600-3-3950	Base Mounting Bracket
651-3-0128	Mounting Gasket, 1/8" Thick (Included with Timer)
651-3-0129	Mounting Gasket, 1/4" Thick (Included with Timer)

Replacement lithium batteries - Old ATC Part #652-3-0130 is not available. Use TADIRAN#TL-5902/S SAFT, #LS14250 or EAGLE-PICHER #PT-2150 from most electrical distributers.

DIP SWITCH SETTING GUIDE

Eagle Part Number	655 Switch Settings						
	1	2	3	4	5	6	7
HP50A6	O	O	X	O	O	O	O
HP50A601	O	O	X	O	O	X	O
HP51A6	O	O	X	O	O	O	O
HP51A601	O	O	X	O	O	X	O
HP52A6	O	X	O	O	O	O	O
HP52A601	O	X	O	O	O	X	O
HP53A6	O	X	X	O	O	O	O
HP53A601	O	X	X	O	O	X	O
HP54A6	O	X	X	O	O	O	O
HP54A601	O	X	X	O	O	X	O
HP55A6	O	X	X	O	O	O	O
HP55A601	O	X	X	O	O	X	O
HP56A6	O	X	X	O	O	O	O
HP56A601	O	X	X	O	O	X	O
HP57A6	O	X	X	O	O	O	O
HP57A601	O	X	X	O	O	X	O
HP58A6	X	O	O	O	O	O	O
HP58A601	X	O	O	O	O	X	O
HP59A6	X	O	O	O	O	O	O
HP59A601	X	O	O	O	O	X	O
HP510A6	X	O	O	O	O	O	O
HP510A601	X	O	O	O	O	X	O
HP511A6	X	O	O	O	O	O	O
HP511A601	X	O	O	O	O	X	O
HP514A6	O	O	X	O	O	O	O
HP514A601	O	O	X	O	O	X	O
HP515A6	O	O	X	O	O	O	O
HP515A601	O	O	X	O	O	X	O
HP517A6	O	O	X	O	O	O	O
HP517A601	O	O	X	O	O	X	O
HP518A6	O	X	X	O	O	O	O
HP518A601	O	X	X	O	O	X	O

DIP SWITCH DEFINITIONS

0=OFF X=ON

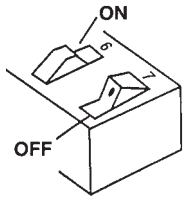

1.Determine Eagle Model Number: To determine the Model Number of the Eagle HP5; remove timer from case by loosening the screw at the lower front of the timer face and lift the mounting handle and pull the timer from the case. The model number will be on the left side of the timer. Some models will have a metal plate with the part number, others have a label with the number in that same area.

2. Remove Control: Remove the 655 control from its case by loosening the screw at the bottom of the chrome handle, lifting the handle up and pulling the control forward.

3. Determine Switch Settings: Determine how the 655 DIP switches should be set to retrofit that particular HP5 model using the DIP Switch Setting Guide.

4. Set Time Base: Hold the control to expose the DIP switch assembly on the bottom of unit and set the time base you require on switches 1, 2, and 3.

5. Set Timing Mode: To select the timing mode required, set switches 5, 6, and 7 on the switch assembly as recommended by the DIP Switch Setting Guide.

6. Set Preset Time: Position the 655 control so that you are looking at the keypad on the front of the unit. Push the SET button and four dashes will appear. Depress the SET button a second time and word SET and four zeros will appear. To enter the preset time desired, press the ENT button and preset number will flash seven and go blank. The Model 655 timer is now ready to operate and can be returned to its case or directly into the case of the HP5 that it is replacing. To check or change the preset time; push the SET button and time setting will be displayed. To change the preset time follow the same procedure as indicated previously in this paragraph. When you have completed setting a new preset time, push the ENT button. The preset time can be changed when the 655 is running a cycle or "on the fly". That run cycle will be completed based on the preset at the beginning of the cycle. The new preset will control the next cycle.

NOTE: If the "SET" button is pushed to review or change the preset time, the ENT button must be pushed to return the control to the operating mode.

*NOTE: Dipswitch #8 inactive

SPECIFICATIONS (ALL MODELS)

TIMING RANGES	0.001 SEC to 19.999 SEC 0.01 SEC to 199.99 SEC 0.1 SEC to 1999.9 SEC 1 SEC to 199 MIN 59 SEC 1 MIN to 199 Hr. 59 MIN
TIMING MODES	ON-Delay or Reverse Start Delay
RESET TIME	25 mSEC
CONTROL VOLTAGE INITIATE TIME	25 mSEC
MEMORY	4000/4001 - EEPROM 5000/5001 Lithium Battery - Replaceable
POWER CONSUMPTION	5.2VA
TIME SETTING	Front Panel Keypad
TIME REPEAT ACCURACY	± .005 SEC
DISPLAY	LCD: 4-1/2 Digit, 7/16" High
RELAY MECHANICAL LIFE	50,000,000 Operations
INSTANTANEOUS RELAY OUTPUT	7 Amps Resistive, 240 VAC 2 N.O.
TIMED RELAY OUTPUT	7 Amps Resistive, 240 VAC 2 N.O., 2 N.C. Contacts
SHORT CIRCUIT PROTECTION	1/4 Amp Fuse
TEMPERATURE RATING	32° to 140°F (0° to 60°C)
OPERATING POWER	120 or 240 VAC, +10%, -20%, 50/60 Hz.
TRANSIENT VOLTAGE PROTECTION	Metal Oxide Varistor
NEMA RATING	NEMA 12
TERMINALS	Screw Terminals
MOUNTING	Plug In Case
WEIGHT	Net: 25 oz. Shipping: 30 oz.

The solid-state 354 is manufactured from a series of computer-tested plug-in circuit boards and assembled virtually without hand wiring. Because it has no moving parts in its logic circuits, its life expectancy is practically unlimited. Even the load relay—the 354's only significant mechanical component—has a life expectancy of 100,000,000 operations (no load), while the optional solid-state switch module has a virtually unlimited life expectancy. As a result, the 354 achieves an overall reliability that surpasses even the high level achieved by previous Shawnee counters.

CYCLE PROGRESS INDICATION: The Shawnee 354 indicating counter provides cycle progress indication on a four-digit display located immediately above the digital setting number wheels. While the non-indicating

EASY TO SET AT ALL TIMES: The Shawnee counter is easily and accurately set even with work gloves on. Push any of its four toggle levers in any sequence until the number you want appears above it. You can decrease as well as increase each number by pushing the levers up or down. You can change the setting at any time, even during a cycle.

NOISE IMMUNITY: The 354 does not have to be shielded: its transformer power supply, full-wave bridges, buffered logic and other design characteristics render it immune to the electrical noise that is sometimes encountered in industrial environments thus eliminating false starts and reset due to voltage spikes.

PLUG-IN AND DUST-TIGHT: All 354 counters feature true plug-in design and are dust-tight from the front of panel.

100% ACCURATE AND BOUNCE-PROOF: The repeat accuracy of the Shawnee 354 is 100% at all rated speeds, even in the presence of contact bounce. The 354 has two selectable levels of bounce suppression: a normal level which eliminates false counts at speeds up to 500 per second with reed switch inputs, and 5,000 per second with DC voltage pulses; and a high level, for speeds up to 80 per second with high-bounce contact closures (relays, precision switches, etc.).

HOUSING, IT OCCUPIES 40% LESS: Packaged in a 72mm^2 DIN size housing, the 354 occupies 40% less panel space than previous IC counters. Modern production and assembly techniques have substantially reduced manufacturing costs resulting in a 45% cost saving.

CONTROL VERSATILITY: The 354 operates either as a repeat cycle pulse generator or in single-cycle interval or delayed mode. You choose the kind of control action you want by installing jumpers on the terminal block. It also provides a choice of control output, a standard plug-in SPDT relay or an optional SPST solid-state switch module...plus an independent and separate DC output signal at Terminal 6.

OPERATION

The Shawnee 354 operates on a digital logic circuit with three main elements: input circuits which allow it to count various types of DC pulses; a read-only-memory (ROM) whose output is set by the counter's digital setting number wheels; and a comparator that continuously examines the outputs of the input circuit and ROM. When the start (ready/reset) signal is on, the input circuit begins to count incoming pulses, feeding the total count continuously to the comparator. When input circuit output exactly equals ROM output, the 354 counts out. At that instant, the input circuit automatically turns itself off even if the start signal remains on; it is therefore not necessary to turn off the pulses externally. At the same instant, the 354 provides one of three load control actions depending on how it is wired (see Typical Applications). When the 354 is wired for interval operation, the counter's output device (either the standard SPDT relay or the optional SPST switch module) is energized from the start to the end of the count cycle; so is the DC output at terminal 6.

E48329

Shawnee II High Speed Counter

MODEL NUMBER

MODEL NUMBER	354C			30	P	
RANGE						
9,999 Counts		350				
99,990 Counts (units digit blind)		353				
Special		000				
VOLTAGE & FREQUENCY						
120 VAC 50-60 Hz			Q			
240 VAC, 50-60 Hz			R			
ARRANGEMENT						
With Display (On-Delay)				30		
FEATURES						
Basic plug-in unit					P	
Standard unit						X
Special						K
ACCESSORIES						
Surface mounting bracket kit					0353-260-27-00	
Retrofit kit					0305-265-61-70	

DIMENSIONS (INCHES/MILLIMETERS)

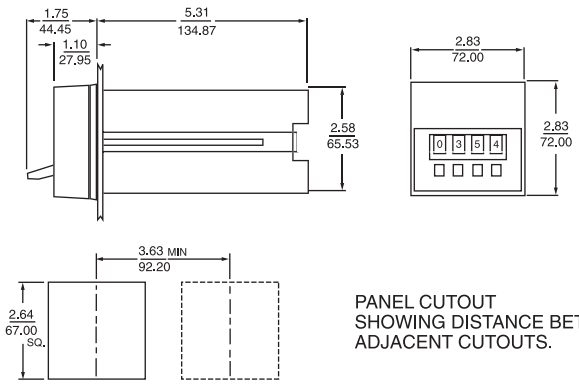

The 354C Directly Replaces 354B & 354A.

SPECIFICATIONS

CYCLE PROGRESS INDICATOR	Indicating model only–digit, 0.3 inch, high intensity, blue display	
RANGE	1 to 9999 counts or 10 to 99,990, presettable in 10 count increments.	
PULSE INPUTS	*Isolated Contact Input (Dry)*	
	Min. Open Resistance	1 megohm
	Max. Closed Resistance	20K ohms.
	Switch Requirements	10mA, 30V
	Count Rate and Bounce Immunity With normal bounce immunity–for Reed Switches (Terminal 9 jumpered to 13)	
	Max. Count Rate	500/SEC
	Min. Closed Time	100 µSEC
	Min. Open Time	1 mSEC
	Max. Open Time for Any Single Bounce	0.3 mSEC
	Count Rate and Bounce Immunity with maximum bounce immunity–for Precision Switches (Terminal 9 jumpered to 10 and 11)	
	Max. Count Rate	80/ SEC
	Min. Closed Time	30 µSEC
	Min. Open Time	6 mSEC
	Max. Open Time for Any Single Bounce	2.5 mSEC
VOLTAGE INPUTS	Positive Polarity	On at 4.5V min. Off at 1.0V max
	Negative Polarity	On at 3.0V min. Off at 1.0V max.
	Max. Continuous Input	40V.
	Ripple Voltage	Must not go below min. req.
	Input Impedance	5K ohms
	Min. ON Time	60 µSEC
	Min. OFF Time	100 µSEC
	Count Rate	5K Hz max.
	Rise and Fall Time Req.	none.
DELAYED MODE	Relay Operate Time (after coincidence)	20 mSEC max.
	Relay Release Mode	20 mSEC max.
INTERVAL MODE	Relay Operate Time	15 mSEC max.
	Relay Release Time (after coincidence)	25 mSEC max.
AUTOMATIC RECYCLE MODE	Pulse On time (with relay) 80 mSEC, + 20 mSEC (may be shortened or lengthened by installing a resistor or capacitor, respectively, across Terminals 12 and 14; see Application section for details)	

When the 354 is wired for delayed control, the output device is energized at the end of the cycle and remains on until the counter is reset; so is the DC output.

When the 354 is wired as a repeat cycle pulse generator, the output device and the DC signal are both off until the end of the count cycle, at which time they are both on for about 80 mSEC From the instant that the output pulse comes on, the 354 stops counting for 500 µSEC while it resets; it automatically begins a new cycle and starts counting pulses again immediately after reset. The duration of the pulse generated by the 354 can be easily lengthened or shortened by wiring a capacitor or resistor across terminals 12 and 14 (see Typical Applications).

START (READY/RESET) SIGNAL	*Voltage Requirements*	
	Positive Polarity	ready at 4.5V MIN reset at 1.0V max.
	Max. Continuous Input	40V
	Ripple Voltage	must not go below MIN req.
	Input Impedance	5K ohms
	Ready-to-Count Time	0.5 mSEC max (after application of voltage to Terminal 7)
	Circuit Reset	1 mSEC max.
	Ready-To-Dropout	20 mSEC max.
	Start Switch Requirements (isolated contact)	
	Switch Rating	10mA, 30V
	Min. Open Resistance	1 megohm
	Max. Closed Resistance	20K ohms
	Latching Mode Operation (interval only)	
	Min. Duration Start Signal	50 µSEC
	Max. Duration Start Signal	continuous
	Reset	when signal is removed after count-out.
LOAD RELAY	LIFE	100,000,000 operations (no load)
	Contact Rating	5 A at 120 VAC, 3 A at 28 VDC 1/20 HP at 120 VAC 5A @ 120 VAC Resistive, 5A, 30 VDC Resistive
SOLID-STATE SWITCH MODULE (OPTIONAL)	Switches external DC voltage supply of positive polarity, 4 to 30V, 50 mA max.; factory-wired to Terminals 3 and 5 (detailed description of operation in Installation Instruction)	
DC OUTPUT (TERMINAL 6)	Voltage	ON– -24V+10% OFF– -1V or less
	Current	with relay –5mA max. without relay –40mA max.
	Impedance	on– 10 ohms max., off–10K ohms.
DC POWER SUPPLY OUTPUT (TERMINAL 8)	Voltage	24V+10%
	Current	40mA max
POWER REQUIREMENTS	120V	95 to 132V, 50/60 Hz inrush–0. 4A running–0.04A.
	240V	190 to 264V, 50/60 Hz inrush–0.2A running–0.02A.
TEMPERATURE RATING	32° to 140°F (0 to 60°C)	
MOUNTING	Standard	Hardware is provided to mount counter so that it is dust-tight from front of panel.
	Optional	Surface mounting with front facing terminals
WEIGHT	NET: 1 lb., 7 oz.	SHIPPING: 2 lbs.

WIRING

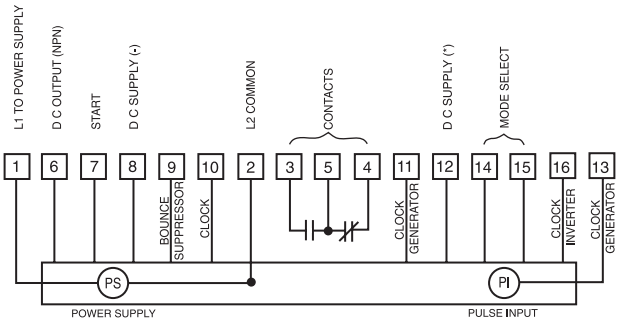

TERMINAL WIRING
SOLID STATE
OUTPUT MODULE

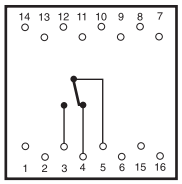

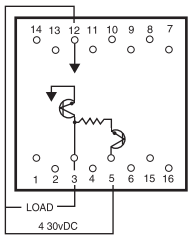

TYPICAL APPLICATIONS

The Shawnee 354 has a readily accessible 16-point terminal which allows its use with a variety of start circuits and input pulses and to program it for the desired load action. To wire the 354C so as to suit a particular application is a relatively simple matter that is easily accomplished by selecting one of the examples in each of the following four steps. Combine the four examples for your wiring diagram.

STEP 1 - START CIRCUITS

The 354 accommodates three types of start signals. To wire the counter properly to your start signal, first determine which of the three types applies, then consult the appropriate wiring diagram. NOTE: AC line connections are always made to Terminals 1 and 2.

A. ISOLATED CONTACT (sustained start signal) The external dry start switch must be closed throughout the count cycle. The 354 is ready to count whenever the switch is closed; it resets when the switch is opened.

ISOLATED CONTACT START— (EXTERNAL START SWITCH

*Jumper for momentary start in interval mode.)

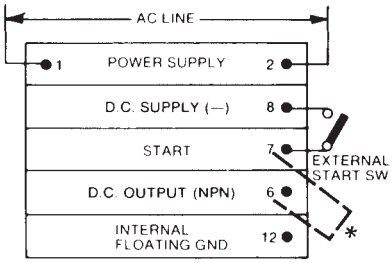

B. DC VOLTAGE (sustained *start* signal) The *start* voltage must be on throughout the count cycle. The 354 is ready to count whenever the voltage reaches +4.5 or -3V DC; it resets when the voltage drops to +1 or -1V DC.

DC VOLTAGE START (SUSTAINED START)

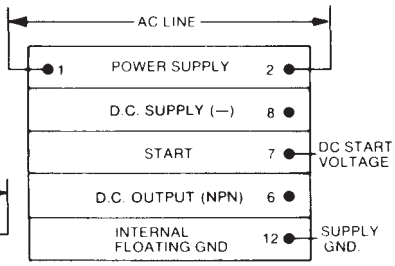

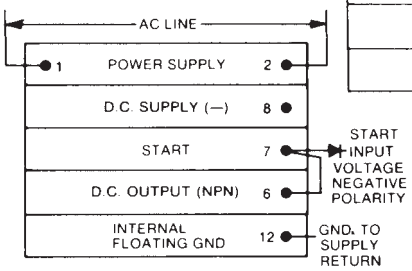

NEGATIVE DC VOLTAGE (MOMENTARY* OR SUSTAINED START)

STEP 2 - PROGRAMMING

The 354 can be used for delayed or interval control or as a repeat cycle pulse generator. Here again, decide which mode you want, then consult the appropriate wiring diagram. Note that the 354 counts on the break of a contact or decrease of a voltage signal when an external jumper is installed between Terminals 12 and 16, as shown in the diagrams in this step. It can also be programmed to count on make simply by leaving the jumper off.

A. DELAYED MODE. The SPDT relay provides one delayed closing and one delayed opening circuit, and the 354 generates a DC signal at Terminal 6 at the end of the cycle.

DELAYED MODE

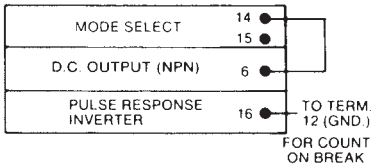

B. INTERVAL MODE. The SPDT relay provides one interval opening and one interval closing circuit, and the 354 provides a - 24VDC signal at terminal 6 during cycle.

INTERVAL MODE

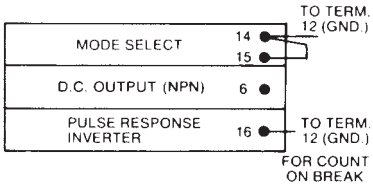

C. NEGATIVE DC VOLTAGE (momentary* or sustained *start* signal.) The *start* signal may be momentary or sustained. The 354 is ready to count whenever the *start* voltage reaches -3V DC. It resets at the end of the cycle, when the start voltage is momentary; or as soon after count-out as the start voltage drops between -1 and 0V DC, when the start signal is sustained.

D. REPEAT CYCLE PULSE GENERATOR. In this mode, the 354 generates an output of 80 ms (±20 ms) at the end of the count cycle; the length of the output pulse can be adjusted as follows:

To shorten the pulse, install a fixed or variable resistor between Terminals 12 and 14, sizing it according to this formula:

$$\frac{2.2t - 26.4}{80\text{-}t} = R$$

Where: t = time in ms (±25%)
R = resistance in megohms

To lengthen the pulse, install a capacitor between Terminals 12 and 14 (if a polarized capacitor, install + to 12, - to 14) and size it according to the formua:

$$\frac{T - 0.08}{1.6} = C$$

Where: T = time in sec (±25%)
C = capacitance in microfarads.

STEP 3 - PULSE INPUTS

The 354 can count from low or high-speed contacts or, by virtue of its built-in pulse shaper, from DC voltage pulses of positive or negative polarity. Choose the wiring diagram that suits your application.

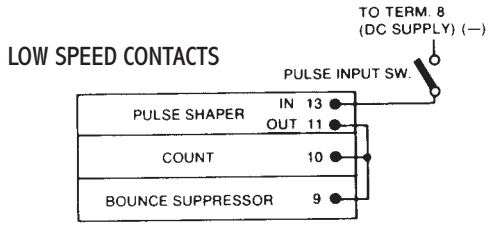

A. LOW-SPEED CONTACTS. The 354 counts input pulses from precision switches, relays, limit switches, etc., at speeds up to 80/SEC.

B. HIGH-SPEED CONTACTS. Input pulses from low-bounce contacts, reed switches, etc., can be counted at speeds up to 500/SEC. In this circuit only, the 354 counts on the break of the pulse switch as received; to count on make, install a jumper between Terminals 12 and 16; this is the reverse of the situation that applies to all other 354B ·

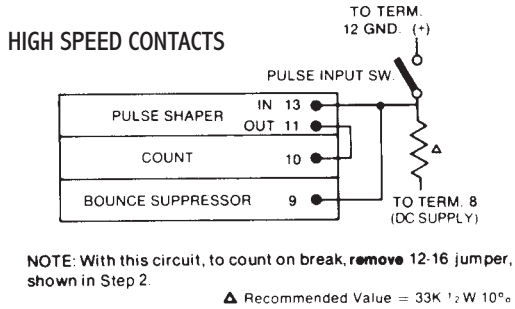

C. DC VOLTAGE PULSES. In this circuit, the 354 counts when the voltage decreases from above +4.5V to below +1V, or from above –3V to below –1V, with a jumper installed between Terminals 12 and 16 as shown in Section 2; to reverse the action, simply remove the jumper.

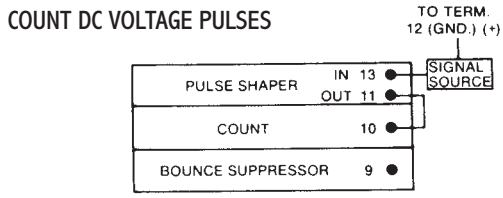

STEP 4 -LOAD ACTION

The load action of the 354 depends on the choice of start circuit and programming mode. Loads are always wired to the 354 in the following manner:

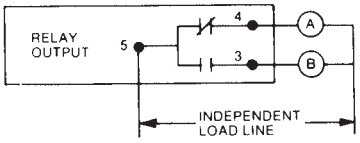

If the 354 is equipped with the optional SPST solid-state switch module, its contacts are always available at Terminals 3 and 5, and its load action is the same as for Load B in the drawings right.

A. DELAYED MODE. The load action in this mode is always the same regardless of the kind of start circuit selected in Step 1; but the start signal must remain on during the entire count cycle, as the counter resets when the start signal is removed.

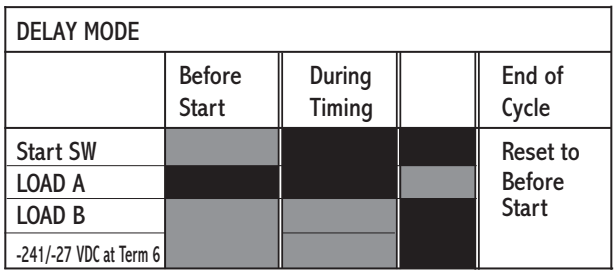

B. INTERVAL MODE WITH SUSTAINED START. In this mode also, the counter resets when the start signal is removed.

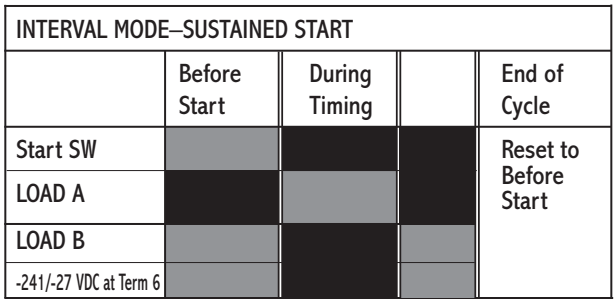

C. INTERVAL MODE WITH MOMENTARY START. Because of the 354's electronic latch capability, it can provide interval control with a momentary negative DC voltage start signal, in which event the 354 resets at the end of cycle. But the counter will also operate with a sustained start signal, in which case it resets when the start signal goes off, as described above.

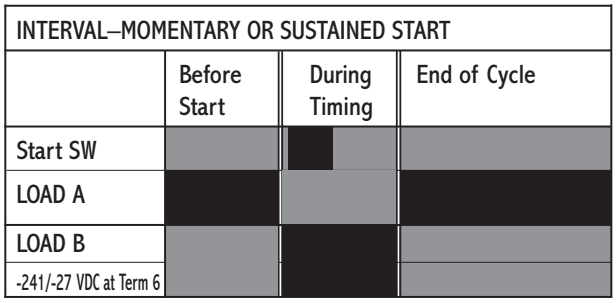

D. REPEAT CYCLE PULSE GENERATOR. When this mode is selected, the start signal must remain on continuously. The 354 generates an output pulse at the end of each count cycle, then resets and repeats automatically. At least 500 µs is required for resetting, between the last count of one cycle and the first count of the next. Count pulses can be of unequal length – long and short as shown in the diagram – provided that they meet the minimum requirements listed in the SPECIFICATIONS.

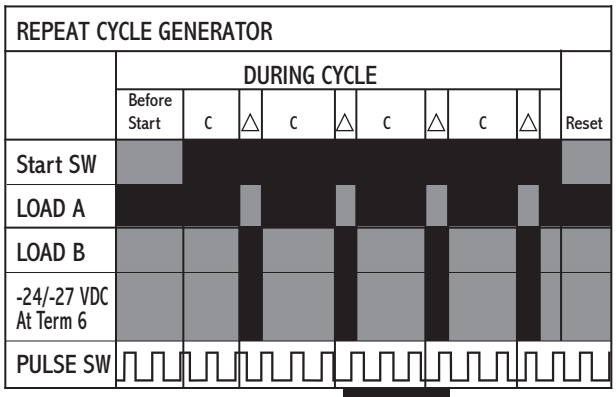

C=COUNT CYCLE=DIAL SETTING

Δ=TIMED PULSE OUTPUT

BLACK– CIRCUIT CLOSED

GRAY– CIRCUIT OPEN

SAVE 40% IN PANEL SPACE AND COST: Packaged in a 72mm² DIN-size housing, the 356 occupies 40% less panel space than previous IC timers. Modern production and assembly techniques have substantially reduced manufacturing costs resulted in a 45% cost saving.

LOW INVENTORY COSTS: Each Shawnee 356 covers the active count range of 1 to 9,999, easily satisfying the vast majority of industrial requirements and thus greatly reducing inventory.

DIMENSIONS (INCHES/MILLIMETERS)

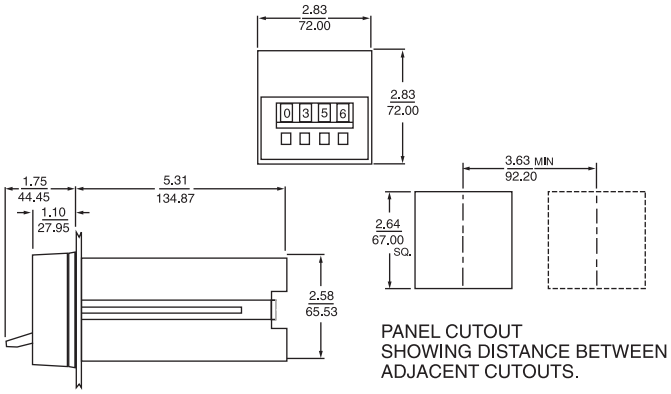

MODEL NUMBER

MODEL NUMBER	356C			30	P	
RANGE						
9,999 Counts		350				
99,990 Counts (units digit blind)		353				
Special		000				
VOLTAGE & FREQUENCY						
120 VAC 50-60 Hz			Q			
240 VAC, 50-60 Hz			R			
ARRANGEMENT						
With Display (On-Delay)				30		
FEATURES						
Basic plug-in unit					P	
Standard unit						X
Special						K

ACCESSORIES

Surface mounting bracket kit	0353-260-27-00
Retrofit kit	0305-265-61-70

The 356C Directly Replaces 356B & 356A.

Shawnee II Digital Counter

A compact version of the 336 counter, the ATC 356 is its exact functional duplicate. Packaged in a 72mm² DIN-size housing, it occupies 40% less panel space and costs proportionately less. Modern production and assembly techniques have all but eliminated hand wiring, enhancing the reliability and life expectancy of the 356.

FAST, ACCURATE AND BOUNCE-PROOF: The repeat accuracy of the 356 is 100%. It maintains full accuracy even at pulse rates up to 4,000/minute, even with pulses that are as brief as 1 millisecond, and even in the face of severe contact bounce, which it ignores by virtue of an extremely effective anti-bounce circuit.

EASY TO SET AT ALL TIMES: The Shawnee counter is easily and accurately set even with work gloves on. Push any of its four toggle levers in any sequence until the number you want appears above it. You can decrease as well as increase each number by pushing the levers up or down. You can change the setting at any time, even during a cycle.

PLUG-IN AND DUST-TIGHT: All 356 counters feature true plug-in design and can be replaced in seconds without disturbing the housing or disconnecting the wiring. The dial assembly is gasketed so that the counter body is dust-tight from the front of panel.

CYCLE PROGRESS INDICATION: The Shawnee 356 indicating counter provides cycle progress indication on the four-digit display located immediately above the digital setting number wheels. When the counter is in the reset condition, the VFD display is blank. During the cycle, the display counts up from 0, thus always indicating the number of counts that have elapsed since the start of cycle. At count-out, the display shows the total elapsed count and thus equals the numbers on the digital setting wheels.

COMPUTER-TESTED RELIABILITY: The solid-state 356 is manufactured from a series of computer-tested plug-in circuit boards and assembled virtually without hand wiring. Because it has no moving parts in its logic circuits, its life expectancy is practically unlimited. Even the load relay – the 356's only significant mechanical component – has a life expectancy of 10,000,000 operations (no load). As a result the 356 achieves an overall reliability that surpasses even that achieved by previous Shawnee counters.

NOISE IMMUNITY: The 356 does not have to be shielded: its transformer power supply, full-wave bridges, buffered logic and other design characteristics render it immune to the electrical noise that is sometimes encountered in industrial environments thus eliminating false starts and reset due to voltage spikes.

OPERATION

The Shawnee 356 operates on a digital logic circuit with three main elements: a pulse circuit; a read-only-memory (ROM) whose output is set by the counter's digital setting number wheels; and a comparator that continuously examines the outputs of the pulse circuit and ROM.

When power is applied (start signal on), two things happen simultaneously; the instantaneous DPDT relay is energized transferring both sets of contacts, and the pulse circuit begins to count each input pulse whose duration is at least 1 millisecond. The pulse circuit accumulates the count and feeds the total continuously to the comparator. When pulse circuit output exactly equals the output of the ROM, the comparator causes the 356 to count out.

At this point, (1) the DPDT delay relay is energized, immediately transferring both sets of contacts and (2) the pulse circuit turns itself off automatically. Since the pulse circuit stops counting even if the start signal remains on, it is not necessary to tie up one of the 356's delayed contacts to do this job.

To reset the 356, power must be removed from terminal 1 (L1) for 75 milliseconds or more. The 356 operates in the on-delay mode only, always resetting whenever there is a power outage and starting a new cycle when power is restored.

		Switching Sequence*		
RELAY	CONTACTS	Before Start	During Timing	End of Cycle
Instantaneous	14-9/6-8			
	14-10/6-7			
Delayed (D2)	11-12/4-5			
	11-13/4-3			

*Assumes a sustained closed start signal (i.e. longer than the setting on the digital display)

BLACK– CIRCUIT CLOSED

GRAY– CIRCUIT OPEN

WIRING

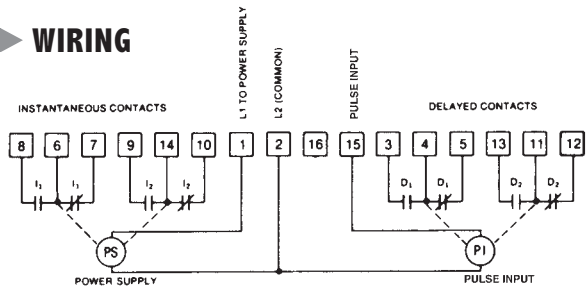

TERMINAL WIRING:

INDICATING MODEL

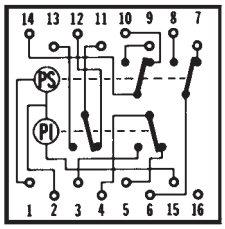

SPECIFICATIONS

RANGE	1 to 9999 counts or 10 to 99,990, presettable in 10 count increments.	
COUNT INPUT	2300/MIN with 1:1 on-off time	
	4000/MIN with 1 mSEC on: 13 mSEC off	
	500/MIN with 20 mSEC on and 100 mSEC off	
	Wired for count and repeat operation	
	Min. Pulse ON Time: 1 mSEC	
	Min. Pulse OFF Time: 13 mSEC	
	Ready-To-Count Time	10 mSEC after application of power to terminals 1 and 2
	Bounce Immunity (max. bounce open time)	6 mSEC
	Pulse Contact Req.	30mA (at line voltage)
CYCLE PROGRESS INDICATOR	4 digit, 0.3 inch, high intensity, blue display.	
REPEAT ACCURACY	100%	
RESET TIME	75 mSEC minimum	
MINIMUM SETTING	1 count	
COUNT CONTROL MODES	Single Cycle	interval or delayed
	Repeat Cycle	pulses
LOAD RELAYS	Number	two, one instantaneous and one delayed; both plug-in, DPDT
	Operate Time	20 mSEC max.
	Release Time	instantaneous –20 mSEC, max. delayed–75 mSEC, max.
	Contact Rating	5A at 120 VAC. 2A at 240 VAC, 0.1A at 125 VDC
	Life	100 million operations (no load.)
TEMPERATURE RATING	32° to 140°F (0° to 60°C)	
POWER REQUIREMENTS	120V	95-132V at 50 or 60 Hz inrush -0.4A running —0.08A
	240V	190-264V at 50 or 60Hz inrush - 0.2A running—0.04A
TERMINALS	16 screw terminals accessible at rear; integral wiring diagram on housing.	
HOUSING	Plug-in design; completely gasketed, dust-tight when panel-mounted.	
MOUNTING ACCESSORIES See Accessory section of catalog	Standard	Hardware is provided to mount timer so that it is dust-tight from front of panel.
	Optional	Surface mounting without and with front-facing terminals.
WEIGHT	NET: 1 lb., 7 oz.	SHIPPING: 2 lbs

TYPICAL INSTALLATIONS

- (PS) POWER SUPPLY
- (PI) PULSE INPUT
- ◯ INDEPENDENT LOADS
- ● DEPENDENT LOADS
- MOMENTARY STARTING CONTACT
- SUSTAINED STARTING CONTACT
- NORMALLY CLOSED RESET CONTACT
- **O** LOAD DE-ENERGIZED
- **X** LOAD ENERGIZED

DELAYED CONTACTS

Contacts transfer simultaneously when unit "times out" and all digits are zero.

All timers shown in "before start" position. Diagrams shown with power off unless otherwise marked.

Maximum load current through any load carrying contact is 5 amperes.

Pilot light leads are brought out to terminal block. Pilot light can be wired to show practically any desired function; unit energized, cycle running, instantaneous or delayed switch closed, etc.

ON DELAY—Reset on power failure.

INSTANTANEOUS CONTACTS

Contacts are transferred when power supply is energized; transferred back, as shown when de-energized.

SUSTAINED START

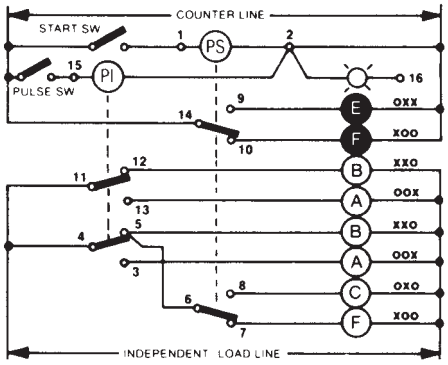

MOMENTARY START/SUSTAINED START

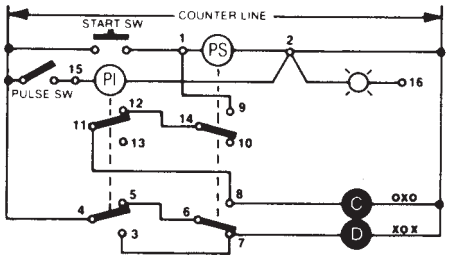

COUNT, PULSE AND REPEAT CYCLE

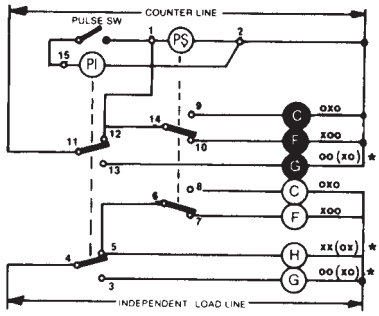

NOTE: Minimum sw open time: 100 ms.
Minimum sw close time: 20 ms.
Output Pulse length — approx. 50 ms.

E48329

Long-Ranger Computing Counter

DIMENSIONS (INCHES/MILLIMETERS)

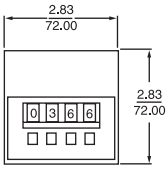

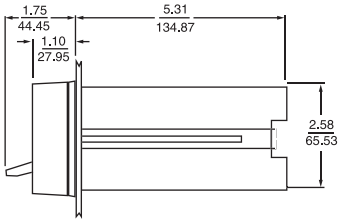

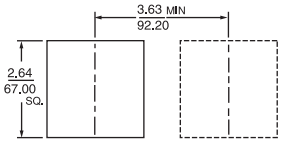

PANEL CUTOUT
SHOWING DISTANCE BETWEEN
ADJACENT CUTOUTS.

WIRING

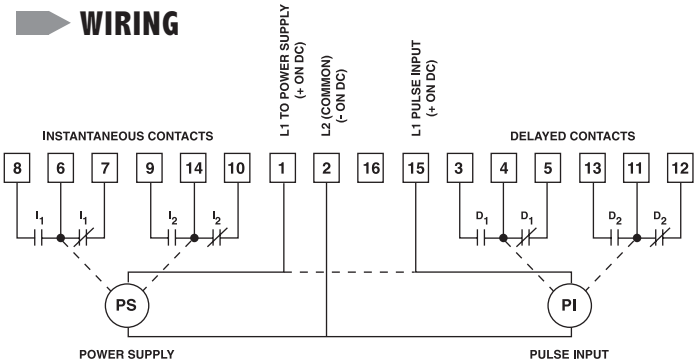

TERMINAL WIRING:
INDICATING MODEL

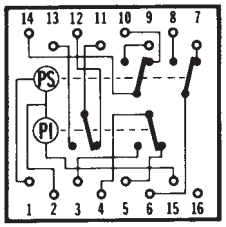

The 366C Directly Replaces 366B & 366A.

Based on a powerful built-in microcomputer, the compact 366 is the most versatile and cost-effective counter ATC has ever built. No industrial counter has ever achieved a higher level of reliability and ruggedness than the 366. It has no moving parts in its electronic logic circuits, only plug-in circuit boards which are computer-tested for reliability and assembled virtually without hand wiring. Its few mechanical components have been selected for reliable service; long life relays with heavy-duty contacts and rotary set point selector switches with extremely low wear characteristics.

CONTACT BOUNCE AND NOISE IMMUNITY: No industrial counter offers greater immunity to noise and contact bounce than the 366. Most noise encountered in typical industrial environments is blocked by such design features as full-wave bridges and a transformer power supply... so effectively that the 366 does not have to be shielded. Furthermore the 366's microcomputer employs redundant sampling logic to detect and reject any noise pulse that manages to penetrate its defenses. Through the same powerful technique, the microcomputer also detects and rejects even severe contact bounce. As a result, the 366 maintains absolute count accuracy and is virtually immune to false starts and reset, even in difficult industrial environments.

COMPUTATION: Through its internal microcomputer, the 366 keeps track of the set point throughout the count cycle. Whenever there is a change in set point, even during a cycle, it instantly recomputes the remaining count and accurately determines the number of counts before count-out. This unique capability is especially valuable in the count-down modes as it allows you to shorten or lengthen a cycle without loss of accuracy.

PROGRAMMABLE DISPLAY: The 366's three-digit cycle progress display will count UP to or DOWN from the set point, depending on the position of an internal jumper. After count-out, the display will either STOP or GO. In the UP & GO program, the display counts up to the set point and continues to count after count-out; in the DOWN & GO mode, it counts down to the set point, then begins to count up (from zero) after count-out.

WIDE RANGE: Each 366 Long-Ranger covers the overall span of 1 to 99,900 counts in three switch-selected ranges of 1 to 999, 10 to 9990 or 12 to 99,900. It can be optimized within any selected range simply by removing appropriate selector knobs (e.g. with the counter in the 1 to 999 range, you can obtain a tamper-proof span of 1 to 99 by setting the left selector at 0 and removing the knob.) To the right of the three-digit display, a counting bar (▬) blinks on each time a pulse is received. At left, a marker (▼)turns on when the delayed relay is energized at count-out.

SELF-DIAGNOSTICS: A built-in diagnostic program lets you verify—without using any test instrument--that the counter's functional circuits are operating properly. Just follow the instructions on the flip-up card, using the counter's own display for the test readout. If all self-test displays are correct, any malfunction is almost certainly due to external circuits or to the relays, not the counter.

COMPACT, PLUG-IN AND DUST-TIGHT: Packaged in a 72mm^2 DIN housing, the 366 occupies 40% less panel space than most other industrial counters. It is a true plug-in counter that can be replaced in seconds without disturbing housing or wiring. The 366 is also fully gasketed and O ring sealed to be dust and water-tight whether panel or surface-mounted.

POSITIVE RESET TIME AND PULSE LENGTH: Digitally clocked by the microcomputer, the 366's reset time is consistently of the same duration, regardless of variations in line voltage, power supply or cycle length. When the 366 operates in repeat-cycle mode, the output pulse is also digitally clocked so that both the time of occurrence and its duration are consistent from cycle to cycle.

TYPICAL INSTALLATIONS

- (PS) POWER SUPPLY
- (PI) PULSE INPUT
- ◯ INDEPENDENT LOADS
- ● DEPENDENT LOADS
- MOMENTARY STARTING CONTACT
- SUSTAINED STARTING CONTACT
- NORMALLY CLOSED RESET CONTACT
- O LOAD DE-ENERGIZED
- X LOAD ENERGIZED

DELAYED CONTACTS

(PI) Contacts transfer simultaneously when unit "times out" and all digits are zero.

All timers shown in "before start" position. Diagrams shown with power off unless otherwise marked.

Maximum load current through any load carrying contact is 5 amperes.

Pilot light leads are brought out to terminal block. Pilot light can be wired to show practically any desired function; unit energized, cycle running, instantaneous or delayed switch closed, etc.

ON DELAY—Reset on power failure.

(PS) INSTANTANEOUS CONTACTS

Contacts are transferred when power supply is energized; transferred back, as shown when de-energized.

SUSTAINED START

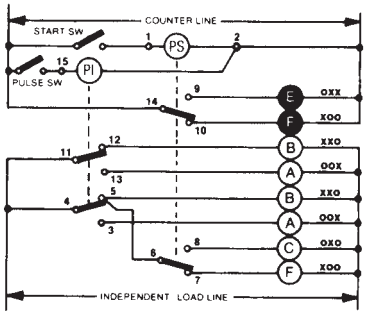

MOMENTARY START/SUSTAINED START

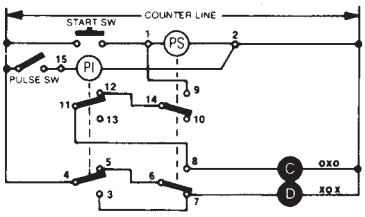

COUNT, PULSE AND REPEAT CYCLE

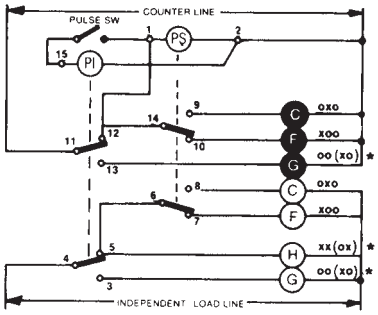

NOTE: **Minimum sw open time: 100** mSEC
Minimum sw close time: 20 mSEC
Output Pulse length — approx. 50 mSEC

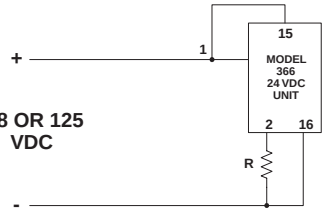

VDC	R	ATC PART NUMBER
48	150 ohm 20 w	3652602500
125	650 ohm 20 w	3652602600

MODEL NUMBER

MODEL NUMBER	366C				P	X
RANGE 1-999, 10-9990 or 12-99900 (switch selected)		400				
Special		000				
VOLTAGE & FREQUENCY						
120 VAC 50-60 Hz			Q			
240 VAC, 50-60 Hz			R			
24 VAC, 50 or 60 Hz			T			
24 VDC			N			
Special			K			
ARRANGEMENT						
Selectable Count Up or Count Down with Display				30		
Selectable Count Up & Go or Count Down & Go with Display				50		
FEATURES						
Basic plug-in unit					P	
Standard unit						X

ACCESSORIES

Surface mounting bracket kit	0353-260-27-00
Retrofit kit	0305-265-61-70

OPERATION

As soon as power is applied to terminals 1 & 2 of the counter, the instantaneous relay is energized and changes the states of its associated contacts (8-6-7 & 9-14-10). The counter then looks for terminal 15 (pulse input terminal) to receive input pulses. When the number of pulses received equals the number of counts set on the front face, the delayed relay energize and changes the states of its associated contacts (3-4-5 & 13-11-12).

The counter is reset by removing power from terminal 1 for at least 60 msec. At reset, both relays revert back to their shelf (without power) state. To the right you will find some typical applications.

SETTING SWITCHES: The three digits are set with the rotary switch knobs beneath each digit. These knobs can be rotated in either direction (CW or CCW), and they are "pull" removable if digit set security is desired. When the 366 is in the "Count Down" mode, changing one or more digits, during counting, will instantly be reflected by an equivalent change in the counter's display. In the "Count Up" mode, changing digits immediately changes the count-out set point. Setting all three digits to zero will cause instant count-out in any display mode.

THE DISPLAY: A high intensity blue fluorescent display consists of three digits and a Counting Bar with a special Count-Out symbol. The Counting Bar appears to the right of the digits and blinks once every count, regardless of range. When the delay relay is energized at count-out, a triangular Count-Out symbol appears to the left of the digits.

REMOVE THE 366C FROM ITS HOUSING TO MAKE CHANGES SHOWN BELOW.

COUNTING DISPLAY MODES: Down & Stop (30)
Up & Stop (30)
Down & Go (50)
Up & Go (50)

CHANGING THE RANGE: The 366B has three ranges:
x1 = Counts single pulses to 999
x10 = Counts every tenth pulse to 9,990
12 = Counts every 12th pulse

Each range is selected using finger force on the white plastic lever behind the front face of the counter. In two of the three possible lever positions, an indicator will appear in a range window located on the front face below and between the rotary switch knobs. When nothing appears in these windows, the counter is understood to be in the x 1 range.

SPECIFICATIONS

MODELS	Display model only for operation at 120, 240 or 24 VAC; and 24 VDC. Unit counts on break (i.e. when count input switch opens). Unit operates in on delay mode only.	
RANGE	Switch-selectable ranges of 1 to 999, 10 to 9990, and 12 to 99900.	
REPEAT ACCURACY	100% (+0 count on all ranges)	
RESET TIME	Clocked at 40 mSEC	
COUNT INPUT		AC
	Max. count rate (symmetrical input)	1000/MIN
	Min. pulse on time	20 mSEC
	Min. pulse off time	30 mSEC
		DC
	Max. count rate (symmetrical input)	2000/MIN
	Min. Pulse on time	15 mSEC
	Min. Pulse off time	15 mSEC
	Bounce Immunity (max. bounce open time)	5 mSEC
	Pulse Contact Requirement	10 mA at line voltage
COUNT CONTROL MODES	Single Cycle	interval or delayed
	Repeat Cycle	pulse (occurrence and duration 50 mSEC clocked)
DISPLAY	Cycle Progress	3-digit display, 0.3 inch, high-intensity, blue programmable modes: DOWN & STOP, DOWN & GO, UP & STOP or UP & GO.
	Count-Out	▼ display; energized at count-out
	Counting Bar	display; blinks on when count switch is closed, when pulse is received
HOUSING	72mm² DIN size; plug-in design; fully gasketed, dust and water-tight in panel mounted installations. NEMA 4 when mounted per installation instructions.	
TERMINALS	16 screw terminals accessible at rear; integral wiring diagram.	

COUNT INPUT	Voltage Model	
	120 VAC Model	Turn On 60V 3.5 mA (nom.) Turn Off 30V 2.4 mA (nom.) 10 mA max. current at 120V
	240 VAC Model	Turn On 120V 3.5 mA (nom.) Turn Off 60V 2.4 mA (nom.) 10 mA max. current at 240V
	24 VAC Model	Turn On 12V 9.5mA (nom.) Turn Off 4V 3.8 mA (nom.) 30 mA max. current at 24V
	24 VDC Model	Turn On 15 VDC 2.5 mA (nom.) Turn Off 3 VDC .5 mA (nom.) 5 mA max. current at 24V
LOAD RELAY	Number	one instantaneous and one delayed
	Type	DPDT, Form C
	Operate	Time 13 ms, max.
	Release Time	Time 10 ms, max.
	Contact Ratings	7A at 120, 240 or 24 VAC, 1/6 HP.
	LIFE	100 million operations (no load)
POWER	120V	95 to 132V, 50/60 Hz inrush–0.3A running–0.06A at 120 VAC
	240V	190 to 264V, 50/60 Hz inrush–0.15A running–0.03A at 240 VAC
	24 VAC	19.2 - 26.4 VAC, 50 or 60 Hz Inrush–1 A Running–0.25 A at 24 VAC
	24 VDC	19.2 - 26.4 VDC, 5% ripple Running - .120 A at 24 VDC
TEMPERATURE RATING	32 to 122°F (0 to 50°C)	
MOUNTING	Standard	hardware is provided for front-of-panel mounting.
	Optional	Surface-mounting brackets with front-facing terminals
WEIGHT	NET: AC - 1 lb., 6oz. DC - 10 oz.	
	SHIPPING: AC - 2 lbs., DC - 1 lb., 4 oz.	

The 376 is available as a **SINGLE PRESET** or a **DUAL PRESET COUNTER.** The Dual Preset Counter can be set as a Batch Counter. Both the Single Preset and the Dual Preset versions have an internal Totalizing Counter which will accumulate counts over numerous cycles. The 376 can be set up for Interval Counting Mode using a separate start signal, and can also be set up for count with Inhibit Mode.

HIGH SPEED COUNTING: The Single Preset 376 counts at a maximum frequency of 10 kHz. In addition to its high speed capabilities, a debounce circuit can be enabled to limit the count frequency to 100 Hz.

COUNTING MODES: The 376 is available as a Single Preset or a Dual Preset Counter. The Dual Preset Counter can be set as a Batch Counter. Both the Single Preset and the Dual Preset versions have an internal Totalizing Counter which will accumulate counts over numerous cycles. The 376 can be set up for Interval Counting Mode using a separate Start Signal, and can also be set up for Count with Inhibit Mode.

INPUTS/OUTPUTS: Two count inputs are available with the 376. These inputs can be set to count Uni- and Bi-directionally. They can also be set to accept Quadrature inputs and can multiply the quadrature signals X1, X2 and X4. Input 2 also operates as the Start input in Interval Mode and as the inhibit input in Count with Inhibit Mode.

These two inputs can be set to accept Current Sinking or Sourcing signals, and there is a High/Low Threshold (Bias) setting allowing the input of TTL level signals.

Two types of outputs are available. The Relay outputs are rated for 7 A at 250 VAC and 30 VDC. The NPN Transistor outputs are current sinking and are rated for 100 mA at 30 VDC. These outputs are field replaceable. Each output can be set to either Latch ON, Remain ON for a Time Delay, or turn OFF at a Preset.

SCALE FACTOR: A Prescale value can be set which allows the operator to view and set counts using real units of measure. The Prescale value is a multiplier which is applied to the count inputs to determine the display and preset values. The Prescale value can be set from 0.00001 to 9.99999. The 376 also allows setting of the decimal point position in any of 6 positions.

RESETTING THE COUNTER: The Counter can be reset using the Reset key on the panel or by using the external Reset Inputs. There are three current sinking external inputs. Each one is dedicated to resetting the Process, Batch and Totalizing Counters. In addition, the 376 can be set to either retain its count or reset upon power failure.

OPERATOR PANEL AND HOUSING: The 376 operator panel is dust and water tight and measures a compact 72mm^2. The panel features a high intensity blue vacuum fluorescent display. The display uses 8 digits for its English language operator prompts and 6 digits to display the count value. For operator use, there are 4 snap action keys which allow the operator to easily view Process Count, Batch Count, Totalizer Count, Presets, Scale Factor, Output Settings and Decimal Point position. The 376 can be set to lock out various displays from the operator. One key is dedicated to Resetting the Counter. This key can also be locked out.

SET-UP: Set-up of the 376 is accomplished using 16 DIP switches which are located inside the unit. These DIP switches give a visual indication of how the Counter is set-up, and eliminate the use of complex programming codes. Field replacement of the unit is quick. To replace a unit, remove the old unit from its housing, set the DIP switches in the new unit to the same positions, and plug the new unit in. It's that simple.

AUXILIARY POWER SUPPLY: To power sensor and encoder inputs, a regulated 12 VDC auxiliary power supply is provided. This supply can provide 120 mA of current, and is short circuit

E48329

Digital Counter

- 6 Digit Count Display
- Single Preset, Dual Preset, Batch Counting Modes
- Interval Counting Mode with Separate Start
- Count with Inhibit Mode
- Internal Totalizing Counter
- Prescaler 0.00001 to 9.99999
- 6 Decimal Point Positions
- High Intensity Blue V-F Display
- Easy English Language Operator Prompts
- 72mm^2 Panel - Dust, Water Tight
- 4 Snap-Action Keys
- Plug-in Housing (Quick Replacement)
- Sinking, Sourcing, TTL Inputs
- Single, Bidirectional, and Quadrature (X1, X2, X4) Counting
- Relay or Transistor Outputs
- Outputs Latched, Timed, or Off at Presets
- Regulated 12 VDC Aux. Power Supply

OPERATION

The Series 376 Preset Counter is a predetermining counter that will count high speed unidirectional, bi-directional, or quadrature input signals, and will activate an output when the predetermined preset value is reached. The unit is available in both Single and Dual Preset models, and includes an internal totalizer. Also, the 376 counter will operate as a Batch Counter using the second preset as a Batch Preset. The Series 376 comes with a variety of counting modes. The operation of each counting mode is described below.

COUNT UP FROM ZERO TO A GIVEN PRESET: The Output in the Counter is activated when the Count equals the Preset. In the Dual Preset Model, the Counter counts up from zero and Output 1 is activated when Preset 1 is reached and Output 2 is activated when Preset 2 is reached.

COUNT DOWN FROM A PRESET TO ZERO: When Reset is pressed, the Counter is set to the Preset Value. When the Count Value equals zero, the Output is activated. In the Dual Preset Model, the Counter counts down from the High Preset value and activates one Output when it reaches the Low Preset Value; the other Output is activated when the Counter counts down from the Low Preset Value and reaches zero.

INTERVAL MODE: In this mode, the Counter will not begin counting until Input 2 is turned ON, indicating a Start Signal. Once the Start Signal is received, the Output will turn ON and the Counter will count. The Out- put will then turn OFF at the preset or zero. The Start Signal must be activated each time the process is reset, even when the Counter is set to Auto Reset

BATCH MODE - DUAL PRESET MODELS ONLY: In the Batch Mode, Input 1 is the Count input and will turn ON at Preset 1. Each time Output 1 turns ON, the Batch Counter will record a count. When the Batch Counter value equals the value in Preset 2, Output 2 will turn ON. The Batch Mode must be Manually Reset (unless T2 is set to 00.00 (.5 w/ AR) for Auto Reset).

TIMED OUTPUTS: The Outputs can be delayed before turning OFF by setting time delay values for each output. Once the Preset is reached, a time delay, according to the time value set, will occur before the outputs turn OFF. This value can range from 0.00 SEC (OFF at Preset) to 99.99 SEC (Latched ON). In addition, the outputs can also be set to turn OFF upon reaching the preset for the other output in the Dual Preset Model.

SCALE FACTOR: A Prescale value can be set to allow viewing and setting counts using real units of measure. The Prescale value is a multiplier which is applied to the count in-put(s) to determine the count display and preset values. The Prescale value can be set from 0.00001 to 9.99999. In addition, the decimal point can be set on the display to any one of 6 positions.

DIMENSIONS (INCHES/MILLIMETERS)

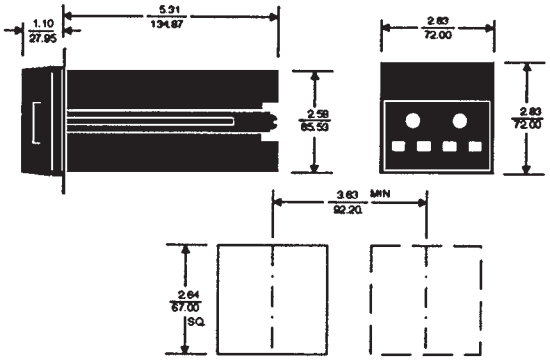

PANEL CUTOUT
SHOWING DISTANCE BETWEEN
ADJACENT CUTOUTS.

WIRING

376 TERMINAL WIRING

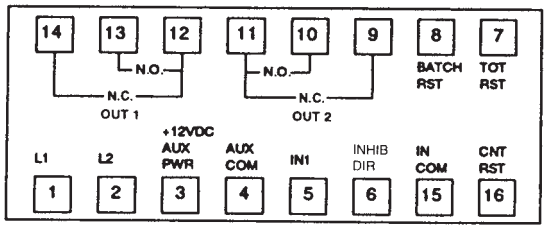

OUTPUT WIRING

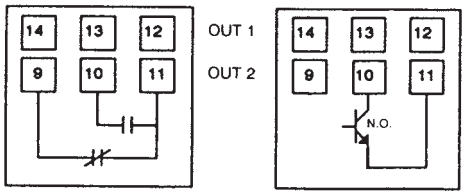

RELAY *

* (Contacts to be wired with same polarity)

NPN TRANSISTOR
(Open Collector)

COUNT INPUT WIRING – *SINK* INPUT SIGNAL

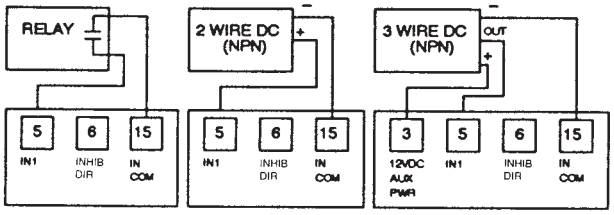

COUNT INPUT WIRING – *SOURCE* INPUT SIGNAL

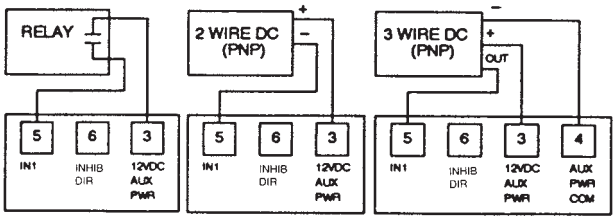

SPECIFICATIONS

MODELS	Single and Dual Preset with either NPN (Solid State) or Relay Outputs.	
COUNT INPUT MODES (SWITCH SELECTABLE)	Bi-Directional	
	Quadrature X1	
	Quadrature X2	
	Quadrature X4	
	Count with Inhibit	
	Interval with Start Input	
SETTINGS (FRONT OF PANELS)	Presets	1 to 999,999
	Scale Factor	0.00001 to 9.99999
	Timed Outputs	00.01 to 99.98 SEC Latched Off at Preset
	Decimal Position	0 to 6
OPERATING FEATURES (SWITCH SELECTABLE)	Count Up or Count Down	
	Count/Go or Count/Stop	
	Sink or Source Count Input	
	High or Low Threshold (Bias)	
	Auto Reset at	High preset (Count Up) Zero (Count Down) After Timed Output
	Totalizer	
	Dual Preset/Batch mode	
	Security lockout	Access to Presets Access to T1, T2, SF, DP Front panel Reset
	Reset on Power Up	
COUNT INPUTS	Sink - 9.4K ohm pull up	
	Max. current = 1.25 mA	
	Source - 4.7K ohm pull down	
	Max. voltage = 30 VDC, @ 7 mA	
	High Bias	ViL = 5.5 V Max. ViH = 7.5 V Min.
	Low Bias	ViL = 1.5 V Max. ViH = 3.75 V Min.
	Debounce - reduces count Input 1 to 100 Hz (Input 2 no debounce.)	
	Interval start requires 15 mSEC minimum pulse. (Can be momentary or sustained.)	

MAXIMUM COUNTING FREQUENCY	10 kHz	Count Up Mode
	9 kHz	Count Down Mode
	Reduce by 3 kHz when Totalizing Counter is enabled	
	Reduce by 2 kHz when Auto Reset is enabled	
	Min. pulse 10 µSEC on; 90 µSEC off.	
REMOTE RESETS	Count, Batch, Totalizer	
	Min. 15 mSEC pulse	
	Pulled to 5V via 8K ohm res.	
	Active Low. ViL = 0.5V Max.	
	Max. current = .625 mA.	
OUTPUT - SOLID STATE	Current Sinking	
	I sink = 100 mA Max.	
	VoL = 1.0 VDC Max.	
	Max. Voltage = 30 VDC	
OUTPUT - RELAY	Life	100 million operations (no load)
	Contact Rating	7 amp @ 30 VDC or 250 VAC, 1/4 HP
DC SUPPLY	12 VDC Regulated, ±4% Max. current = 120 mA	
MEMORY	Non Volatile EEPROM	
	230,000 Power Losses MIN	
	10 Year Retention	
DISPLAY	8 Digit, 14 Segment	
	5 mm x 4.1 mm	
	Blue Vacuum Fluorescent	
OPERATING TEMPERATURE	0° F to 140° F	
HUMIDITY	0% to 80% RH Non-condensing	
POWER REQUIREMENTS	120 VAC	95 - 132 VAC
	240 VAC	190 - 264 VAC 50 / 60 Hz
	Max. Power = 8 VA	
TERMINALS	16 screw terminals located accessible from rear	
HOUSING	Plug in, 72mm^2 DIN Fully Gasketed, Dust and Watertight.	
WEIGHT	1.47 lbs.	SHIP 2.0 lbs.

MODEL NUMBER

MODEL NUMBER	376B			50		
PRESETS Single Preset		100				
Dual Preset (with batch)		200				
VOLTAGE & FREQUENCY						
120, 50/60 Hz			Q			
240, 50/60 Hz			R			
FUNCTION						
Counter with Sealing				50		
OUTPUT TYPE						
NPN Transistor					L	
Relay					R	
FEATURES						
Standard unit						X
Special						K

ACCESSORIES

Surface mounting bracket kit	353-260-27-00:
Round Cutout Retrofit kit	305-265-61-70:
Square Cutout Retrofit kit	376-320-01-00:

For prices and further information, consult factory.

SETTING THE COUNTER

To set the Counter, there are four push-button keys located on the front of the unit. These buttons are provided to allow the user to select, change and save various values. These key operations are dependent on the DIP Switch settings of the unit (see below).

In addition to the normal counting modes of the unit, the 376B has the capability of operating as a Batch Counter and a Totalizer Counter. When these modes are activated, the functions of the Counter change accordingly. Pressing the RESET key, with the Count, Batch, or Totalizer value displayed, will reset that value.

This figure shows the front of panel with the Process Count value displayed. Pressing SELECT will scroll through a menu of options.

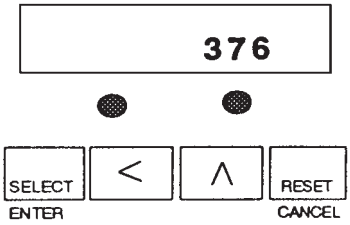

After one of these options is displayed for a second, the value for this option is automatically displayed. Once the option value is displayed, pressing the < key will move one digit to the left and the ^ key will increment the value by one. Then the SELECT key must be pressed to save the new value. Pressing RESET will return to the Process Count display. If SELECT is not pressed after a change, RESET will return to the count display and the change will not be entered.

Selections in addition to Process Count are:

Totalizer - counts accumulated since last Totalizer Reset. When the total counts exceed 99,999,999 the Totalizer will blink Pressing RESET will scroll through the actual value, pressing RESET a final time will reset the value to zero.

00000376

Batch - number of cycles elapsed in Batch Mode.

B 1

Preset 1/Preset 2 - value compared with the actual count. When the Preset Value is displayed, the Preset LED on the panel will light, indicating which preset is displayed.

000500

Prescale - this factor will scale the input counts. The count signal is multiplied by the prescale value to determine the count display. The prescale value can range from 0.00001 to 9.99999.

1.00000

NOTE: If the prescale value is greater than 1, the out put will energize when the count value passes the preset value. Output 1/ Output 2 - time delay setting for outputs.

Decimal - the number of decimal positions for the display.

LATCHED

When the Counter reaches its Presets, the Outputs will activate and the LEDs on the panel will flash, indicating which output is activated.

DP 0

DIP SWITCH SETUP-To set up the Counter for operation, a series of DIP switches located inside the unit must be set.

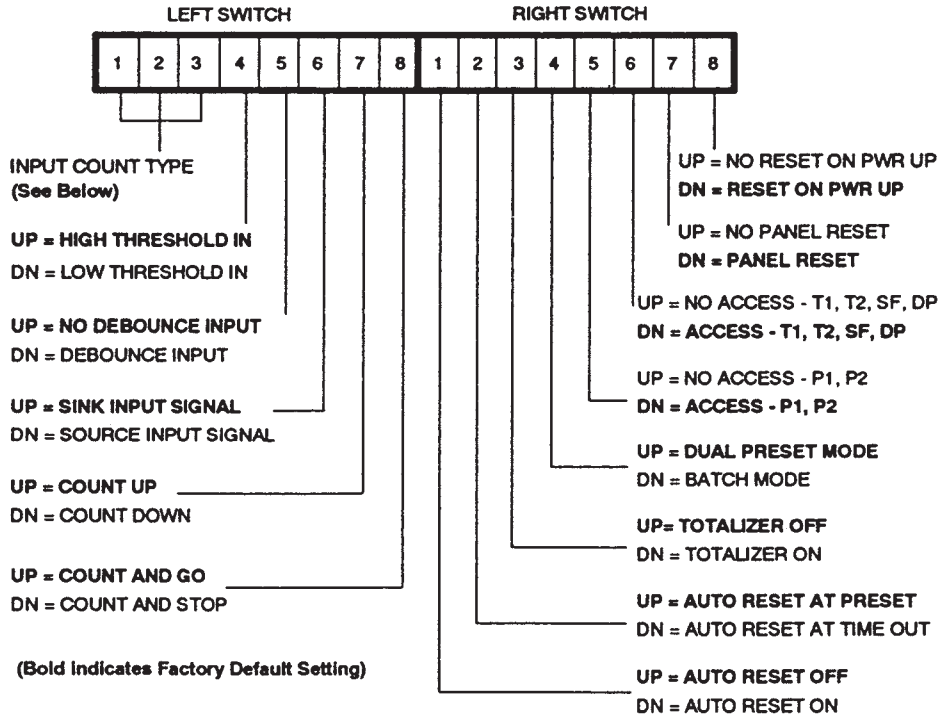

INPUT COUNT TYPE	LEFT SWITCH 1	2	3
BI-DIRECTIONAL COUNTER	UP	UP	UP
QUADRATURE COUNTER	DN	UP	UP
QUADRATURE COUNT X2	UP	DN	UP
QUADRATURE COUNT X4	DN	DN	UP
COUNT WITH INHIBIT	UP	UP	DN
INTERVAL MODE (COUNTER WITH START SWITCH INPUT)	DN	UP	DN

CONTROL 1 OUTPUT SPECIFICATIONS	Contact Rating (SPST): 5a @ 230VAC / 30VDC resistive
	SSR Drive (Voltage Pulse): 18VDC 20ma
	Current: 0/4 to 20ma dc (loop impedence 500 ohms max
	Voltage: 0 to 5/10 VDC (load resistance 10K ohms min)
ALARM 2 OUTPUT SPECIFICATION	Contact Rating (SPST): 5a @ 230VAC / 30VDC resistive
	SSR DRIVE: 12VDC 20ma
FUNCTIONAL SPECIFICATION	Control Action: PID, On-Off
	Proportional Band (P): 0.0 to 400.0 deg
	Integral Time (I): 0 to 3600 sec
	Derivative Time (D): 0 to 200 sec
	Cycle Time: 0.1 to 100.0 sec
	Hysteresis Width: 0.1 to 99.9 deg
	Manual Reset Value: -99.9 to 99.9 deg
HEAT COOL PID	Control Action: PID
	Cycle Time: 0.1 to 100 sec
	Proportional Gain: 0.0 to 400.0 deg
	Deadband: Programmable from setpoint low limit to setpoint high limit
ALARMS	Modes: Deviation high/low, Absolute high/low, band, sensor break
	Hysterisis: 0.1 to 99.9 deg
RAMP SOAK	Ramp Rage: 1 to 9999 deg/hr.
	Soak Time: 0 to 1440 min
	Soft Start Time: 0 to 999 min.
SUPPLY VOLTAGE	85 to 270V AC/DC (50/60 Hz)
POWER CONSUMPTION	6VA max @ 230 VAC
RETRANSMISSION	Current: 0/4 to 20ma DC (loop impedence 500 ohms max)
	Voltage: 0 to 5/10V DC (load resistance 10k ohms min) Update Rate: 100msec
SERIAL COMMUNICATION	Interface Standard: RS485
	Communication Address: 1 to 99, maximum of 32 units per line
	Transmission mode: Half duplex
	Transmission protocol: MODBUS RTU
	Transmission distance: 500 m maximum
	Transmission speed: 9600, 4800, 1200, 600, 300 bits/sec.
TEMPERATURE	Operating: 0 to 50°C (32 to 122°F)
	Storage: -20 to 75°C (-4 to 167°F)
HUMIDITY (NON CONDENSING)	95% RH
WEIGHT:	6.4 oz.
PROTECTION LEVEL	IP65 for faceplate

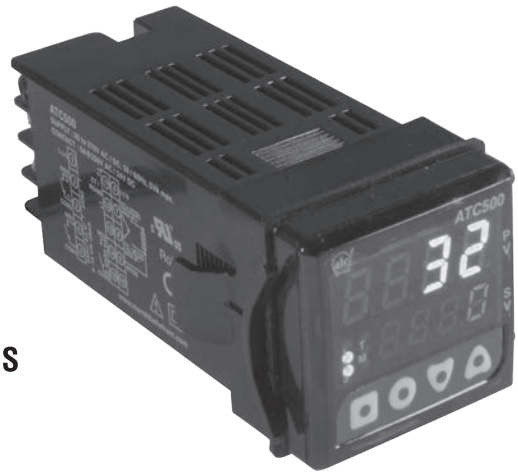

E339488

1/16 DIN Advanced, Full Featured PID Temperature Controller

- Dual Display, 4 digit, 7 segment LED
- TC/RTD Input, Analog Input
- ON/OFF, PID, PID Autotune
- C/F degrees selectable
- Heat Cool PID
- Ramp Soak
- Soft Start
- 1/16 DIN (48 x 48 mm)

SPECIFICATIONS

DIGITS	4 digit, 7 segment LED Dual Display Height of Upper display: 0.3785" Height of Lower display: 0.2720"
LED INDICATIONS	Relay On, Alarm, Manual Mode, Tune
INPUTS	Thermocouple (J,K,T,R,S,C,E,B,N,L,U,W) Platinel II, RTD (Pt100) DC Analog Inputs (-5 to 56mv, 0 to 10v, 0 to 20 ma)
SAMPLING TIME	200 ms
INPUT FILTER (FTC)	0.2 to 10.0 sec
RESOLUTION	1/0.1 deg for TC/RTD only Fixed 1 deg resolution for R&S Type TC)
	Decimal point position selectable: 1/0.1/0.01/0.001 for analog input
TEMPERATURE UNIT:	C/F deg selectable
INDICATION ACC:	For TC inputs 0.25% of F.S. ± 1° R&S type TC inputs 0.5% of F.S. ± 2 deg (20 min of warm up time for TC inputs) For RTD inputs 0.1% of F.S. ± 1 deg For Analog Input ± 0.5%, ± 1 digit (F.S. = Full Scale)

COMPLIANCE

IEC/EN 61326 (EMI/EMC)

IEC/EN 61010 Revision 3 2010 Edition (Safety)

UL 61010 Revision 3 2010 Edition (Safety)

DIMENSIONS

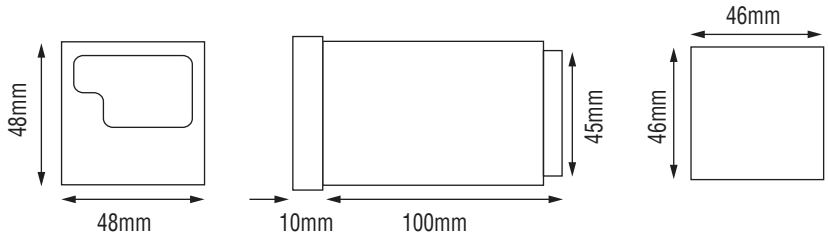

CURus Cable Size (AWG): 16-13

Stud Hole for Lug (inch): 0.137

Tightening Torque (lb-inch): 7

TERMINAL CONNECTIONS

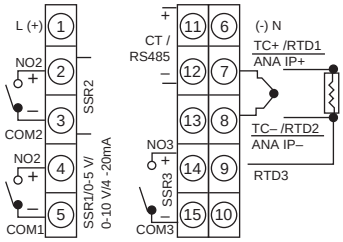

ORDERING INFORMATION

PART NO.	OUTPUT 1	OUTPUT 2	OUTPUT 3	COMMUNICATION (RS485)	SUPPLY VOLTAGE
ATC500000100	Relay	Relay	Relay		85-270V AC/DC
ATC500000400	Relay	Relay	Relay	Yes	85-270V AC/DC
ATC500010500	Relay	12V DC SSR	12V DC SSR	Yes	85-270V AC/DC
ATC500200100	4-20ma	Relay	Relay		85-270V AC/DC
ATC500200400	4-20ma	Relay	Relay	Yes	85-270V AC/DC
ATC500300100	0-10V	Relay	Relay		85-270V AC/DC
ATC500300400	0-10v	Relay	Relay	Yes	85-270V AC/DC

Note: Other models, options and accessories available. Please consult factory.

FUNCTIONAL SPECIFICATIONS

Control Action	1) PID 2) ON-OFF
Proportional Band (P)	1.0 to 400.0°
Intergral Time (I)	0 to 9999 sec.
Derivative time (D)	0 to 9999 sec.
Cycle Time	0.1 to 99.9 sec.
Hysteresis Width	0.1 to 99.9°
Manual Reset Value	-19.9 to 19.9°

HEAT-COOL

Control Action	PID (with auto-tuning)
Proportional Band-Cool	0.0 to 400.0°
Cycle Time-Cool	0.1 to 99.9 sec.
Dead Band	Programmable from setpoint low limit to setpoint high limit.

SETTINGS FOR ALARM OUTPUT

Modes	Deviation, Absolute
Hysteresis	0.1 to 99.9°

SUPPLY VOLTAGE	85 to 270V AC/DC (50/60 Hz)
POWER CONSUMPTION	6 VA max @ 230V AC
TEMPERATURE	Operating: 0 to 50°C Storage: -20 to 75°C
HUMIDITY (NON CONDENSING)	95% RH
WEIGHT	5 Oz.
PROTECTION LEVEL	IP65 for faceplate
COMPLIANCE	IEC/EN 61326 (EMI/EMC) IEC/EN 61010 Revision 3 2010 Edition (Safety) UL 61010 Revision 3 2010 Edition (Safety)

E339488

1/16 DIN Temperature Controller

- Dual Display, 4 digit, 7 segment LED
- TC/RTD
- PID ON/OFF Control
- 2 Setpoints
- °C/°F selectable
- Field selectable Control Output (Relay or SSR)
- Auxiliary Output: Relay / SSR
- Easy to Use

SPECIFICATIONS

DIGITS	4 digit, 7 segment LED Dual Display Height of Upper display: 0.3785" Height of Lower display: 0.2720"
LED INDICATIONS	Relay On, Tune, Soak Time
INPUTS	Thermocouple (J,K,T,R,S) / RTD (Pt100)
SAMPLING TIME	250ms
INPUT FILTER (FTC)	0.2 to 10.0 sec
RESOLUTIION	0.1/1 (Fixed 1° for R & S type TC input)
TEMPERATURE UNIT	°C / °F selectable
INDICATION ACCURACY	For J, K, & T inputs: 0.25% of F.S. ±1° For R & S inputs: 0.5% of F.S. ±2° (20 min of warm up time for TC inputs) For RTD inputs: 0.1% of F.S. ±1° (F.S. = Full Scale)

OUTPUT SPECIFICATIONS

CONTROL	1
Contact Rating:	5A @250V AC / 30V DC, resistive
SSR Drive (Voltage Pulse):	12V DC ±10%,m50mA
ALARM	1
Contact Rating:	5A @ 230V AC / 30V DC, resistive
SSR Drive	12V DC (50mA)

DIMENSIONS

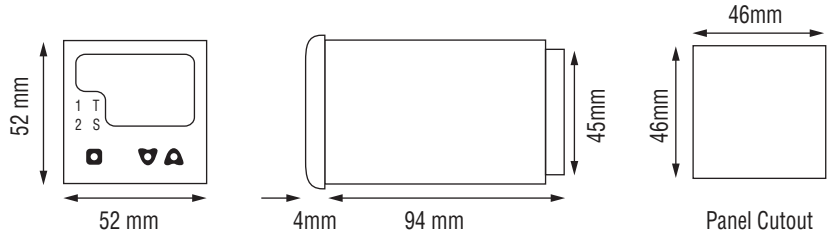

TERMINAL CONNECTIONS

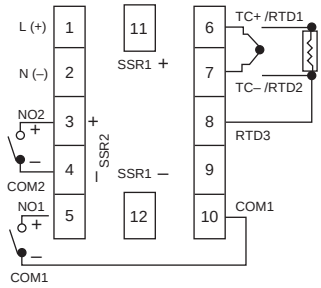

INPUT RANGES (TABLE 1)

FOR RTD

Input		Ranges	
Resolution		1	0.1
Pt100	°C	-150 to 850	-150 to 850
	°F	-238 to 1562	-199 to 999

FOR THERMOCOUPLE

Input		Ranges	
Resolution		1	0.1
J	°C	-199 to 750	-199 to 750
	°F	-328 to 1382	-199 to 999
K	°C	-199 to 1350	-199 to 999
	°F	-328 to 2462	-199 to 999
T	°C	-199 to 400	-199 to 400
	°F	-328 to 750	-199 to 750
R & S	°C	0 to 1750	N/A
	°F	32 to 3182	N/A

ORDERING INFORMATION

PART NO.	CONTROL OUTPUT	AUXILARY OUTPUT	SUPPLY VOLTAGE
ATC550S00000	Relay 12V DC SSR	Relay	85-270V AC/DC
ATC550S10000	Relay 12V DC SSR	12V DC SSR	85-270V AC/DC

Note: Other models, options and accessories available. Please consult factory.

SPECIFICATIONS

CONTROL VOLTAGE	DC Models (SDA) 4—32 VDC AC Models (SAA) 85—240 VAC
PICK UP VOLTAGE	SDA Models, 4V Max SAA Models, 85V Max.
DROP OUT VOLTAGE	SDA Models, 1V Min. SAA Models, 40V Min.
PEAK REPETITIVE OUTPUT VOLTAGE	600 Vrms Max.
OFF STATE LEAKAGE CURRENT	10mArms Max.
ON STATE VOLTAGE DROP	1,5 Vrms Max.
DIELECTRIC STRENGTH	2500 Vrms, 1 Min. (Input-Output-Case)
ISOLATION RESISTANCE	100 MΩ/DC 500 V (Input-Output-Case)
RESPONSE TIME	1/2 Cycle + 1 mS Max.
TEMPERATURE	Operate -20° to +80°C Storage -30° to +100°C
AGENCY APPROVALS	SDA1 Models Only: Underwriters Lab's UR File No. E165828
WEIGHT	2 oz.

DC and AC Inputs – Solid-State Relay

- 15, 25, 40A @ 50-240 VAC Outputs
- 4 to 32 VDC and 85 to 240 VAC Input
- LED Operation Indicator (SD Only)
- Compatible Heat Sinks

HEAT SINK INFORMATION: To achieve the rated output current loads for all ATC solid-state relays, they must be mounted to a heat sink.

WIRING

SDA1, SAA1

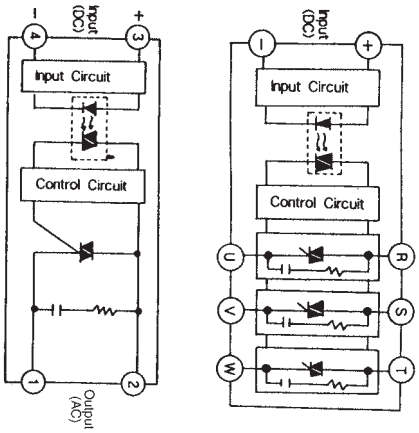

MODEL	A	B	C	D	E	F
NO118(1)-60	60	90	100	60	N/A	48
NO118(2)-200	60	90	100	200	97	N/A

DIMENSIONS (MILLIMETERS)

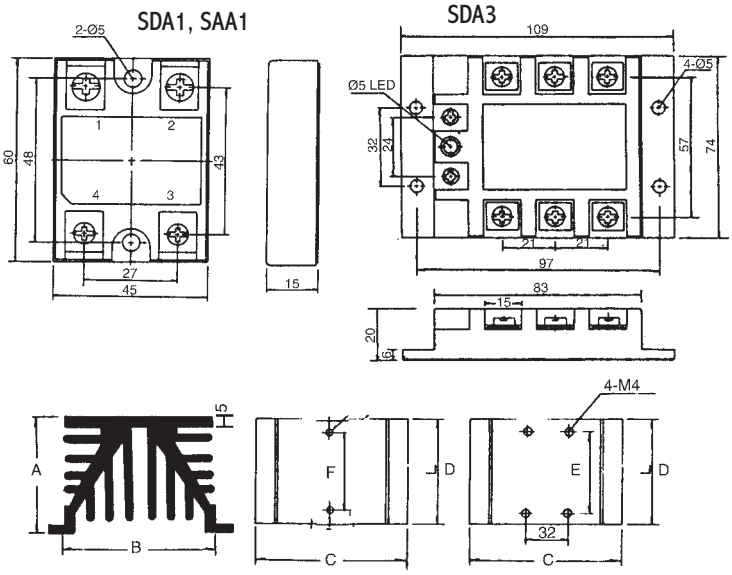

ORDERING INFORMATION

MODEL NUMBER	UL RECOGNIZED	INPUT VOLTAGE	OUTPUT VOLTAGE	OUTPUT AMPS	PHASE
SDA1-215Z	Yes	4-32 VDC	50-240 VAC	15	Single
SDA1-225Z	Yes	4-32 VDC	50-240 VAC	25	Single
SDA1-240Z	Yes	4-32 VDC	50-240 VAC	40	Single
SAA1-215Z	Yes	85-240 VAC	50-240 VAC	15	Single
SAA1-225Z	No	85-240 VAC	50-240 VAC	25	Single
SAA1-240Z	No	85-240 VAC	50-240 VAC	40	Single
SDA3-240Z	No	4-15 VDC	50-240 VAC	40	Three
SDA3-440Z	No	4-15 VDC	50-460 VAC	40	Three
NO118 (1)-60	No	Heat Sink for SDA1 and SAA1 Models			
NO118 (2)-200	Yes	Heat Sink for SDA3 Models			
		Other Relays and Heat Sinks Available, Consult Factory.			

This accessory part comprises of a bracket and an integral terminal strip. The bracket facilitates surface mounting while the strip relocates all terminals where they are conveniently accessible from the front.

Surface Mounting Brackets

DIMENSIONS (INCHES/MILLIMETERS)

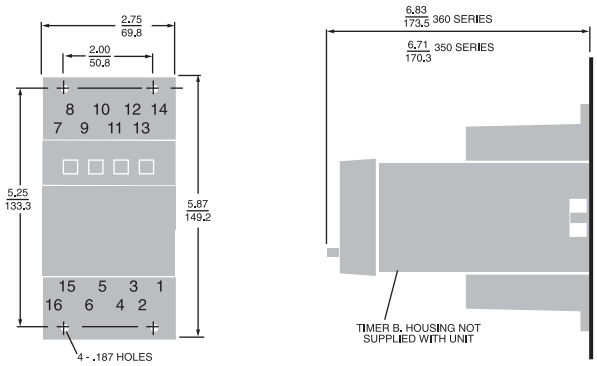

FOR SERIES 353, 354, 355, 356, 365, 366, 376, 385

Order Part. No. 353-260-27-00

8 and 11-Pin Base Mount/Din Rail Sockets

1/16 DIN TIMER ACCESSORIES–8 PIN ACCESSORIES

000-825-85-00

8-Pin surface DIN rail socket. Recommended for use with all 8-pin octal plug-in devices when surface mounting or DIN rail mounting.

UL #E72711
US & CAN.

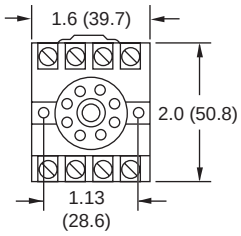

319-261-45-00

Plug-on socket kit (8 pin). Recommended for use with all 8-pin octal plug-in devices. Panel mounting only. Attach the wires to the solderless connector with a crimping tool.

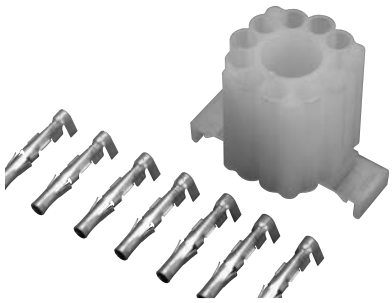

405-320-02-00

Panel Mounting bracket. Recommended for use with all 1/16 DIN timers when panel mounting. Use in conjunction with the 8-pin or 11-pin panel socket with rear facing terminals.

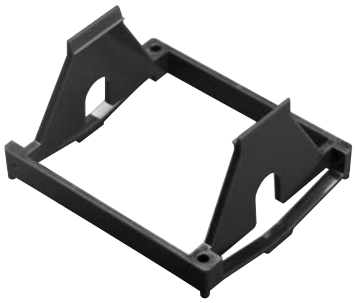

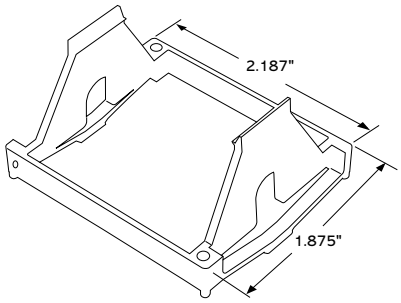

407-025-13-00

Hold-down for 405C/409B Series and part #000-825-85-00. Two (2) needed for proper installation.

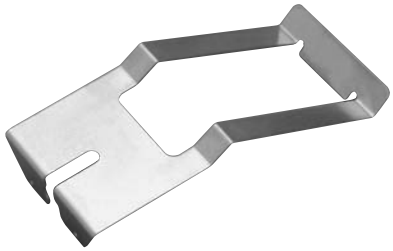

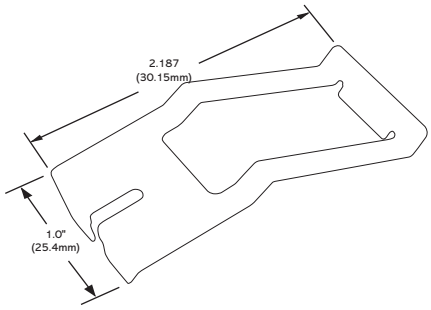

1/16 DIN TIMER ACCESSORIES–8 PIN ACCESSORIES

000-825-86-00

11-Pin surface DIN rail socket. Recommended for use with all 11-pin octal plug-in devices when surface mounting or DIN rail mounting.

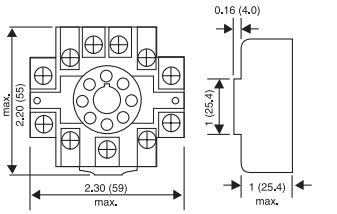

70-463-1

11-Pin Socket, DIN/Panel Mount, with screw terminals & Clamping plates.

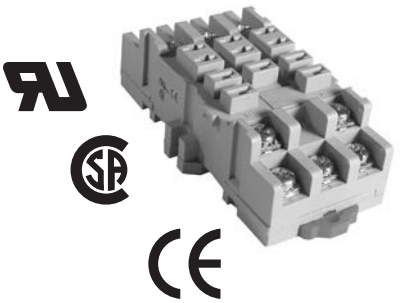

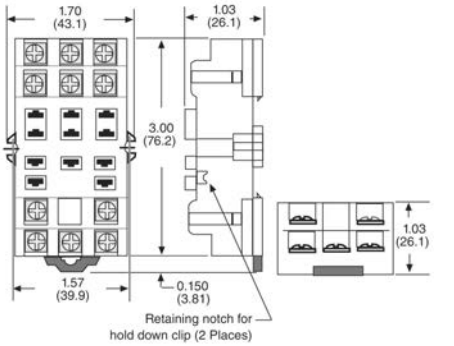

314-260-07-00

Plug-on socket kit (11-pin). Recommended for use with all 11-pin octal plug-in devices. Panel mounting only. Attach the wires to the solderless connector with a crimping tool.

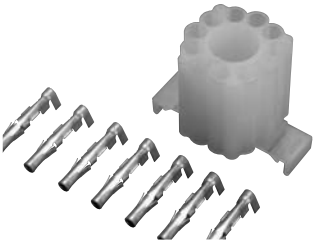

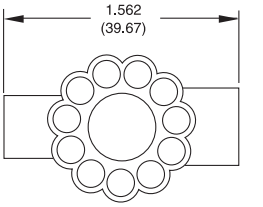

405-025-07-00

Hold down for 407C Series and part #000-825-86-00.
Two (2) needed for proper installation.

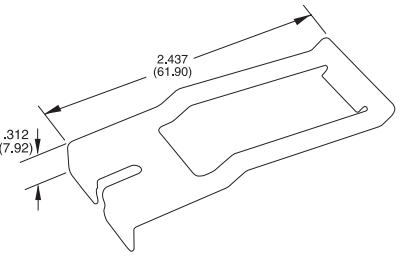

101026105

Recommended for use with all the ATC Diversified Electronics family of "remote adjustable" timers. Proper spacing is maintained for UL and CSA applications. This linear taper potentiometer has a non-conductive shaft attached to the internal conductive plastic wafer. The brass bushing is 3/8" x 32NEF and accepts adjustment hardware 1000540070, 100054071.

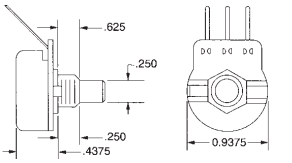

100054073

Recommended for use with any adjustment or switch having a 1/4" shaft. This knob slips over the shaft and is secured in place by a #6-32 set screw. The knurled, mirror finished, black thermostat knob has a white pointer line for reference.

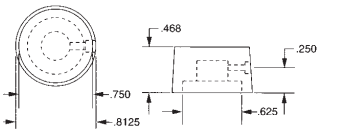

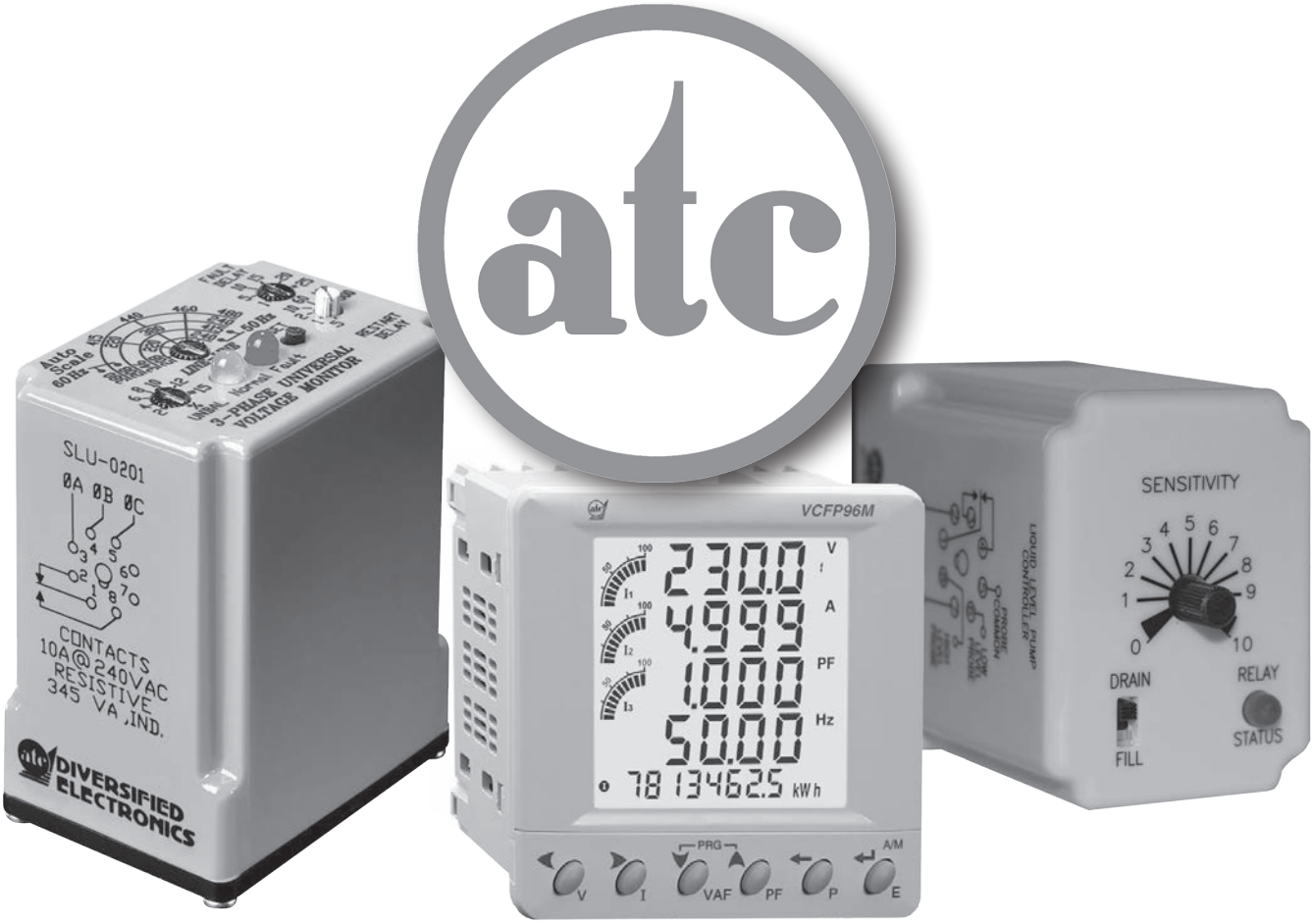

DIVERSIFIED ELECTRONICS

MOTOR PROTECTION

FEATURE MATRIX

MODEL NUMBER	PHASE LOSS	UNDER VOLTAGE	PHASE SEQUENCE	NOMINAL LINE VOLTAGE PHASE-TO-PHASE 50/60 HZ										ENCLOSURE				RESET		LED INDICATOR	UL Recognized	UL Listed	CSA Certified
				120	208	220	230	240	380	440	460	480	575	STYLE A	STYLE B	STYLE E	STYLE N	AUTOMATIC	MANUAL				
PRA-100-AFA			●		●	●	●	●	●	●	●	●		●				●		●			
PRA-100-AFN			●		●	●	●	●	●	●	●	●					●	●		●			
PRA-100-AFE			●		●	●	●	●	●	●	●	●				●		●		●			
SLA-120-AFN	●	●	●	●													●	●			●		
SLA-120-ALA	●	●	●	●										●				●					
SLA-120-ALE	●	●	●	●												●		●		●		●	●
SLA-120-ALER	●	●	●	●												●			●	●		●	●
SLA-120-ASA	●	●	●	●										●				●		●	●		
SLA-120-ASB	●	●	●	●											●			●		●			
SLA-208-AFN	●	●	●		●												●	●			●		
SLA-220-AFN	●	●	●			●											●	●			●		
SLA-230-ALA	●	●	●				●							●				●		●	●		
SLA-230-ALE	●	●	●		●	●	●	●								●		●		●		●	●
SLA-230-ALER	●	●	●		●	●	●	●								●			●	●		●	●
SLA-230-ASA	●	●	●		●	●	●	●						●				●		●	●		
SLA-230-ASB	●	●	●		●	●	●	●							●			●		●			
SLA-240-AFN	●	●	●					●									●	●			●		
SLA-380-ALE	●	●	●						●							●		●		●		●	●
SLA-380-ALER	●	●	●						●							●			●	●		●	●
SLA-380-ASA	●	●	●						●					●				●		●			
SLA-440-AFE	●	●	●							●						●		●		●		●	●
SLA-440-ALE	●	●	●							●	●	●				●		●		●		●	●
SLA-440-ALER	●	●	●							●	●	●				●			●	●		●	●
SLA-440-ASA	●	●	●							●	●	●		●				●		●			
SLA-460-AFE	●	●	●								●					●		●		●		●	●
SLA-480-AFE	●	●	●									●				●		●		●		●	●
SLA-575-AFE	●	●	●										●			●		●		●		●	●
SLA-575-ALE	●	●	●										●			●		●		●		●	●
SUA-120-ALA	●	●	●	●										●				●		●	●		●
SUA-120-ALAU	●	●	●	●										●				●		●		●	●
SUA-230-ALA	●	●	●		●	●	●	●						●				●		●	●		●
SUA-230-ALAU	●	●	●		●	●	●	●						●				●		●		●	●
SUA-380-ASA	●	●	●						●					●				●		●	●		●
SUA-440-ASA	●	●	●							●	●	●		●				●		●	●		●

All models available with fixed operating voltages. Consult factory.

FEATURE MATRIX

MODEL NUMBER	PHASE LOSS	UNDER VOLTAGE	OVER VOLTAGE	PHASE UNBALANCE	PHASE SEQUENCE	ADJUSTABLE DELAY	NOMINAL LINE VOLTAGE PHASE-TO-PHASE 50/60 HZ										STYLE E	RESET		LED INDICATOR	CONTROL VOLTAGE REQUIRED	UL LISTED
							120	208	220	230	240	380	440	460	480	575		AUTOMATIC	MANUAL			
PBC-120-ALE	●	●	●				●										●	●		●		●
PBC-230-ALE	●	●	●					●	●	●	●						●	●		●		●
PBC-400-ALE	●	●	●									●					●	●		●		●
PBC-440-ALE	●	●	●										●	●	●		●	●		●		●
PBC-480-ALE	●	●	●										●	●	●		●	●		●		●
PBC-575-ALE	●	●	●													●	●	●		●		●
PBC-120/208-ALE	●	●	●					●									●	●		●		●
PBC-220/380-ALE	●	●	●									●					●	●		●		●
PBC-277/480-ALE	●	●	●												●		●	●		●		●
PBD-120-ALE	●	●	●		●	●	●										●	●		●		●
PBD-230-ALE	●	●	●		●	●		●	●	●	●						●	●		●		●
PBD-400-ALE	●	●	●		●	●						●					●	●		●		●
PBD-440-ALE	●	●	●		●	●							●	●	●		●	●		●		●
PBD-480-ALE	●	●	●		●	●							●	●	●		●	●		●		●
PBD-575-ALE	●	●	●		●	●										●	●	●		●		●
PBE-120-ASE	●	●	●		●	●	●										●	●		●		●
PBE-230-ASE	●	●	●		●	●		●	●	●	●						●	●		●		●
PBE-400-ASE	●	●	●		●	●						●					●	●		●		●
PBE-440-ASE	●	●	●		●	●							●	●	●		●	●		●		●
PBE-480-ASE	●	●	●		●	●							●	●	●		●	●		●		●
PBE-575-ASE	●	●	●		●	●										●	●	●		●		●
PBE-120/208-ASE	●	●	●		●	●		●									●	●		●		●
PBE-220/380-ASE	●	●	●		●	●						●					●	●		●		●
PBE-277/480-ASE	●	●	●		●	●									●		●	●		●		●
SLB-200-ALEA*				●		●	●	●	●	●	●						●	●		●	●	
SLB-200-ALER*	●			●	●	●	●	●	●	●	●						●		●	●	●	
SLB-400-ALEA*	●			●	●	●						●	●	●	●		●	●		●	●	
SLB-400-ALER*	●			●	●	●						●	●	●	●		●		●	●	●	
SLC-120-ALE	●			●			●										●	●		●		
SLC-230-ALE	●			●				●	●	●	●						●	●		●		
SLC-380-ALE	●			●								●					●	●		●		
SLC-440-ALE	●			●									●	●	●		●	●		●		

*The SLB Series is 60 Hz standard.

FEATURE MATRIX

MODEL NUMBER	PHASE LOSS	UNDER VOLTAGE	OVER VOLTAGE	PHASE UNBALANCE	FREQUENCY SHIFT	PHASE SEQUENCE	ADJUSTABLE DELAY	NOMINAL LINE VOLTAGE PHASE-TO-PHASE 50/60 HZ										STYLE A (Plug-In)	STYLE E (Surface Mount)	DIN RAIL MOUNT	DIN RAIL/SURFACE MT.	RESET		LED INDICATOR	UL RECOGNIZED	UL LISTED	CSA CERTIFIED	CURRENT: OVER/UNDER/UNBAL.
								120	208	220	230	240	380	440	460	480	575					AUTOMATIC	MANUAL					
SLD-120-ALE	●	●		●		●	●	●											●			●		●		●		
SLD-120-ASA	●	●		●		●	●	●										●				●		●	●			
SLD-230-ALE	●	●		●		●	●		●	●	●	●							●			●		●		●		
SLD-230-ASA	●	●		●		●	●		●	●	●	●						●				●		●	●			
SLD-380-ALE	●	●		●		●	●						●						●			●		●		●		
SLD-380-ASA	●	●		●		●	●						●					●				●		●	●			
SLD-440-ALE	●	●		●		●	●							●	●	●			●			●		●		●		
SLD-440-ASA	●	●		●		●	●							●	●	●		●				●		●	●			
SLE-120-ALE	●	●		●				●											●			●		●		●		
SLE-230-ALE	●	●		●					●	●	●	●							●			●		●		●		
SLE-380-ALE	●	●		●									●						●			●		●		●		
SLE-440-ALE	●	●		●										●	●	●			●			●		●		●		
SLH-120-ALE	●	●				●		●											●			●		●		●		
SLH-230-ALE	●	●				●			●	●	●	●							●			●		●		●		
SLH-440-ALE	●	●				●								●	●	●			●			●		●		●		
SLJ-120-ALE	●	●				●	●	●											●			●		●				
SLJ-230-ALE	●	●				●	●		●	●	●	●							●			●		●				
SLJ-380-ALE	●	●				●	●						●						●			●		●				
SLJ-440-ALE	●	●				●	●							●	●	●			●			●		●				
SLM-120-ASE	●	●	●	●	●	●	●	●											●			●		●		●	●	
SLM-230-ASE	●	●	●	●	●	●	●		●	●	●	●							●			●		●		●	●	
SLM-380-ASE	●	●	●	●	●	●	●						●						●			●		●		●	●	
SLM-440-ASE	●	●	●	●	●	●	●							●	●	●			●			●	●	●		●	●	
SLM-575-ASE	●	●	●	●	●	●	●										●		●			●	●	●		●	●	
SLU-0200	●	●	●	●		●	●		●	●	●	●	●	●	●	●		●				●		●		●		
SLU-0201	●	●	●	●		●	●		●	●	●	●	●	●	●	●		●				●		●		●		
SLU-100-ASA	●	●	●	●	●	●	●		●	●	●	●	●	●	●	●		●				●	●	●		●		
SLU-100-ASD	●	●	●	●	●	●	●		●	●	●	●	●	●	●	●				●		●	●	●		●		
SLU-600-ASTDS	●	●	●	●	●	●	●		●	●	●	●	●	●	●	●	●				●	●	●	●		●		
DPR350B	●	●	●	●	●	●	●						●	●	●	●				●		●	●	●	●			
DPR175A	●	●	●			●	●				●									●		●		●		●		

FEATURE MATRIX

MODEL NUMBER	UNDER VOLTAGE	OVER VOLTAGE	ADJUSTMENT—KNOB	ADJUSTMENT—LOCKNUT	ADJUSTMENT—FIXED	NOMINAL LINE VOLTAGE												ENCLOSURE			LED INDICATOR	UL RECOGNIZED	CSA CERTIFIED
						12 VDC	24 VAC	24 VDC	28 VDC	48 VDC	110 VDC	120 VAC	208 VAC	220 VAC	230 VAC	240 VAC	440 VAC	STYLE A	STYLE E	STYLE N			
UOA-12-D*A	●		●	●	●	●												●				●	●
UOA-24-A*A	●		●	●	●		●											●				●	●
UOA-24-D*A	●		●	●	●			●										●				●	●
UOA-48-D*A	●		●	●	●					●								●				●	●
UOA-110-D*A	●		●	●	●						●							●				●	●
UOA-120-A*A	●		●	●	●							●						●				●	●
UOA-120-AFN	●				●							●								●		●	
UOA-208-A*A	●		●	●	●								●					●				●	●
UOA-208-AFN	●				●								●							●			
UOA-220-AFN	●				●									●						●		●	
UOA-230-AFN	●				●										●					●		●	
UOA-240-A*A	●		●	●	●										●	●		●				●	●
UOA-240-AFN	●				●											●				●		●	
VBA-12-D*A	●	●	●	●	●	●												●				●	●
VBA-24-A*A	●	●	●	●	●		●											●				●	●
VBA-24-AFN	●	●			●		●													●			
VBA-24-D*A	●	●	●	●	●			●										●				●	●
VBA-28-D*A	●	●	●	●	●				●									●				●	●
VBA-48-D*A	●	●	●	●	●					●								●				●	●
VBA-110-D*A	●	●	●	●	●						●							●				●	●
VBA-120-A*A	●	●	●	●	●							●						●				●	●
VBA-120-AFN	●	●			●							●								●			
VBA-208-A*A	●	●	●	●	●								●					●				●	●
VBA-208-AFN	●	●			●								●							●			
VBA-220-AFN	●	●			●									●						●			
VBA-230-AFN	●	●			●										●					●			
VBA-240-A*A	●	●	●	●	●										●	●		●				●	●
VBA-240-AFN	●	●			●											●				●			

Adjustments: F = Fixed, K = Knob, L = Locknut

C UL US
LISTED
E188860

Multifunction Meter

FEATURES

- 3Ø True RMS (Voltage, Current)
- 3Ø Power (Active, Reactive, Apparent), Energy (Active, Reactive, Apparent)
- Programmable CT/PT Primary/Secondary
- CT Polarity Error Detection
- Variable Pulse width Selection
- Single Phase Network with Phase Selection
- Modbus RTU Communication (RS485)
- Neutral Current Measurement
- THD up to 31st Level.
- Single Pulse Output / Demand Phase Sequence Detection

DISPLAY SPECIFICATION

Display	4 rows, LCD with backlight
Digits	4 (Lowest 8 digits for energy display)
Bargraph	For Current representation

INPUT SPECIFICATIONS

Electrical Connection	3Ø-3 wire, 3Ø-4 wire, 2Ø-3 wire, 1Ø-2 wire
Input Voltage Range	11 to 300V AC, (Phase to Neutral) 19 to 519V AC (Phase to Phase)
Input Current Range	Nominal 5A AC (Min-11mA, Max-6A)
Frequency	45 to 65Hz
Display Scrolling	Automatic / Manual (Programmable)
Power Consumption	8VA Max
Display Reset	Programmable (For energy)
Resolution	For energy : 0.01k, 0.1k, 1k, 0.01m, 0.1m, 1m (depending upon CT ratio x PT ratio) For Power, Voltage, Current : Auto resolution For Power factor : 0.001
Accuracy	Voltage (L-N / L-L) : ±0.5% of F.S. Power Factor ±0.01 Current ±0.5% F.S. Frequency : ±0.1% For L-N Voltage >20V For L-L Voltage >35V Power (Active, Reactive, Apparent) : 1% Energy (Active, Reactive, Apparent) : Class 1
Memory Retention	10 years (For energy)
Measuring Parameters	Voltage (L-L / L-N) (Individual / Average), Current (I1, I2, I3) (Individual / Average), Frequency, Power Factor (Individual /Total), Active, Reactive & Apparent power (Individual / Total), Active, Reactive & Apparent Energy (Total), Demand (Min / Max Active Power, Min/Max Reactive Power, Max Apparent Power), %THD up to 31st Level Max Demand Current, Neutral Current, Phase Sequence Detection

OUTPUT SPECIFICATIONS

Pulse Output	Voltage Range : External 24V DC max Current Capacity : 100mA max Pulse Width : 100 ms ± 5 ms
Communication Interface and Protocol	RS485 and MODBUS RTU
Communication Address	1 to 255
Transmission Mode	Half duplex
Transmission Distance	500 meter maximum
Transmission Speed	300, 600, 1200, 2400, 4800, 9600, 19200 (in bps)
Parity	None, Odd, Even
Stop Bits	1 or 2
Response Time	100 ms (max and independent of baud rate)

AUXILIARY SUPPLY SPECIFICATIONS

Supply Voltage 100 to 240V AC, -15% +12%, 50/60 Hz, (±5%)

SETTABLE PARAMETERS

CT Primary	1/5A to 10kA (Programmable for any value)
CT Secondary	1/5A (Programmable)
PT Primary	100V to 500kV (Programmable for any value)
PT Secondary	100V to 500V (Programmable for any value)

DIMENSIONS

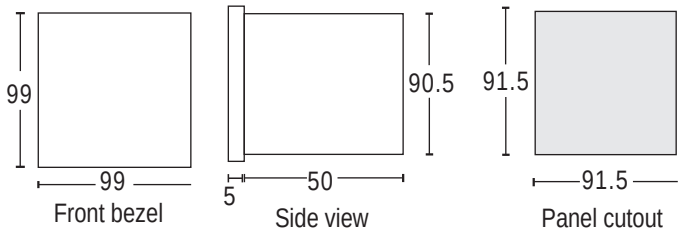

ENVIRONMENTAL SPECIFICATIONS

Temperature	Operating Temperature : -10 to 55°C Storage Temperature : -20 to 75°C
Humidity (non-condensing)	Up to 85% RH

MECHANICAL SPECIFICATIONS

Mounting	Panel mount
Weight	318 gms

TERMINAL CONNECTIONS

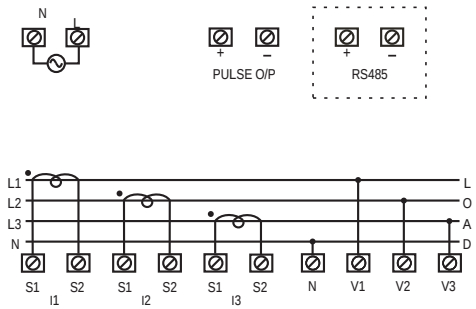

IEC Cable Size (mm²): 0.5 to 2.5 ; Tightening Torque (N-m): 0.68 to 0.79

COMPLIANCE

Applicable EMI / EMC Standards

Product Standard : IEC 61326-1

Category		Standards Compliance
ESD Immunity	IEC 61000-4-2	Level IV (Air discharge : 15kV), (Contact Discharge : -8kV
Surge Immunity	IEC 61000-4-5	+/- 2kV common mode, (Line to ground) +/- 1kV differential mode, (Line to Line)
Radiated Susceptibility	IEC 61000-4-3	Level III, 80 to 1000MHz (10V/m) Level II, 1.4GHz to 2GHz (3V/m) Level I, 2GHz to 2.7GHz (1V/m)
Conducted Susceptibility	IEC 61000-4-6	Level II (3V/m)
Voltage Dips and Interruptions	IEC 61000-4-11	Dips : 0% residual voltage / 1 cycle (Criteria B), 40% residual voltage / 10 cycles 50Hz / 12 cycles 60Hz (Criteria C) 70% residual voltage / 25 cycles 50Hz / 30 cycles 60Hz (Criteria C) Interruptions : 0% residual voltage / 250 cycles 50Hz / 300 cycles 60Hz (Criteria C)
Conducted Emission	CISPR-11	
Radiated Emission	CISPR-11	
Electrical Fast Transient	IEC 61000-4-4	Level III (2kV)

ORDERING INFORMATION

Part Number: VCFP96M

LISTED
E55826

- 3-Phase - 3 Wire Input
- Monitors, Phase Sequence, Under Voltage, Over Voltage
- Trip delay (T) -0.2 to 10 Sec
- LED Indication: Relay ON, Power ON
- Slim, Space Saving Design
- DIN Rail Mount

Phase Monitor

Dimensions

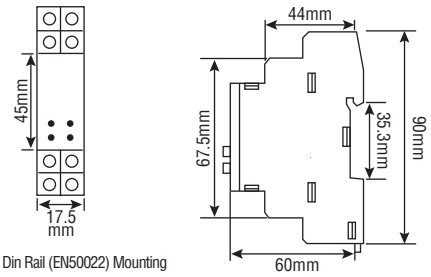

Symmetrical 35mm Din Rail (EN50022) Mounting

Terminal Connections

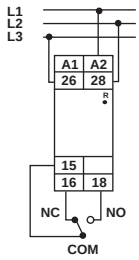

Cable Size (AWG): 16 ; Tightening Torque (Lb-inch): 4.5

Cable Size (mm²): 1.5 ; Tightening Torque (N-m): 0.5

Timing Diagram

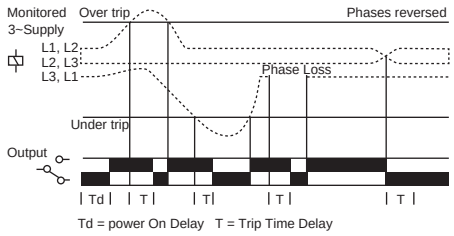

SPECIFICATIONS

ACCURACY (TRIP VOLTAGE)	±0.5% of F.S. (F.S. = Full Scale)
RESET	Auto reset on removal of fault condition
OUTPUT CONTACT	SPDT (1 C/O)
CONTACT RATING	N/O:5A@250V AC N/C:3A@250V AC
PHASE SEQUENCE,	Yes
UNDER VOLTAGE	170 to 224V AC
OVER VOLTAGE	236 to 290V AC
TRIP DELAY (T)	0.2 to 10 Sec
POWER ON DELAY	400 msec
ACCURACY (TRIP TIME)	±5% of F.S. (F.S. = Full Scale)
NOMINAL INPUT VOLTAGE	230V AC
POWER CONSUMPTION	8VA max
OPERATING VOLTAGE	170 to 290V AC
TEMPERATURE	Operating: 0 to 50°C (32 to 122°F) Storage: -20 to 75°C (-4 to 167°F)
HUMIDITY	Up to 95% RH
WEIGHT	62 g
PROTECTION LEVEL	IP50 for faceplate IP40 for housing IP20 for terminals

ORDERING INFORMATION

PART NUMBER	SUPPLY VOLTAGE
DPR175A	3Ø/3W, 170 TO 290V AC, P-P

LED INDICATION CHART

SUPPLY	RELAY LED	POWER LED
Nominal condition	ON	ON
Phase reversed	OFF	ON
UV / OV	OFF	ON

- Under voltage, over voltage, under frequency, over frequency, asymmetry, phase failure and phase sequence monitoring in 3Ø system
- RMS measurement
- Power ON delay, Trip time delay and Delay on release
- LED Indication: Relay ON, Power ON
- Adjustable switching hysteresis
- Two separate alarm relays
- Din-Rail Mount

C UL US
LISTED
E55826 IND.
CONT. EQ 496Y

Voltage Phase Monitor

SPECIFICATIONS

ENVIRONMENTAL SPECIFICATION	
DISPLAY	Liquid Crystal Display 3 Digits

INPUT SPECIFICATIONS	
FUNCTIONS	
MEASUREMENTS	Voltage (V_{L-N}, F_{L-L}), Frequency, Phase Asymmetry, Phase Failure, Phase Sequence
TIME SETTING	Power ON delay, Trip time delay and Delay on release
ALARM INDICATIONS	Trip
LATCHING	Selectable
RESET	Auto/Manual reset
ELECTRICAL CONNECTION	3Ø-3 wire, 3Ø-4 wire
SUPPLY VOLTAGE	Self powered
OPERATING RANGE	280 to 600V AC (L-L) 160 to 300V AC (L-N)
VA RATING	30VA max.
FREQUENCY	45 - 65Hz
MEASURING RANGE (RMS Value)	280 to 600V AC (L-L)*[for 3Ø-3 wire] 160 to 300V AC (L-N)*[for 3Ø-4 wire]

TRIP SETTINGS	
UNDER VOLTAGE	280 to 600V AC (L-L) [for 3Ø-3 wire] 160 to 300V AC (L-N) [for 3Ø-4 wire]
OVER VOLTAGE	280 to 600V AC (L-L) [for 3Ø-3 wire] 160 to 300V AC (L-N) [for 3Ø-4 wire]
UNDER FREQUENCY	45 - 65Hz
OVER FREQUENCY	45 - 65Hz
PHASE FAILURE	Yes
PHASE SEQUENCE	Yes
PHASE ASYMMETRY	5.0 - 99.9%

* For 3Ø-3W, at least 2 phase must be present
* For 3Ø-4W, at least 1 phase must be present

TRIP TIME SETTINGS	
POWER ON DELAY	2 - 99.9 Sec
TRIP TIME DELAY	0 - 99.9 Sec
DELAY ON RELEASE	0 - 99.9 Sec
RESPONSE TIME	<200ms

HYSTERESIS	
VOLTAGE	1.0- 99.9V
FREQUENCEY	0.2 - 2Hz
ASYMMETRY	2 - 20%

RESOLUTION	
VOLTAGE	1V
FREQUENCY	0.1Hz

ACCURACY	
VOLTAGE	±1%
FREQUENCY	±0.3Hz
TIME (Recovery Time, Trip Delay, Power ON Delay)	±5% of setting + 200ms

OUTPUT SPECIFICATIONS	
NO. OF RELAYS	2
TYPE OF OUTPUT **(Relay 1)** **(Relay 2)**	45 - 65Hz SPDT SPDT
RELAY RATING	N/O: 5A @ 250V AC N/C: 3A @ 250V AC

LED INDICATION	
LED 1 (Green)	Power ON
LED 2 (Red)	Relay 1 (Continuously ON after trip)
LED 3 (Red)	Relay 2 (Continuously ON after trip)

ENVIRONMENTAL SPECIFICATION	
AMBIENT TEMP.	Operating Temp: 0°C to 50°C Storage Temp: -20°C to +70°C
HUMIDITY (Non-condensingn)	95% RH
POLLUTION DEGREE	IP50 Faceplate IP30 Housing IP20 Terminals

MECHANICAL SPECIFICATIONS	
NO. OF PUSH BUTTON	3
SIZE	35mm width
MOUNTING	Din Rail Mount
WEIGHT	135 g
CONDUCTOR CROSS SECTION (SOLID)	1 x (0.5 to 4) Sq. mm
CONDUCTOR CROSS SECTION (SLEEVED)	2 x (0.5 to 1.5) Sq. m
(STANDARD)	1 x (0.5 TO 2.5) Sq. mm
SCREW TIGHTENING TORQUE	0.5 N-M

EMC	
ELECTRICAL COMPATIBILITY	IEC 61326-1
ESD IMMUNITY IEC 61000-4-2	Level 3
SURGE IMMUNITY IEC 61000-4-5	±2 kV common mode ±1 kV differential mode
RADIATED SUSCEPTIVILITY IEC 61000-4-3	Level 3, 80 - 1000 MHz
CONDUCTED SUSCEPTIBILITY IEC 61000-4-6	LEVEL 2
VOLTAGE DIPS & INTERRUPTION IEC 6100-4-11	Dips: 0% residual voltage/ 1 cycle (Crit B.) 40% residual voltage / 10 cycles 50 Hz/ 12 cycles 60 Hz (Crit C) 70% residual voltage / 25 cycles 50 Hz . 30 cycles 60 Hz (Crit C) Interruptions: 0% residual voltage / 250 cycles 50 Hz / 300 cycles 60 Hz (Crit C)
CONDUCTED EMMISSIONS	CISPR-11 & IEC 61000-6-3
RADIATED EMISSIONS	CISPR-22
ELECTRICAL FAST TRANSIENT: IEC 6100-4-4	Level 3

DIMENSIONS

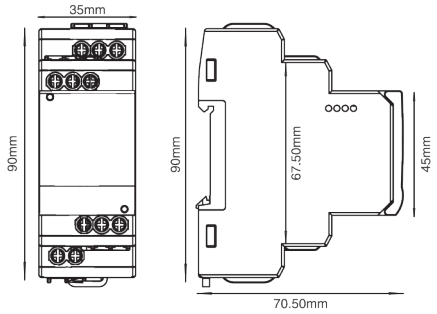

TERMINAL CONNECTIONS

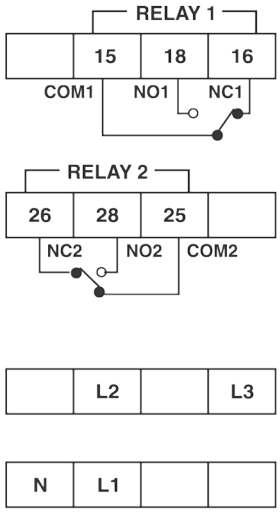

ORDERING INFORMATION

PART NUMBER	OPERATING RANGE
DPR350C	300-600V AC

SLU-0200 Phase Monitor Relays (3-Phase Monitors) provide cost-effective protection against premature equipment failure caused by voltage faults on 3-Phase systems (Wye or Delta). The SLU-0200 Series multi-mode phase monitoring relay, was designed for the convenience of electrician's, maintenance managers and engineers. This device can be easily adjusted for the voltage, imbalance percentage and time delay requirements to protect against unbalanced voltages or single phasing regardless of any regenerative voltages.

Both **DELTA** and **WYE** systems may be monitored. In Wye systems, connections to neutral are NOT required. The SLU-0200 Series is UL Listed under UL File Number E55826.

NOTE: Can be used for most generator applications. Not recommended for variable frequency drive applications. Call technical support for application assistance.

C UL US
LISTED
IND. CONT. EQ
496Y

Universal Phase Monitor w/ Rapid Cycle Lockout

AUTO RANGING SCALES	Frequency	Nominal Line-to-Line Voltages	Adjustable Range
	60Hz	208, 220, 240, 380, 415, 440, 460, 480	200-250 360-500
	50Hz	208, 220, 240 346, 380, 415	200-250 330-430
VOLTAGE BAND	Drop-out	±10% of Range Setting (Under/Over)	
	Pick-up	±7% of Range Setting (Under/Over)	
MAXIMUM VOLTAGE	550 VAC (Line-to-Line)		
PHASE SEQUENCE	ABC (Will Not Operate On CBA Sequence)		
POWER REQUIRED	90VA Max.		
PHASE UNBALANCE	2% to 10%, Adjustable Drop-out		
	Hysteresis	10% of Setting	
PHASE SHIFT	13° Drop-out, 12° Pick-up (Ø-Loss)		
FREQUENCY SHIFT	Not Detected		
RAPID CYCLE	5 Cycle Lockout, 30 minute cycle count reset		
RESET	Automatic		
RELAY OUTPUT	SPDT, 10A @ 240VAC Resistive, 1/2 HP @240VAC		
INDICATORS		Flashing	Continuous
	Normal (Green LED)	Fault Delay Active	Relay Energized
	Fault (Red LED)	Restart Delay Active	Relay De-energized
RESPONSE	Power Up	2.5 SEC Minimum	
	Fault Delay	1 to 25 SEC., Adjustable	
	Severe Fault	1 SEC. (Phase-Loss, Unbalance or Phase Reversal)	
	Restart	0.5 to 300 S, Adjustable (Auto Reset)	
TEMPERATURE RATINGS	Operate	32° to 131°F (0° to +55°C)	
	Storage	-49° to 185°F (-45° to +85°C)	
REPEAT ACCURACY	1% @ Fixed Condition		
ENCLOSURE	Style "A"	8-Pin Plug In LEXAN® Dust Cover	
WEIGHT	0.35 to 0.5 lbs.		

TOP LABEL

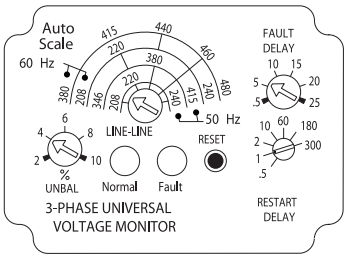

DIMENSIONS (INCHES)

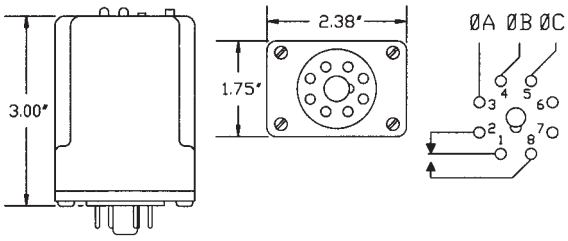

ORDERING INFORMATION

MODEL NUMBER	DESCRIPTION
SLU0200	Voltage/Phase Monitor

c UL us LISTED

IND. CONT. EQ
496Y

Universal Phase Monitor w/ Rapid Cycle Lockout & Diagnostic LED

SLU-0201 Phase Monitor Relays (3-Phase Monitors) provide cost-effective protection against premature equipment failure caused by voltage faults on 3-Phase systems (Wye or Delta). The SLU-0201 Series multi-mode phase monitoring relay, was designed for the convenience of electrician's, maintenance managers and engineers. This device can be easily adjusted for the voltage, imbalance percentage and time delay requirements to protect against unbalanced voltages or single phasing regardless of any regenerative voltages.

Both **DELTA** and **WYE** systems may be monitored. In Wye systems, connections to neutral are NOT required. The SLU-0201 Series is UL Listed under UL File Number E55826.

NOTE: Can be used for most generator applications. Not recommended for variable frequency drive applications. Call technical support for application assistance.

TOP LABEL

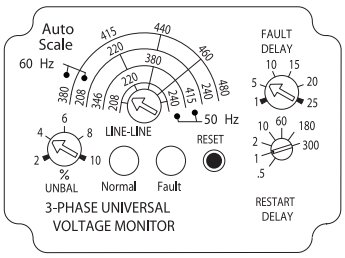

DIMENSIONS (INCHES)

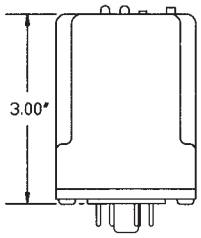

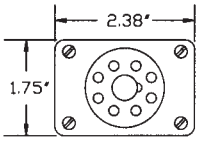

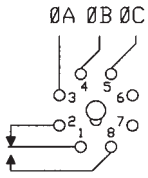

LED STATUS		CONDITION
GRN		NORMAL - RELAY ON
		FAULT DELAY: OV/UV
RED		UNBALANCE
		UNDER/OVER VOLT
YEL		REVERSAL
		RESTART DELAY
		ØB LOSS
GRN		ØA LOSS or
RED		ØC LOSS or
YEL		3-Ø POWER OFF
RED		(5) FAULT LOCKOUT:
YEL		MANUAL RESET REQ.

ORDERING INFORMATION

MODEL NUMBER	DESCRIPTION
SLU0201	Voltage/Phase Monitor

SPECIFICATIONS

AUTO RANGING SCALES	Frequency	Nominal Line-to-Line Voltages	Adjustable Range
	60Hz	208, 220, 240, 380, 415, 440, 460, 480	200-250 360-500
	50Hz	208, 220, 240 346, 380, 415	200-250 330-430
VOLTAGE BAND	Drop-out	±10% of Range Setting (Under/Over)	
	Pick-up	±7% of Range Setting (Under/Over)	
MAXIMUM VOLTAGE	550 VAC (Line-to-Line)		
PHASE SEQUENCE	ABC (Will Not Operate On CBA Sequence)		
POWER REQUIRED	90VA Max.		
PHASE UNBALANCE	2% to 10%, Adjustable Drop-out		
	Hysteresis	10% of Setting	
PHASE SHIFT	13° Drop-out, 12° Pick-up (Ø-Loss)		
FREQUENCY SHIFT	Not Detected		
RAPID CYCLE	5 Cycle Lockout, 30 minute cycle count reset		
RESET	Automatic		
RELAY OUTPUT	SPDT, 10A @ 240VAC Resistive, 1/2 HP @240VAC		
INDICATOR LEDS	For Complete Fault Codes, See Table		
	Green	Flashing or On Solid = Relay Energized	
	Bi-Color Red/Yel	Flashing or On Solid = Relay De-Energized	
RESPONSE	Power Up	2.5 SEC Minimum	
	Fault Delay	1 to 25 SEC., Adjustable	
	Severe Fault	1 SEC. (Phase-Loss, Unbalance or Phase Reversal)	
	Restart	0.5 to 300 S, Adjustable (Auto Reset)	
TEMPERATURE RATINGS	Operate	32° to 131°F (0° to +55°C)	
	Storage	-49° to 185°F (-45° to +85°C)	
REPEAT ACCURACY	1% @ Fixed Condition		
ENCLOSURE	Style "A"	8-Pin Plug In LEXAN® Dust Cover	
WEIGHT	0.35 to 0.5 lbs.		

Phase Monitor Relays (3-Phase Monitors) provide cost-effective protection against premature equipment failure caused by voltage faults on 3-Phase systems (Wye or Delta). The SLU Series multi-mode phase monitoring relay, was designed for the convenience of electrician's, maintenance managers and engineers. A single SLU Phase Monitoring Relay can be easily adjusted for the voltage, imbalance percentage and time delay requirements to protect against unbalanced voltages or single phasing regardless of any regenerative voltages.

Both **DELTA** and **WYE** systems may be monitored. In Wye systems, connections to neutral are NOT required. The SLU-100 Series is UL Listed under UL File Number E55826.

NOTE: Not recommended for generator or variable frequency drive applications. Call technical support for application assistance.

C UL US LISTED

IND. CONT. EQ 496Y

SLU-100-ASA SLU-100-ASD

Universal Phase Monitor

SPECIFICATIONS

AUTO RANGING SCALES	Frequency	Nominal Line-to-Line Voltages	Adjustable Range
	60Hz	208, 220, 240, 380, 415, 440, 460, 480	200-250 360-500
	50Hz	208, 220, 240 346, 380, 415	200-250 330-430
VOLTAGE BAND	Drop-out	±10% of Range Setting (Under/Over)	
	Pick-up	±7% of Range Setting (Under/Over)	
MAXIMUM VOLTAGE	550 VAC (Line-to-Line)		
PHASE SEQUENCE	ABC (Will Not Operate On CBA Sequence)		
POWER REQUIRED	90VA Max.		
PHASE UNBALANCE	2% to 10%, Adjustable Drop-out		
	Hysteresis	10% of Setting	
PHASE SHIFT	13° Drop-out, 12° Pick-up (Ø-Loss)		
FREQUENCY SHIFT	50/60 Hz		
	Drop-out	± 4%	
	Pick up	± 3%	
RESET	Automatic or Manual Mode		
RELAY OUTPUT	SPDT, 10A @ 240VAC Resistive, 1/2 HP @240VAC		
INDICATORS		Flashing	Continuous
	Normal (Green LED)	Fault Delay Active	Relay Energized
	Fault (Red LED)	Restart Delay Active	Relay De-energized
RESPONSE	Power Up	2.5 SEC Minimum	
	Fault Delay	.1 to 25 SEC., Adjustable	
	Severe Fault	100mS (Phase-Loss, Unbalance or Phase Reversal)	
	Restart	0.5 to 300 S, Adjustable (Auto Reset)	
TEMPERATURE RATINGS	Operate	32° to 131°F (0° to +55°C)	
	Storage	-49° to 185°F (-45° to +85°C)	
REPEAT ACCURACY	1% @ Fixed Condition		
TERMINALS (DIN)	Slotted Screw Terminal Clamps, 12AWG Max.		
ENCLOSURE	Style "A"	LEXAN® Dust Cover	
	DIN	35mm DIN Rail, 14 Term Polycarbonate Housing	
WEIGHT	0.35 to 0.5 lbs.		

ORDERING INFORMATION

MODEL NUMBER	DESCRIPTION
SLU-100-ASA	Universal Phase Monitor
SLU-100-ASD	Din Rail Mount Universal Phase Monitor

TOP LABELS

Plug-In

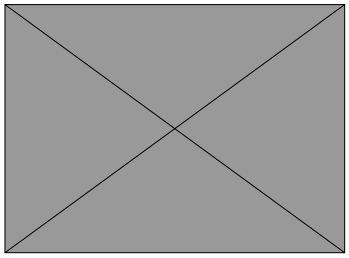

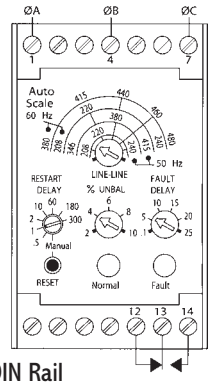

DIN Rail

DIMENSIONS (INCHES)

Socket Unit

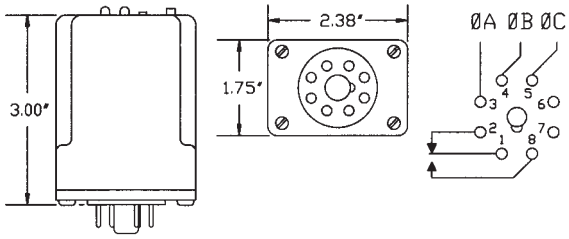

DIN Mount Unit

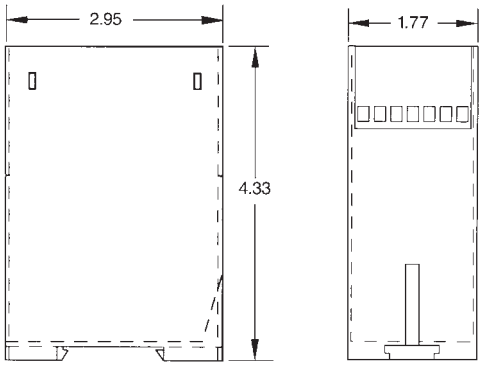

C UL US LISTED

IND. CONT. EQ 496Y

Universal Phase Monitor

The ATC-Diversified Electronics **SLU-600-ASTDS** Universal Phase Monitor protects 3-phase motors up to 700VAC. The **RAPID CYCLING** feature prevents motors cycling due to load-induced line fault conditions. Powered by 120VAC, this reliable motor protection relay is unaffected by transients and disturbances from the monitored power source. The SLU-600 Series is UL Listed under UL File Number E55826.

- Monitors up to 700 VAC
- DIN Rail or Surface Mount
- Operating Range 200-630 VAC
- Manual or Automatic Reset
- Adjustable Restart Delay
- Adjustable Fault Delay

PROTECTS AGAINST:

- Rapid Cycling
- Phase Loss
- Phase Reversal
- Phase Unbalance
- Phase Shift
- Over/Under Voltage
- Over/Under Frequency

ORDERING INFORMATION

MODEL NUMBER	DESCRIPTION
SLU-600-ASTDS	Universal Phase Monitor/Relay

SPECIFICATIONS

AUTO RANGING SCALES	Frequency	Nominal Line-to-Line Voltages	Adjustable Range
	60Hz	208, 220, 240	200-250
		380, 415, 440,	360-500
		460, 480, 575, 600	550-630
	50Hz	208, 220, 240	200-250
		346, 380, 415	330-430
3Ø VOLTAGE BAND	Drop-out	±10% of Range Setting (Under/Over)	
	Pick-up	±7% of Range Setting (Under/Over)	
CONTROL VOLTAGE	120 VAC ±10%, 50/60Hz		
MAXIMUM VOLTAGE	700 VAC (Line-to-Line)		
PHASE SEQUENCE	ABC (Will Not Operate On CBA Sequence)		
POWER REQUIRED	90VA Max.		
PHASE UNBALANCE	2% to 10%, Adjustable Drop-out		
	Hysteresis	10% of Setting	
PHASE SHIFT	13° Drop-out, 12° Pick-up (Ø-Loss)		
FREQUENCY SHIFT	50/60 Hz		
	Drop-out	± 4%	
	Pick up	± 3%	
RAPID CYCLING	5 Cycle Lockout, 30-Min. Cycle Count Reset		
RESET	Automatic or Manual Mode Clears Rapid Cycle Count		
RELAY OUTPUT	DPDT, 10A @ 240 VAC Resistive		
LED'S		Flashing	Continuous
	Normal (Green LED)	Fault Delay Active	Relay Energized
	Fault (Red LED)	Restart Delay Active	Relay De-energized
	Over (Red LED)	Restart Delay Active	Relay De-energized
	Unbal / Ø Loss (Red LED)	Restart Delay Active	Relay De-energized
RESPONSE	Power Up	2.5 S Minimum	
	Fault Delay	0.1 to 25 S, Adjustable	
	Severe Fault	100mS (Ø-Loss, Unbalance or Ø Reversal)	
	Restart	0.5 to 300 S, Adjustable (Auto Reset)	
TEMPERATURE RATINGS	Operate	32° to 131°F (0° to +55°C)	
	Storage	-49° to 185°F (-45° to +85°C)	
REPEAT ACCURACY	1% @ Fixed Condition		
TERMINALS	Plug and Socket Term Block with Spring Pressure Wire Retention, 12 AWG Max.		
ENCLOSURE	35mm DIN Rail or Surface Mount, Polycarbonate Housing		
WEIGHT	1.10 lbs.		

DIMENSIONS (INCHES/MILLIMETERS)

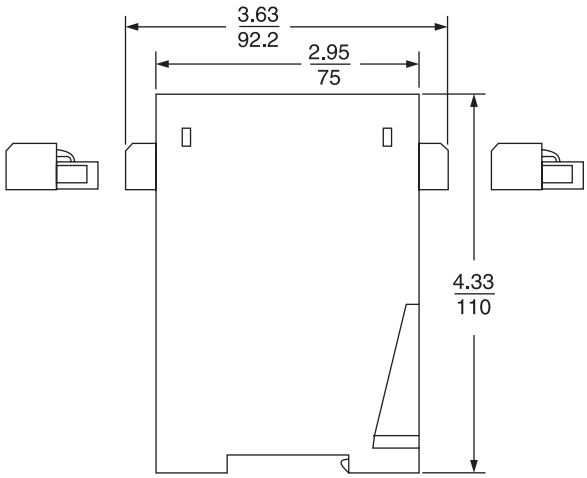

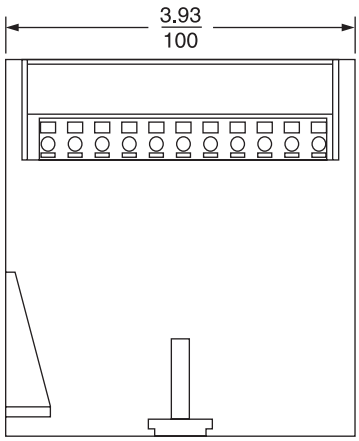

TOP LABEL

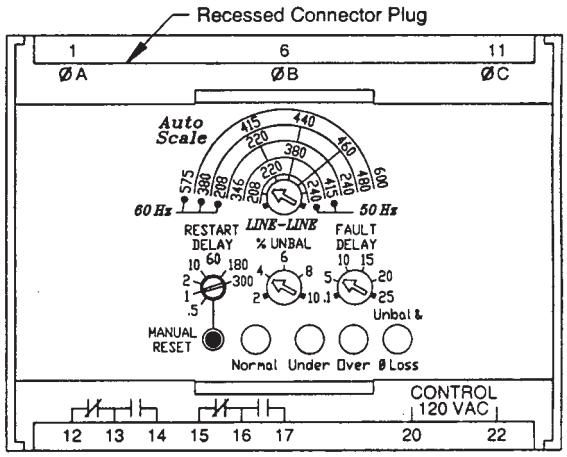

LED STATUS CHART

● = OFF
○ = ON
☼ = FLASHING

	Normal Green LED	Under Red LED	Over Red LED	Unbal & Ø Loss Red LED
Powering Up/First 3 Sec	●	●	●	☼
Powered Up/Normal Voltages	○	●	●	●
Relay ON/Under Voltage Detected/FAULT DELAY active	☼	●	●	●
Relay ON/Over Voltage Detected/ FAULT DELAY active	☼	●	●	●
Relay ON/Unbal or Ø Loss Detected/FAULT DELAY active	☼	●	●	●
Relay OFF/Under Voltage Failure	●	○	●	●
Relay OFF/Over Voltage Failure	●	●	○	●
Relay OFF/Unbal or Ø Loss Failure	●	●	●	○
Relay OFF/Under Voltage Corrected/RESTART DELAY active	●	☼	●	●
Relay OFF/Over Voltage Corrected/RESTART DELAY active	●	●	☼	●
Relay OFF/Unbal or Ø Loss Corrected/RESTART DELAY active	●	●	●	☼

STYLE "A"

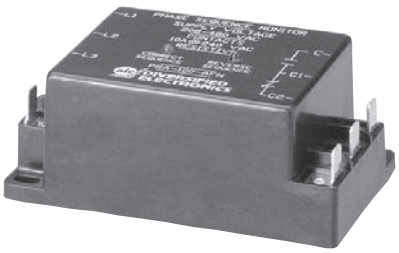

STYLE "N"

The **PRA-100 Series** Phase Sequence Monitors are designed to allow the output to energize only when the phase connections are in the proper sequence. For use in applications where motor direction is critical or the installation is required by code to have sequence detection.

When the phase sequence is correct and the operating voltage is present on all phases, the relay will energize and the green LED indicator will glow. If the phases are in reverse rotation, the relay will not energize and the red LED indicator will glow. The PRA-100 Series will not detect phase loss while the motor is turning. The PRA Series is UL Listed under UL File Number E55826.

Phase Sequence Monitor

SPECIFICATIONS

OPERATING VOLTAGE	208-480 VAC ±15%, phase-to-phase, 50/60	
PHASE SEQUENCE	ABC (Will Not Operate CBA)	
TOTAL APPARENT POWER	11 VA @ 480 VAC	
OUTPUT RATING	Style A & N	SPDT, 10 Amps @ 240 VAC Resistive, 1/2 hp @ 240 VAC
	Style E	DPDT, 10 Amps @ 240 VAC Resistive, 1/2 hp @ 240 VA
RESET	Automatic	
INDICATORS	Green LED	Glows on correct sequence
	Red LED	Glows on incorrect sequence
RESPONSE TIMES	200 mSEC. (approximately)	
TEMPERATURE RATING	Operate	32° to +131°F (0° to +55°C)
	Storage	-49° to 185°F (-45° to +85°C)
ENCLOSURE	Style "A"	LEXAN® dust cover 8-Pin plug-in. RB-08 or OT-08 socket required
	Style "N"	Glass filled VALOX® surface mounted 6-1/4" male quick connect
	Style "E"	LEXAN® Surface Mount, #8-32 screws
WEIGHT	Style "A"	0.3 lbs.
	Style "N"	0.35 lbs.
	Style "E"	0.75 lbs

DIMENSIONS (INCHES/MILLIMETERS)

STYLE "A"

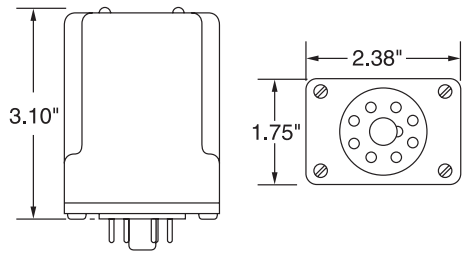

STYLE "N"

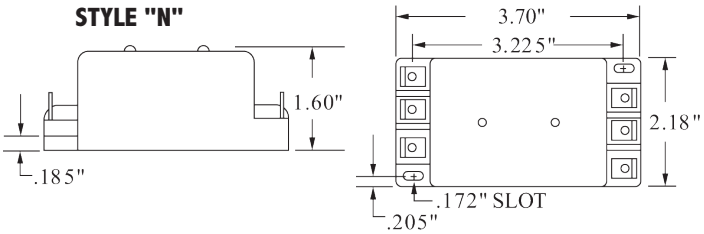

STYLE "E"

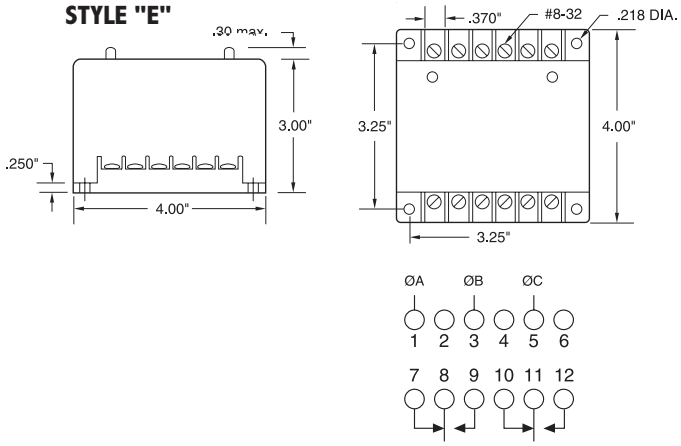

WIRING

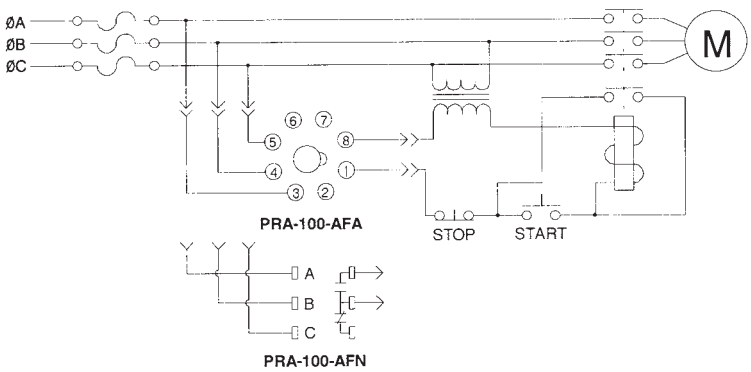

MODEL NUMBER

MODEL NUMBER	PRA	100	
ENCLOSURES			
LEXAN® dust cover 8-Pin plug-in. RB-08 or OT-08 Socket			AFA
Glass filled VALOX® surface mounted 6-1/4" male quick connect			AFN
LEXAN® Surface Mount, #8-32 screws			AFE

The ATC Diversified **SLA Series** is designed to protect 3-phase equipment against PHASE LOSS, UNDER VOLTAGE, and PHASE REVERSAL conditions.

With normal operating voltages applied in the proper ABC sequence, the internal relay will energize (PICK-UP). When incorrect phase sequence or phase loss occurs or the three-phase voltages fall below the drop out voltages, the relay will de-energize (DROP-OUT). On models featuring indicators, the LED glows when all line conditions are normal.

Both Delta and Wye systems may be monitored. In Wye systems, connections to neutral are NOT required.

For UL Listed units, with field wiring terminals, copper wire with 60°/75°C rating must be used for control circuitry connections.

NOTE: When a phase is lost while the motor is running, a condition known as regeneration occurs where a voltage is induced into the open phase nearly equal in magnitude to the normal phase-to-phase voltage. However, with the exception of lightly loaded motors, enough change is detected by the SLA to provide the required protection when properly adjusted. The SLA Series is UL Listed under file Number E55826.

LISTED
IND. CONT. EQ.
496Y

Phase Monitors

- Available up to 480 VAC (625 VAC with "E" style)
- Delta or Wye Systems
- Fixed, Lock Shaft, or Screwdriver Adjustments
- Several Enclosure Styles

PROTECTS 3-PHASE EQUIPMENT AGAINST:

- Phase Loss
- Under Voltage
- Phase Reversal

TYPICAL APPLICATIONS

- Air Handlers
- Computer Power Protection
- Conveyor Drive
- Water Waste & Sewage Machinery
- Oil & Gas Pumps
- Sawmill & Woodpump Machinery
- Power Substation
- Automatic Transfer Switching for Monitoring Emergency Power Supplies
- Irrigation Pumps
- Lift Station Pumps
- Robotics Equipment
- Elevator Drives
- Commercial/Industrial Air Conditioning & Refrigeration Compressors

SPECIFICATIONS

DROP OUT VOLTAGE	1 Ø Low	83% of Nominal
	3 Ø Low	90% of Nominal
RESPONSE TIMES	Models Up to 300 VAC	
STYLE "A" & "E"	Operate	250 mSEC
	Release	0.5 SEC
	Models Over 300 VAC	
	Operate	1.0 SEC
	Release	2.0 SEC
RESPONSE TIMES STYLE "N"	Operate	60 mSEC
	Release	0.5 SEC
POWER REQUIRED	Style "A"	3 VA (approximately)
	Style "E"	Models up to 300 VAC: 3 VA (max.) Models over 300 VAC: 7 VA (max.) Models up to 500 VAC: 3 VA (max.)
	Style "N"	3 VA (max.)
OPERATING VOLTAGE	See Ordering Information	
RESET	Automatic (Manual Optional)	
INDICATOR LED	Glows when all conditions are Normal (On Applicable Models)	
OUTPUT RATING	SPDT (Style "A" and "N") DPDT (Style "E")	
PHASE SEQUENCE	ABC (Will not Operate CBA)	
TEMPERATURE RATING	Operate	32 to +131 F (0 to +55C)
	Storage	-49 to 185 F (-45 to +85 C)
U.S. PATENT NUMBER	3,611,050	
WEIGHT	Style "A"	NET:2.24 oz Shipping: 2.56 oz
	Style "N"	NET:4.8 oz Shipping: 5.76 oz.
	Style "E"	NET:5.3 oz Shipping: 5.6 oz

MODEL NUMBER

MODEL NUMBER	SLA		A			
OPERATING VOLTAGE						
See Ordering Information		XXX				
TYPE OF OPERATION						
Fixed				F		
Lock Shaft Adjusted				L		
Screwdriver Adjusted				S		
ENCLOSURE STYLE						
Octal Plug-In Dust Cover					A	
Blad Plug-In, Dust Cover					B	
Surface Mounted, #8 Screw Terminals					E	
Surface Mounted, 1/4" Quick Disconnect Terminals					N	
OPTIONS						
Add R Suffix when manual reset is required, (Available only in Style "E" Enclosure)						R
Plug-In models are UL Listed only when used with RB-08 socket.						U

STYLE "A"

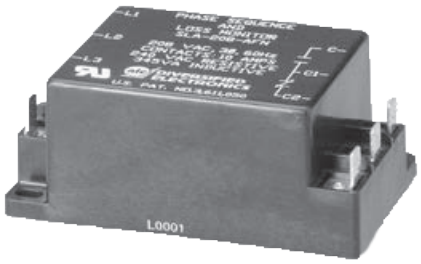

STYLE "N"

STYLE "E"

DIMENSIONS (INCHES)

STYLE "A"

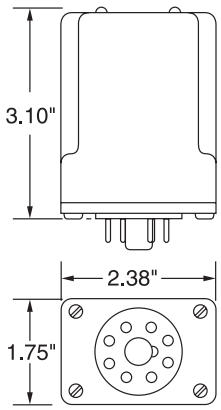

STYLE "B"

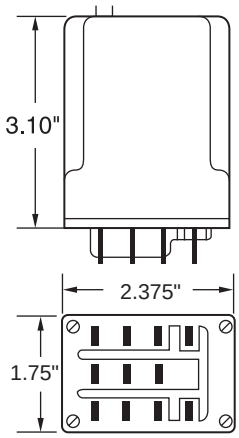

STYLE "E"

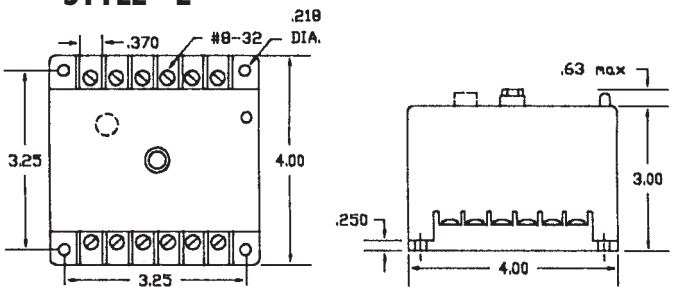

STYLE "N"

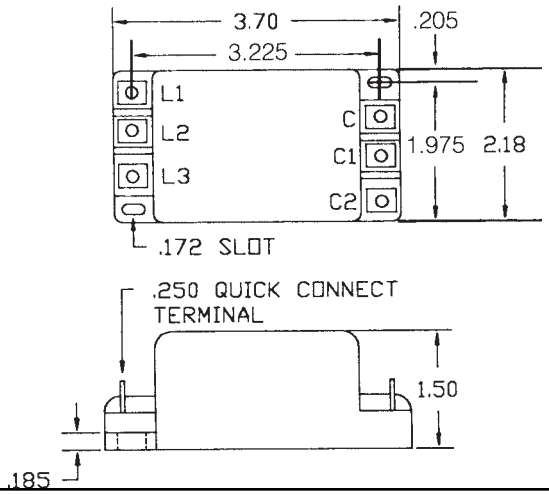

WIRING

STYLE "A"

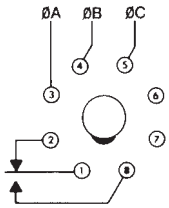

Figure 1
RB-08 or OT-08

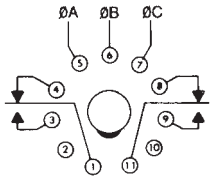

Figure 2
RB-11

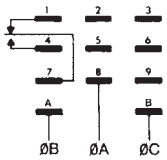

Figure 3
70-463-1

STYLE "E"

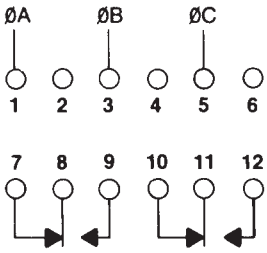

Figure 4

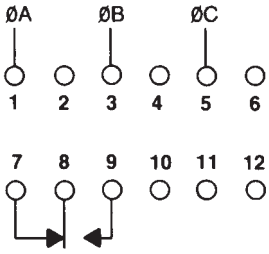

Figure 5

STYLE "N"

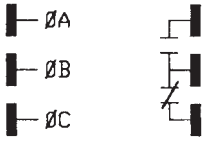

ORDERING INFORMATION

STYLE A PLUG-IN

MODEL NUMBER	OPERATING VOLTAGE	TYPE OF ADJUSTMENT	DROP-OUT VOLTAGE 1 Ø LOW	DROP-OUT VOLTAGE 3 Ø LOW	AGENCY APPROVAL	OUTPUT RATINGS
SLA-120-ALA	95-130 Adj	Lock Shaft	79-108	85-117	—	DPDT, 345 VA Inductive; 10 Amps Resistive @ 240 VAC. Figure 2
SLA-120-ASA		Screwdriver				SPDT, 345 VA Inductive; 10 Amps Resistive @ 240 VAC, Figure 1
SLA-120-ASB					—	SPDT, 345 VA Inductive; 10 Amps Resistive @ 240 VAC, Figure 3
SLA-230-ALA	190-270 Adj.	Lock Shaft	158-224	171-243		DPDT, 345 VA Inductive; 10 Amps Resistive @ 240 VAC, Figure 2
SLA-230-ASA		Screwdriver				SPDT, 345 VA Inductive; 10 Amps Resistive @ 240 VAC, Figure 1
SLA-230-ASB					—	SPDT, 345 VA Inductive; 10 Amps Resistive @ 240 VAC, Figure 3
SLA-380-ASA	350-440 Adj.		290-365	315-396	—	SPDT, 360 VA Inductive; 10 Amps Resistive @ 240 VAC, Figure 1
SLA-440-ASA	430-480 Adj.		357-398	387-432		
SUA-120-ALA	95-130 Adj.	Lock Shaft	79-108	85-117		SPDT, 345 VA Inductive; 10 Amps Resistive @ 240 VAC, Figure 1
SUA-120-ALAU*						
SUA-230-ALA	190-270 Adj.		158-224	171-243		
SUA-230-ALAU*						
SUA-380-ASA	350-440 Adj.	Screwdriver	290-365	315-396		SPDT, 10 Amps Resistive @ 240 VAC, Figure 1
SUA-440-ASA	430-480 Adj.		357-398	387-432		

*UL Listed only when used with RB-08 relay socket; 5 Amps Resistive @ 240 VAC. All voltages referenced on this page are phase-to-phase.
Models also available with fixed operating voltages. Consult factory.

STYLE E SURFACE MOUNTED ENCLOSURE

MODEL NUMBER	OPERATING VOLTAGE	DROP-OUT VOLTAGE 1 Ø LOW	DROP-OUT VOLTAGE 3 Ø LOW	RESET	AGENCY APPROVAL	OUTPUT RATINGS
SLA-120-ALE	95-130 Adj.	79-108	85-117	Automatic		DPDT, 211 VA Inductive; 10 Amps Resistive @ 120 VAC. Figure 4
SLA-120-ALER				Manual		DPDT, 211 VA Inductive; 10 Amps Resistive @ 120 VAC. Figure 4
SLA-230-ALE	190-270 Adj.	158-224	171-243	Automatic		DPDT, 345 VA Inductive; 5 Amps Resistive @ 240 VAC. Figure 4
SLA-230-ALER				Manual		DPDT, 345 VA Inductive; 5 Amps Resistive @ 240 VAC. Figure 4
SLA-380-ALE	350-440 Adj.	290-365	315-396	Automatic		DPDT, 360 VA Inductive; 3 Amps Resistive @ 600 VAC. Figure 4
SLA-380-ALER				Manual		SPDT, 360 VA Inductive; 3 Amps Resistive @ 600 VAC. Figure 5
SLA-440-ALE	430-480 Adj.	357-398	387-432	Automatic		DPDT, 360 VA Inductive; 3 Amps Resistive @ 600 VAC. Figure 4
SLA-440-ALER				Manual		SPDT, 360 VA Inductive; 3 Amps Resistive @ 600 VAC. Figure 5
SLA-575-ALE	525-625 Adj.	436-519	473-563	Automatic		DPDT, 360 VA Inductive; 3 Amps Resistive @ 600 VAC. Figure 4

All voltage referenced are phase-to-phase.—Models also available with fixed operating voltages. Consult factory.

STYLE N EPOXY ENCAPSULATED

MODEL NUMBER	OPERATING VOLTAGE	TYPE OF OPERATION	DROP-OUT VOLTAGE 1 Ø LOW	DROP-OUT VOLTAGE 3 Ø LOW	AGENCY APPROVAL
SLA-120-AFN	120	Fixed	100	108	
SLA-208-AFN	208	Fixed	173	187	
SLA-220-AFN	220	Fixed	183	198	
SLA-240-AFN	240	Fixed	199	216	

SPDT 180VA @ 120VAC; 72VA @ 24VAC; All voltage referenced are phase-to-phase.
SPDT 180 va @ 120 vac, 72 va @ 24 vac.

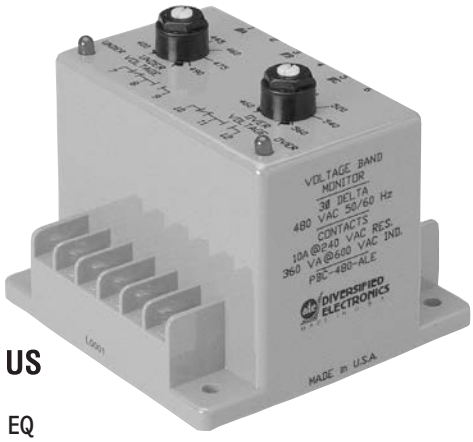

C UL US
LISTED
IND. CONT. EQ
496Y

3-Phase Voltage Band Monitor

The **PBC Series** offers protection to three-phase equipment that is required to operate between two voltage limits. All three phases are monitored individually for a pre-selected **UNDER** and **OVER VOLTAGE** limit.

OPERATION

With normal operating voltages applied, the internal relay will energize (PICK-UP). When the voltages on any or all phases fall outside the pre-set Over/Under trip points for longer than the Release delay, the relay will de-energize (DROP-OUT). When line conditions return to normal, the PBC Series Monitor automatically resets and the internal relay energizes.

The LED fault indicators aid in set up and system trouble-shooting glowing on fault condition. The LED indicators have an immediate response to voltage conditions and operate independently of the relay.

The HYSTERESIS in each unit provides a differential of 4% between the PICK-UP and DROP-OUT trip points.

The PBC Series is UL Listed under UL File Number E55826.

DIMENSIONS (INCHES)

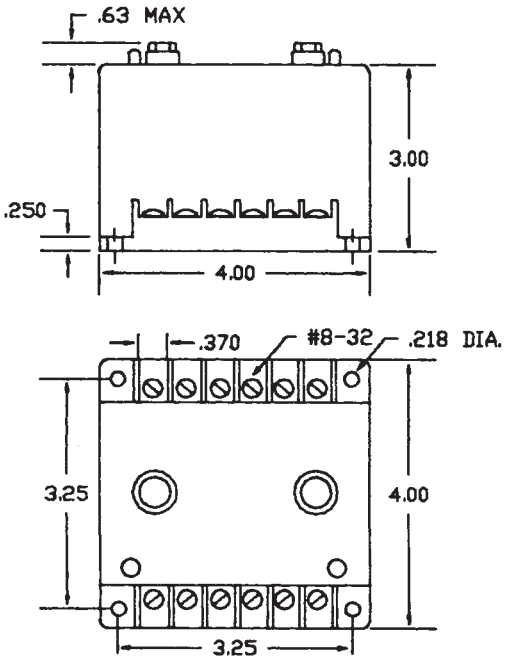

WIRING

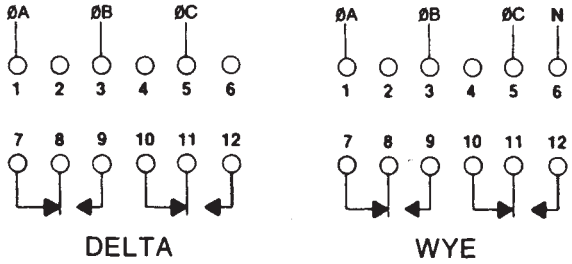

SPECIFICATIONS

OUTPUT RATING	DPDT, 10Amps @ 240 VAC, Resistive; 360 VA @ 600 VAC, Inductive; 1/2 hp	
POWER REQUIRED	Models Up to 300 VAC	7 VA, Max
	Models Over 300 VAC	6 VA, Max
RESET	Automatic	
HYSTERESIS	4%	
REPEAT ACCURACY	0.1% @ Fixed Condition	
INDICATORS LED	Glows On Fault; (1) For Over, (1) For Under	
RESPONSE TIMES	Operate	100 mSEC
	Release	0.5 SEC
TEMPERATURE RATING	Operate	32° to +131°F (0° to +55°C)
	Storage	-49° to 185°F (-45° to +85°C)
WEIGHT	20 oz.	

DELTA CONNECTED

MODEL NUMBER	MAXIMUM VOLTAGE	ADJUSTABLE RANGES UNDER	OVER
PBC-120-ALE	155 VAC	90-120	120-150
PBC-230-ALE	275 VAC	185-240	208-265
PBC-400-ALE	485 VAC	325-385	415-475
PBC-440-ALE	550 VAC	390-480	440-540
PBC-480-ALE	570 VAC	400-490	460-560
PBC-575-ALE	700 VAC	500-610	540-690

All voltages referenced on this page are phase-to-phase, unless otherwise indicated.

WYE CONNECTED

MODEL NUMBER	MAXIMUM VOLTAGE	ADJUSTABLE RANGES (Phases to Neutral) UNDER	OVER
PBC-120/208-ALE	268 VAC	90-120	120-150
PBC-220/380-ALE	450 VAC	185-220	220-255
PBC-277/480-ALE	565 VAC	235-277	277-320

All voltages referenced on this page are phase-to-phase, unless otherwise indicated.

The **PBD Series** offers protection to three-phase sequence sensitive equipment that is required to operate between two voltage limits. All three phases are monitored individually for a pre-selected **UNDER** and **OVER VOLTAGE** limit, with adjustable release delay.

OPERATION

With normal operating voltages applied in the proper ABC sequence, the internal relay will energize (PICK-UP). When the voltages on any or all phases fall outside the preset Over/Under trip points for longer than the Adjustable Release delay, the relay will de-energize (DROPOUT). When line conditions return to normal, the PBD Series Monitor automatically resets and the internal relay energizes.

Both Delta and Wye systems may be monitored. In Wye systems, connections to neutral are not required.

The LED fault indicators aid in set up and system troubleshooting, and glow on fault condition. The LED indicators have an immediate response to voltage conditions and operate independently of the relay. In a phase reversal condition the LED responds to voltage conditions but the relay will NOT energize.

The Adjustable Release Delay is provided to ignore momentary voltage fluctuations that cause nuisance tripping.

The HYSTERESIS in each unit provides a differential of 4% between the PICK-UP and DROP-OUT trip points.

The PBD Series is UL Listed under UL File Number E55826.

SPECIFICATIONS

OUTPUT RATING	DPDT, 10Amps @ 240 VAC, Resistive; 360 VA @ 600 VAC, Inductive; 1/2 hp	
POWER REQUIRED	Models Up to 300 VAC	7 VA, Max
	Models Over 300 VAC	6 VA, Max
RESET	Automatic	
PHASE SEQUENCE	ABC (Will Not Operate CBA)	
HYSTERESIS	4%	
REPEAT ACCURACY	0.1% @ Fixed Condition	
INDICATORS LED	Glows On Fault; (1) For Over, (1) For Under	
RESPONSE TIMES	Operate	100 mSEC
	Release	0.1 to 30 SEC, Adjustable
TEMPERATURE RATING	Operate	32° to +104°F (0° to +40°C)
	Storage	-49° to 185°F (-45° to +85°C)
WEIGHT	19 oz.	

MODEL NUMBER	MAXIMUM VOLTAGE	ADJUSTABLE RANGES UNDER	OVER
PBD-120-ALE	155 VAC	90-120	120-150
PBD-230-ALE	275 VAC	185-240	208-265
PBD-400-ALE	485 VAC	325-385	415-475
PBD-440-ALE	550 VAC	390-480	440-540
PBD-480-ALE	570 VAC	400-490	460-560
PBD-575-ALE	700 VAC	500-610	540-690

All voltages referenced on this page are phase-to-phase.

C UL US LISTED IND. CONT. EQ 496Y

3 Phase Sequence & Voltage Band Monitor/Relays

DIMENSIONS (INCHES)

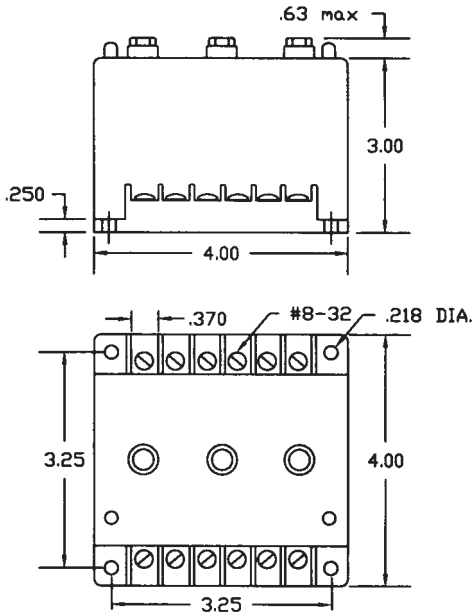

WIRING

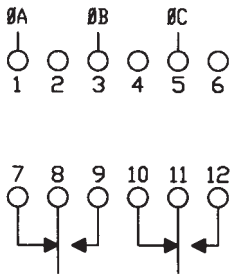

c UL us
LISTED
IND. CONT. EQ
496Y

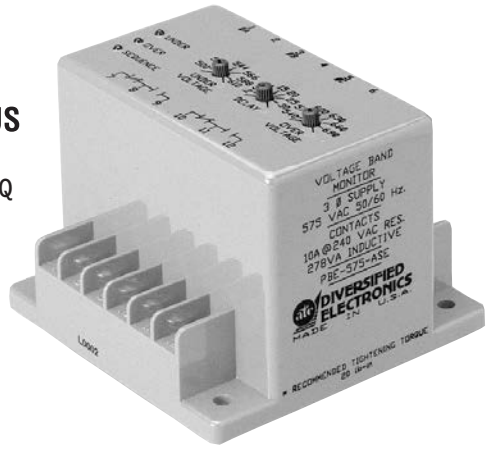

True RMS Voltage Band Monitor

DIMENSIONS (INCHES)

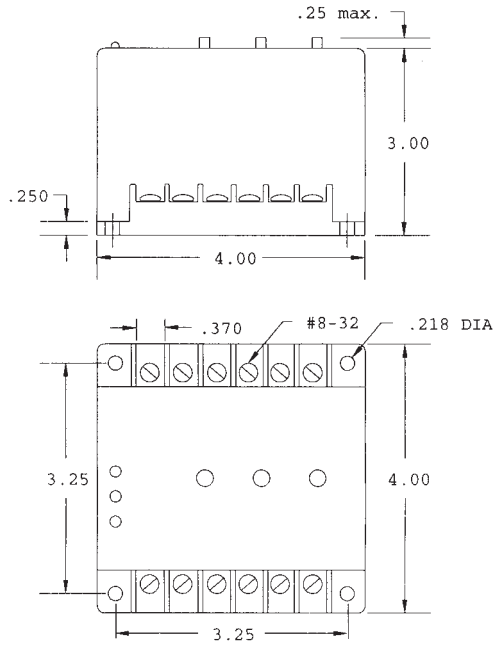

WIRING

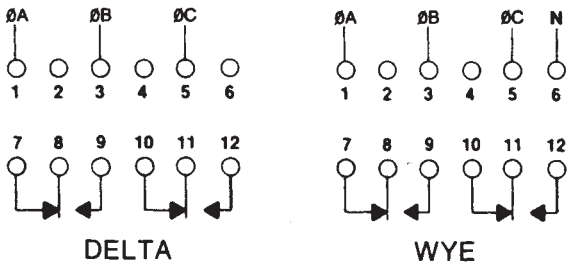

In today's industrial environment, Line Noise and Power Line Harmonics are becoming an increasing problem. **TRUE-RMS** detection may be necessary for achieving accurate Line Voltage measurement.

OPERATION

With normal operating voltages applied in the proper ABC sequence, the internal relay will energize (PICK-UP). When the voltages on any or all phases fall outside the preset Over/Under trip points for longer than the Drop-Out Time delay, the relay will de-energize (DROP-OUT). When line conditions return to normal, the PBE Series Monitor automatically resets and the internal relay energizes.

The PBE Series is UL Listed under UL File Number E55826.

SPECIFICATIONS

OUTPUT RATING	DPDT, 10 Amps Resistive, 1/4 HP 278VA @ 240 VAC	
RESET	Automatic	
PHASE SEQUENCE	ABC (Will Not Operate CBA)	
HYSTERESIS	2%	
REPEAT ACCURACY	0.1% @ Fixed Condition	
INDICATORS LED	Glows On Fault; (1) For Over, (1) For Under, (1) For Sequence	
RESPONSE TIMES	Operate	200 mSEC (approx.)
	Release	0.2 to 30 SEC, Adjustable
TEMPERATURE RATING	Operate	32° to +104°F (0° to +40°C)
	Storage	-49° to 185°F (-45° to +85°C)
ENCLOSURE	Style "E" LEXAN® Surface Mount	
WEIGHT	14 oz.	

DELTA CONNECTED

MODEL NUMBER	MAXIMUM VOLTAGE	ADJUSTABLE RANGES UNDER	OVER
PBE-120-ASE	155 VAC	90-120	120-150
PBE-230-ASE	275 VAC	185-240	208-265
PBE-400-ASE	485 VAC	325-385	415-475
PBE-440-ASE	550 VAC	390-480	440-540
PBE-480-ASE	570 VAC	400-490	460-560
PBE-575-ASE	700 VAC	500-610	540-690

All voltages referenced on this page are phase-to-phase, unless otherwise indicated.

WYE CONNECTED

MODEL NUMBER	MAXIMUM VOLTAGE	ADJUSTABLE RANGES (Phase to Neutral) UNDER	OVER
PBE-120/208-ASE	160 VAC, P to N 277 VAC, P to P	90-120	120-150
PBE-220/380-ASE	260 VAC, P to N 450 VAC, P to P	185-220	220-255
PBE-277/480-ASE	326 VAC, P to N 565 VAC, P to P	235-277	277-320

All voltages referenced on this page are phase-to-phase, unless otherwise indicated.

The **SLB Series** is designed to protect three-phase equipment against **PHASE UNBALANCE, PHASE LOSS,** and **PHASE REVERSAL** conditions.

OPERATION

With normal operating voltages in the proper ABC sequence and the 120 VAC control voltage applied, the internal relay will energize (PICK-UP). When any combination of Phase Unbalance exceeding the preset value or Phase Loss or Phase Reversal occurs for longer than the preset drop out time, the output relay will de-energize (DROP-OUT). If the control voltage is removed, the relay will de-energize.

The wide input voltage range permits use on any one of several standard line voltages without recalibrating. The unbalance detection level is adjustable from 2% to 15%.

Both Delta and Wye systems may be monitored. In Wye systems, connections to neutral are not required.

The LED indicator glows when conditions are normal.

NOTE: A balanced condition exists and the output relay will energize when there is a complete absence of voltage on all three phases (Terminals 1, 3 and 5) and the control voltage is continuously applied to (Terminals 11 and 12). For this reason, the SLB series is ideally suited for **LOAD SIDE MONITORING APPLICATIONS**.

SPECIFICATIONS

OUTPUT RATING	SPDT, 10 Amps @ 120 VAC, 5 Amps @ 240 VAC, Resistive	
PHASE SEQUENCE	ABC (Will Not Operate CBA)	
OPERATING VOLTAGE	See Table Below	
CONTROL VOLTAGE	120 VAC, 1 Phase, 60 Hz	
POWER REQUIRED	3 VA, Max.	
PHASE UNBALANCE RANGE	2% to 15%, Adjustable	
INDICATORS LED	Glows When All Conditions Are Normal	
RESPONSE TIMES	Operate Release	60 mSEC, Fixed 0.1 to 5 SEC, Adjustable
TEMPERATURE RATING	Operate Storage	32° to +104°F (0° to +40°C) -49° to 185°F (-45° to +85°C)
ENCLOSURE	Style "E" LEXAN® Surface Mount	
WEIGHT	1 lb. 2 oz.	

The SLB Series will not detect an equal and simultaneous reduction in voltage on all three lines (Brown Out).

MODEL NUMBER	OPERATING VOLTAGE	RESET	HYSTERESIS
SLB-200-ALEA	Standard 0-300; 3 Ø Line Voltages 60 Hz.	Automatic	10% of Unbalance Setting
SLB-200-ALER		Manual	None
SLB-400-ALEA	Standard 300-500; 3 Ø Line Voltages 60 Hz	Automatic	10% of Unbalance Setting

All voltages referenced on this page are phase-to-phase.

Phase Unbalance Monitor

DIMENSIONS (INCHES)

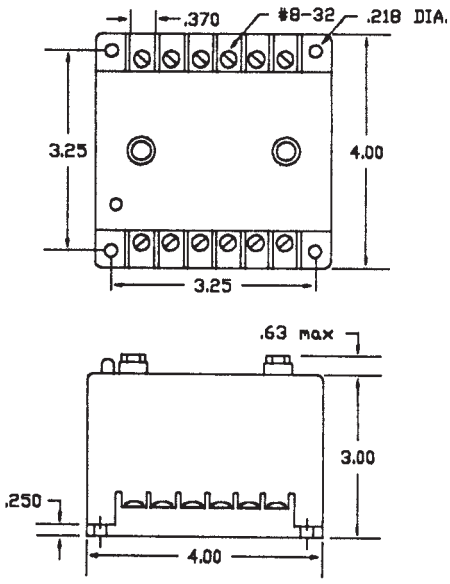

WIRING

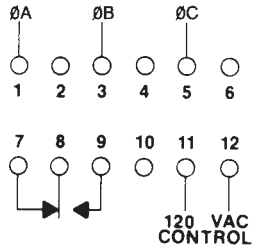

Phase Unbalance & Loss Monitor

The **SLC Series** is designed to protect 3-phase equipment against Phase **UNBALANCE** and **PHASE LOSS** conditions.

OPERATION

With normal operating voltages applied to all three phases, the internal relay will remain de-energized (DROPPED-OUT).

When a Phase Loss or Phase Unbalance exceeding the pre-selected trip point occurs, the relay will energize (PICK-UP). The SLC series is typically used in conjunction with a **SHUNT TRIP BREAKER**.

Both Delta and Wye systems may be monitored. In Wye systems, connections to neutral are not required.

NOTE: When a phase is lost while the motor is running, a condition known as regeneration occurs where a voltage is induced into the open phase nearly equal in magnitude to the normal phase-to-phase voltage. The SLC series is designed to detect this condition when properly adjusted.

DIMENSIONS (INCHES)

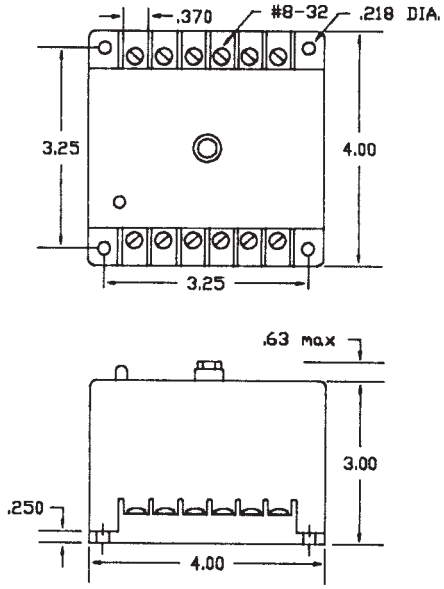

SPECIFICATIONS

OPERATING VOLTAGE	See Table Below	
TRANSIENT PROTECTION	1000 Volts For 8 mSEC	
RESET	Automatic	
PHASE UNBALANCE RANGE	2% to 10%, Adjustable	
INDICATORS LED	Glows On Fault Condition	
RESPONSE TIMES	Operate	0.08 SEC
	Release	0.7 SEC
TEMPERATURE RATING	Operate	32° to +131°F (0° to +55°C)
	Storage	-49° to 185°F (-45° to +85°C)
U.S. PATENT NUMBER	4,331,995	
WEIGHT	12.5 oz.	

WIRING

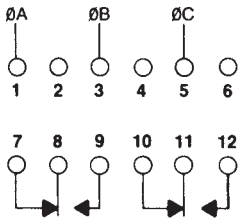

MODEL NUMBER	OPERATING VOLTAGE	POWER REQUIRED	OUTPUT RATING
SLC-120-ALE	120 VA	3 VA Max.	DPDT, 5 Amps, Resistive; 345 VA, Inductive @ 240 VAC
SLC-230-ALE	208/240 VAC		
SLC-380-ALE	380 VAC	7 VA Max.	DPDT, 3 Amps, Resistive; 360 VA, Inductive @ 600 VAC
SLC-440-ALE	440/480 VAC		

All voltages referenced on this page are phase-to-phase.

The **SLD Series** is designed to protect 3-phase equipment against **PHASE UNBALANCE, PHASE LOSS, UNDER VOLTAGE** and **PHASE REVERSAL** conditions.

OPERATION

With normal operating voltage present on all three phases in the proper phase sequence, the internal relay will energize (PICK-UP). When an incorrect phase sequence or phase loss occurs or the three-phase line voltages fall outside the preset unbalance or under voltage settings, the internal relay will de-energize (DROP-OUT). When all conditions return to normal, the relay will reset.

The Adjustable Release Delay is provided to ignore momentary voltage fluctuations that cause nuisance tripping.

Both Delta and Wye systems may be monitored. In Wye Systems, connections to neutral are not required.

NOTE: When a phase is lost while the motor is running, a condition known as regeneration occurs where a voltage is induced into the open phase nearly equal in magnitude to the normal phase-to-phase voltage. The SLD series is designed to detect this condition when properly adjusted.

The SLD Series is UL Listed under UL File Number E55826.

STYLE "E"

STYLE "A"

C UL US LISTED
IND. CONT. EQ.
496Y

C UL US

Phase & Under Voltage Monitor

SPECIFICATIONS

OPERATING VOLTAGE	See Table Below	
TRANSIENT PROTECTION	1000 Volts For 8 mSEC	
RESET	Automatic	
PHASE SEQUENCE	ABC (will not operate CBA)	
PHASE UNBALANCE RANGE	2% to 10%, Adjustable	
INDICATORS LED	Glows When All Conditions Are Normal	
RESPONSE TIMES	Operate	30 mSEC
	Release	0.1 to 20 SEC, Adjustable (on Under Voltage only); 100 mSEC on Phase Reversal and Unbalance
TEMPERATURE RATING	Operate	32° to +131°F (0° to +55°C)
	Storage	-49° to 185°F (-45° to +85°C)
U.S. PATENT NUMBER	4,331,995	
WEIGHT	13.5 oz.	

DIMENSIONS (INCHES)

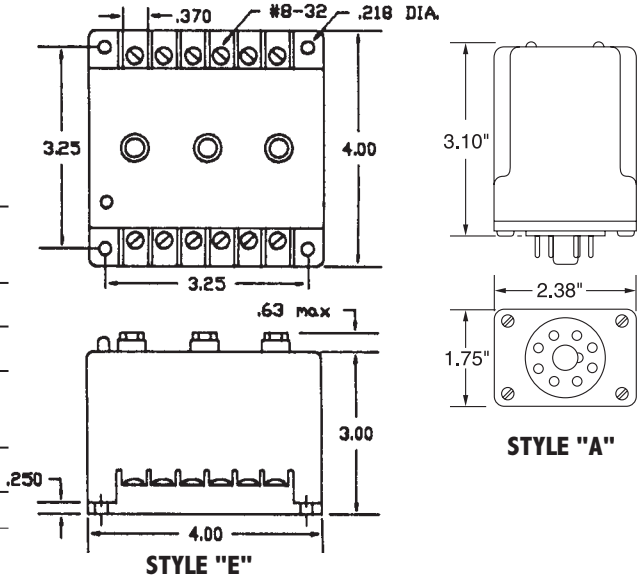

WIRING

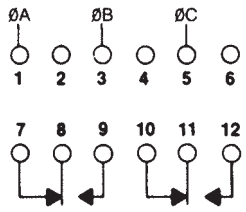

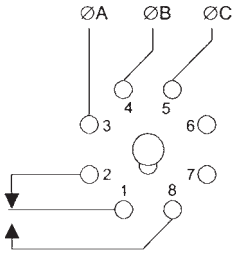

MODEL NUMBER	OPERATING VOLTAGE	UNDER VOLTAGE DROPOUT RANGE	POWER REQUIRED	HYSTERESIS	OUTPUT RATING	ENCLOSURE
SLD-120-ASA	120 VAC	95-115 Adj.	3 VA Max.	2.5 VAC	SPDT, 10 Amp, Resistive @ 240 VAC 1/2 HP @ 240 VAC	A
SLD-230-ASA	208/240 VAC	185-230 Adj.		5.0 VAC		
SLD-380-ASA	380 VAC	315-390 Adj.		10 VAC		
SLD-440-ASA	440/480 VAC	370-460 Adj.				
SLD-120-ALE	120 VAC	95-115 Adj.		5 VAC	DPDT, 5 Amps, Resistive; 345 VA, Inductive @ 240 VAC	E
SLD-230-ALE	208/240 VAC	185-230 Adj.				
SLD-380-ALE	380 VAC	315-390 Adj.	7 VA Max	10 VAC	DPDT, 3 Amps, Resistive; 360 VA, Inductive @ 600 VAC	
SLD-440-ALE	440/480 VAC	370-460 Adj.				

All voltage referenced are phase-to-phase.

C UL US
LISTED
IND. CONT. EQ.
496Y

Phase Monitor

- Models Available up to 480 VAC

PROTECTS 3-PHASE EQUIPMENT AGAINST:

- Phase Loss
- Under Voltage
- Phase Unbalance

LOCK SHAFT ADJUSTMENT FOR:

- Phase Unbalanced Percent
- Under Voltage Drop Out
- Automatic Reset
- Delta or Wye Systems

The **SLE Series** is designed to protect 3-phase equipment against **PHASE UNBALANCE, PHASE LOSS,** and **UNDER VOLTAGE**.

OPERATION

With normal operating voltage present on all three phases, the internal relay will energize (PICK-UP). When a phase loss occurs or the voltages fall outside the preset unbalance or under voltage settings, the internal relay will de-energize (DROP-OUT). The relay automatically resets when the line conditions return to normal.

Both Delta and Wye systems may be monitored. In Wye Systems, connections to neutral are not required.

NOTE: When a phase is lost while the motor is running, a condition known as regeneration occurs where a voltage is induced into the open phase nearly equal in magnitude to the normal phase-to-phase voltage. The SLE series is designed to detect this condition when properly adjusted.

The SLE Series is UL Listed under UL File Number E55826

SPECIFICATIONS

OPERATING VOLTAGE	See Table Below	
TRANSIENT PROTECTION	1000 Volts For 8 mSEC	
RESET	Automatic	
PHASE UNBALANCE RANGE	2% to 10%, Adjustable	
INDICATORS LED	Glows When All Conditions Are Normal	
RESPONSE TIMES MODELS UP TO 300 VAC	Operate	60 Milliseconds
	Release	0.5 Seconds
RESPONSE TIMES MODELS OVER 300 VAC	Operate	1 Second
	Release	2 Seconds
TEMPERATURE RATING	Operate	32° to +131°F (0° to +55°C)
	Storage	-49° to 185°F (-45° to +85°C)
U.S. PATENT NO.	4,331,995	
WEIGHT	12.5 to 13 oz.	

DIMENSIONS
(INCHES)

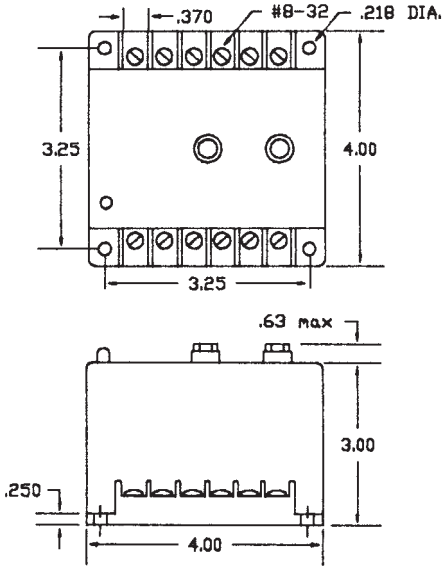

WIRING

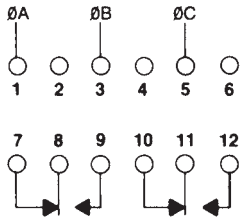

MODEL NUMBER	OPERATING VOLTAGE	UNDER VOLTAGE DROPOUT RANGE	POWER REQUIRED	HYSTERESIS	OUTPUT RATING
SLE-120-ALE	120 VAC	95-115 Adj.	3 VA Max.	5.0 VAC	DPDT, 5 Amps, Resistive; 345 VA, Inductive @ 240 VAC
SLE-230-ALE	208/240 VAC	185-230 Adj.			
SLE-380-ALE	380 VAC	315-390 Adj.	7 VA Max.	10 VAC	DPDT, 3 Amps, Resistive; 360 VA, Inductive @ 600 VAC
SLE-440-ALE	440/480 VAC	370-460 Adj.			

All voltage referenced are phase-to-phase.

The **SLH Series** is designed to protect equipment against **PHASE LOSS** (single phasing), **UNDER VOLTAGE** (brown outs), and **PHASE REVERSAL** (improper sequence).

OPERATION

When correct phase sequence and line voltage are present, the internal relay of the SLH will energize (PICK UP). When there is a phase loss, under voltage or phase reversal condition, the internal relay will de-energize (DROP-OUT). When conditions return to normal, the SLH will automatically reset.

The SLH is unique in that it has a field-adjustable hysteresis. The voltage setting is adjusted to the desired pick-up point indicated by the dial setting. Then, the hysteresis adjustment is set to the desired percentage to achieve the preferred drop-out point. When models up to 300 VAC are set at 0%, they will pick-up and drop-out at the same point, when set at 10%, the drop-out will be an average of the phase-to-phase voltages 10% below the dial setting pick-up point. Models over 300 VAC are adjustable from 0% to 15%.

The SLH is available in the standard voltage ranges (see table below). It has an LED indicator that glows when all conditions are normal. The SLH Series is UL Listed under UL File Number E55826.

C UL US
LISTED
IND. CONT. EQ.
496Y

Phase, Under Voltage Monitor with Adjustable Hysteresis

SPECIFICATIONS

OPERATING VOLTAGE	See Table Below	
POWER REQUIRED	See Table Below	
RESET	Automatic	
PHASE SEQUENCE	ABC (Will Not Operate CBA)	
HYSTERESIS	Models Up to 300 VAC	Adjustable, 0% to 10% Below Pick-up
	Models Over 300 VAC	Adjustable, 0% to 15% Below Pick-up
OUTPUT RATING	Models Up to 300 VAC	DPDT, 10 Amps @ 120 VAC, Resistive; 211 VA @ 120 VAC, Inductive
	Models Over 300 VAC	DPDT, 5 Amps @ 240 VAC, Resistive; 345 VA @ 240 VAC, Inductive
TERMINATIONS	(12) #8-32 Screw Terminals	
INDICATORS LED	Glows when all conditions are normal	
RESPONSE TIMES	See table below	
TEMPERATURE RATING	Operate	32° to +131°F (0° to +55°C)
	Storage	-49° to 185°F (-45° to +85°C)
WEIGHT	14 oz.	

DIMENSIONS (INCHES)

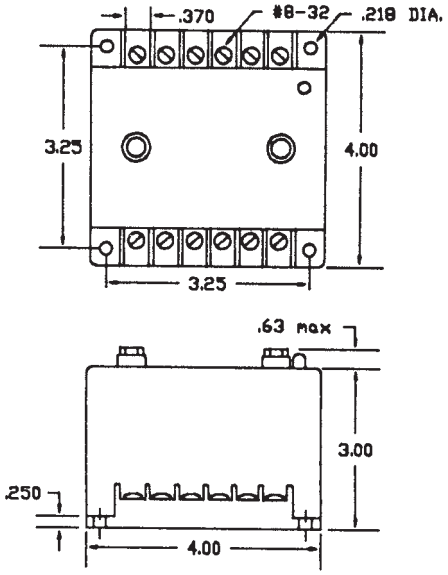

WIRING

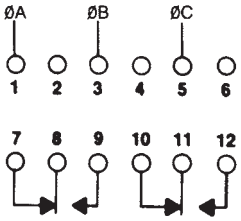

MODEL NUMBER	PICK UP VOLTAGE	RESPONSE TIMES OPERATE	RESPONSE TIMES RELEASE	OUTPUT RATING
SLH-120-ALE	95-130 V. Adj.	80 m. SEC	0.5 SEC	3 VA
SLH-230-ALE	190-270 V. Adj.	150 m. SEC	0.5 SEC	3 VA
SLH-440-ALE	430-480 V. Adj.	1.0 SEC	2.0 SEC	7 VA

All voltage referenced are phase-to-phase.

INCLUDES A DELAY-ON-MAKE TIMER

Phase & Under Voltage Monitor

The **SLJ Series** has a built-in Delay-on-Make Time Delay. The SLJ continuously monitors the three phase lines for adverse conditions such as **PHASE LOSS** (single phasing), **UNDER VOLTAGE** (brown outs), and **PHASE REVERSAL** (improper sequence). When any of these conditions occur, the internal relay will de-energize (DROP-OUT). When the fault is corrected, the field adjustable Delay-on Make delay begins. Upon completion of the time delay, the internal relay will energize (PICK-UP). Any subsequent interruptions will reset the delay period.

The SLJ's phase monitor operates the same as the SLA Series. It will drop-out for a phase loss if any phase drops below 83% of its nominal setting and it will also drop-out for under voltage if all three phases drop below 90% of its nominal setting. It is phase sequence sensitive and will not allow start-up if the three phases are reversed.

The SLJ is available in the same standard operating voltage ranges as our other Phase Monitors (see table below). The Delay-on-Make Timer is field adjustable from 0.2 to 8.0 minutes.

There are two LED indicators. The green indicator glows when all conditions are normal, and the red indicator glows when the internal relay is energized.

The SLJ is ideally suited for multiple equipment installations to stagger start equipment after a fault condition.

DIMENSIONS (INCHES)

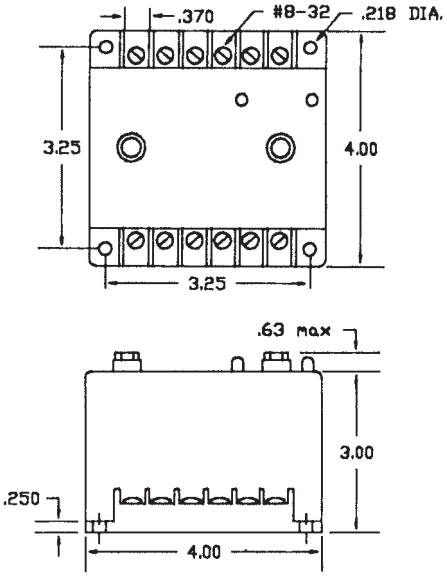

WIRING

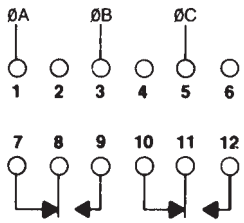

SPECIFICATIONS

OPERATING VOLTAGE	See Table Below	
OUTPUT RATING	See Table Below	
INDICATORS LED	Green LED	Glows When All Conditions Are Normal
	Red LED	Glows When Relay is Energized
RESPONSE TIMES	Operate	0.2 to 8.0 Minutes, Adjustable
	Release	See Table Below
TEMPERATURE RATING	Operate	32° to +131°F (0° to +55°C)
	Storage	-49° to 185°F (-45° to +85°C)
ENCLOSURE	Style "E" Lexan, Surface Mounted	
TERMINATIONS	(12) #8-32 Screw Terminals	
WEIGHT	14 oz.	

MODEL NUMBER	OPERATING VOLTAGE	DROP-OUT 1 Ø LOW	DROP-OUT 3 Ø LOW	PICK-UP	DELAY-ON RELEASE	OUTPUT RATING
SLJ-120-ALE	95-130 V. Adj.	79-108 V	85-117 V	1 Volt Above Drop-out	0.5 Sec	DPDT, 345 VA Inductive; 10 Amps Resistive @ 240 VAC
SLJ-230-ALE	190-270 V. Adj.	158-224 V	171-243 V			
SLJ-380-ALE	350-440 V. Adj.	290-365 V	315-396 V		2.0 Sec	DPDT, 360 VA Inductive; 3 Amps Resistive @ 600 VAC
SLJ-440-ALE	430-480 V. Adj.	357-398 V	387-432 V			

All voltage referenced are phase-to-phase.

- Models available up to 690 VAC
- Automatic or Manual Reset
- Delay-on-Make Timer
- LED Indicators for Fault Conditions
- Last Fault Memory

SCREWDRIVER ADJUSTMENT FOR:

- Time Delay
- Voltage
- Mode of Operation

PROTECTS 3-PHASE EQUIPMENT AGAINST:

- Under Voltage
- Over Voltage
- Phase Loss
- Phase Reversal
- Phase Unbalance
- Phase Shift
- Frequency Shift

C UL US
LISTED
IND. CONT. EQ.
496Y

Microprocessor Based 3-Phase Monitor

SPECIFICATIONS

VOLTAGE TRIP POINTS	Drop-Out	±10% of Setting
	Pick-Up	± 7% of Setting
FREQUENCY TRIP POINTS	Drop-Out	±4% of 60 Hz (380 V, 50 Hz)
	Pick-Up	±3% of 60 Hz (380 V, 50 Hz)
UNBALANCE TRIP POINTS	Drop-Out	7%
	Pick-Up	5%
RESET	Automatic; Manual; Automatic with Memory*	
PHASE SEQUENCE	ABC (Will Not Operate CBA)	
OUTPUT RATING	DPDT, 360 VA Inductive; 1/2 hp 3 A Resistive @ 600 VAC SLM (120, 230) ASE - DPDT, 470 VA 10A Resistive@240VAC	
TERMINATIONS	#8-32 Screw Terminals	

INDICATORS LED*

*Automatic with Memory MODE: The last fault is indicated and remains on when conditions return to normal. The indicator extinguishes only with reset or when new fault condition occurs.

Designation	Color	State	Condition
Time Delay	Green	Flashing Normal ON	Timing Output Energized
Under Voltage	Red	ON	Fault
Over Voltage	Red	ON	Fault
Phase Sequence, Shift	Red	ON	Fault
Frequency Shift	Red	ON	Fault
Unbalance	Red	ON	Fault

	Operate	
	Sampling	2 SEC
	Reset Delay	(Sampling Delay) + (1.5 seconds to 5 minute Delay) Adjustable in one (1) minute increments
	Release	
	Under Voltage	1.5 SEC, (approx.)
	Over Voltage	1.5 SEC, (approx.)
	Frequency Shift	1.5 SEC, (approx.)
	Unbalance	2.0 SEC, (approx.)
	*Phase Loss/Shift	1.0 SEC, (approx.)
TEMPERATURE RATING	Operate	32° to +131°F (0° to +55°C)
	Storage	-49° to 185°F (-45° to +85°C)
POWER REQUIRED	7 VA Typical	
TRANSIENT PROTECTION	2500 Volts for 10 ms	
ENCLOSURE	Lexan Surface Mounted	
WEIGHT	22 oz.	

DIMENSIONS (INCHES)

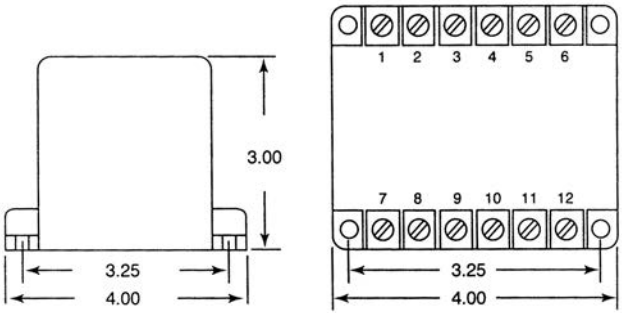

WIRING

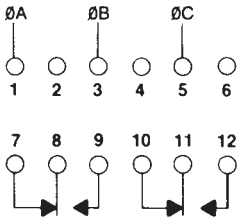

MODEL NUMBER	NOMINAL PHASE-TO-PHASE VOLTAGE SET POINTS	MAXIMUM VOLTAGE
SLM-120-ASE	105, 110, 115, 120, 125, 130	143 VAC
SLM-230-ASE	200, 210, 220, 230, 240, 250	275 VAC
SLM-380-ASE	350, 365, 380, 390, 400, 415	457 VAC
SLM-440-ASE	440, 450, 460, 470, 480, 490	540 VAC
SLM-575-ASE	525, 550, 575, 600	690 VAC

*Automatic with Memory MODE: The last fault is indicated and remains on when conditions return to normal.

The indicator extinguishes only with reset or when new fault condition occurs.

The SLM Series is UL Listed under UL File Number E55826.

STYLE "A"

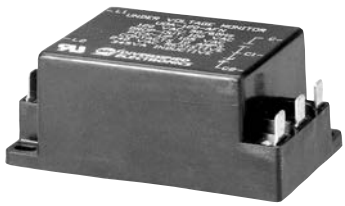

STYLE "N"

Style A only

E55826

The **UOA Series** offers protection to **SINGLE PHASE** equipment that is required to operate above a certain voltage minimum.

OPERATION

With operating voltage applied above the preset PICK-UP voltage, the internal relay will energize. When the voltage falls below the preset DROP-OUT voltage for a period longer than the release delay, the output relay will de-energize. When line conditions return above the preset PICK-UP voltage, the UOA Series automatically resets and the internal relay energizes.

The HYSTERESIS in each unit provides a differential between the PICK-UP and DROP-OUT trip points.

Single Phase Under Voltage Monitor

SPECIFICATIONS

OPERATING RATING	Style A	DPDT, 5A @ 240 VAC, Resistive; 211 VA @ 240 VAC
	Style N	SPDT, 10A @ 240 VAC, Resistive; 180 VA, Inductive, @ 120 VAC
RESPONSE TIMES	Operate	50 mSEC. (approx.) (500 mSEC. on 12 VDC units)
	Release	0.5 SEC (approx.)
TEMPERATURE RATING	Operate	32° to +131°F (0° to +55°C)
	Storage	-49° to 185°F (-45° to +85°C)
POWER REQUIRED	Models Up To 110 VDC: 3 Watts, Max. Models Up To 300 VAC: 5 VA, Max.	
WEIGHT	5 oz. to 5.5 oz.	

MODEL NUMBER	DROP-OUT VOLTAGE	PICK-UP VOLTAGE	HYSTERESIS VOLTAGE
UOA-24-A*A	19-27 VAC	21-29 VAC	2
UOA-120-A*A	97-130 VAC	102-135 VAC	5
UOA-208-A*A	177-222 VAC	185-230 VAC	8
UOA-240-A*A	205-250 VAC	215-260 VAC	10
UOA-12-D*A	9-14 VDC	10-15 VDC	1
UOA-24-D*A	19-27 VDC	21-29 VDC	2
UOA-48-D*A	38-53 VDC	40-55 VDC	2
UOA-110-D*A	92-125 VDC	97-130 VDC	5
UOA-220-D*A	185-230 VDC	194-239 VDC	9
UOA-240-D*A	205-250 VDC	215-260 VDC	10
UOA-120-AFN	100 VAC	105 VAC	5
UOA-208-AFN	180 VAC	188 VAC	8
UOA-220-AFN	180 VAC	187 VAC	7
UOA-230-AFN	190 VAC	198 VAC	8
UOA-240-AFN	202 VAC	210 VAC	8

*Adjustments - F = Fixed
K = Knob
L = Locknut

WIRING

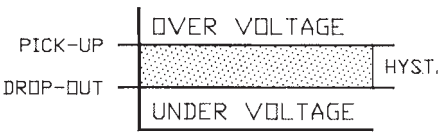

WIRING DIAGRAMS
(SHOWN IN DE-ENERGIZED STATE)

PLUG-IN MODEL
Style A

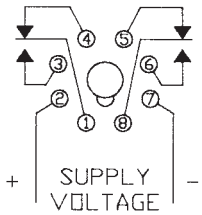

(DC POLARITY SHOWN)

SURFACE MOUNTED
Style N

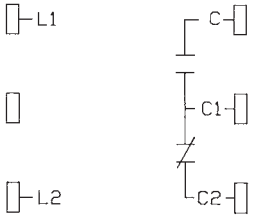

RB-08 or PF083A

The **VBA Series** offers protection to **SINGLE PHASE** equipment that is required to operate between two voltage limits. Supply voltage is monitored for a preselected **UNDER** and **OVER** voltage limit.

OPERATION

With normal operating voltage applied, the internal relay will energize (PICK-UP). When the voltage falls outside the preset Over/Under trip points for longer than the release delay, the relay will de-energize (DROP-OUT). When line conditions return to normal, the VBA Series automatically resets and the internal relay energizes.

The HYSTERESIS in each unit on the Under and Over limits provides a differential between the PICK-UP and DROP-OUT trip points.

STYLE "N"

STYLE "A"

E55826
Style A only

Single Phase Voltage Band Monitor

WIRING

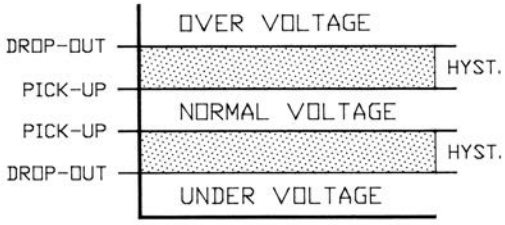

WIRING DIAGRAMS
(SHOWN IN DE-ENERGIZED STATE)

PLUG-IN MODEL
Style A

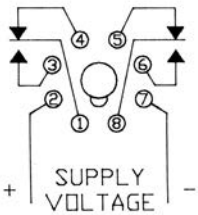

(DC POLARITY SHOWN)

RB-08 or PF083A

SURFACE MOUNTED
Style N

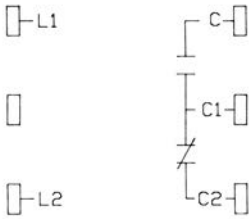

SPECIFICATIONS

POWER REQUIRED	Models Up To 110 VDC: 3 Watts, Max. Models Up To 300 VAC: 5 VA, Max.	
OUTPUT RATING	Style A	DPDT, 5A @ 240 VAC, Resistive; 211 VA @ 240 VAC
	Style N	SPDT, 10A @ 240 VAC, Resistive; 180 VA, @ 120 VAC
RESPONSE TIMES	Operate	50 mSEC (approx.) (500 mSEC on 12 VDC units)
	Release	0.5 SEC (approx.)
TEMPERATURE RATING	Operate	32° to +131°F (0° to +55°C)
	Storage	-49° to 185°F (-45° to +85°C)
WEIGHT	5 oz.	

MODEL VOLTAGE	NOMINAL VOLTAGE	PICK-UP UNDER VOLTAGE	PICK-UP OVER VOLTAGE	HYSTERESIS VOLTAGE
VBA-24-A*A	24 VAC	19-24	24-29	2
VBA-120-A*A	120 VAC	90-120	120-150	5
VBA-208-A*A	208 VAC	185-208	208-240	8
VBA-240-A*A	240 VAC	200-240	240-270	10
VBA-12-D*A	12 VDC	10-12	12-15	1
VBA-24-D*A	24 VDC	19-24	24-29	1
VBA-28-D*A	28 VDC	22-28	28-34	1
VBA-48-D*A	48 VDC	38-48	48-58	2
VBA-110-D*A	110 VDC	85-110	110-135	5
VBA-24-AFN	24 VAC	21.6	26.4	0
VBA-120-AFN	120 VAC	108	132	0
VBA-208-AFN	208 VAC	187	229	0
VBA-220-AFN	208/240 VAC	198	242	0
VBA-230-AFN	230 VAC	207	253	0
VBA-240-AFN	240 VAC	216	264	0

*Adjustments - F = Fixed
K = Knob
L = Locknut

APPLICATION NOTES – WIRING DIAGRAMS

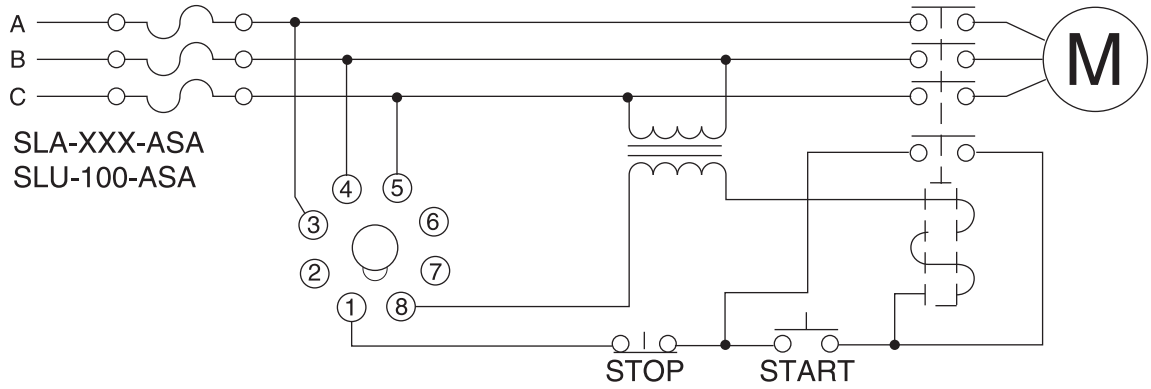

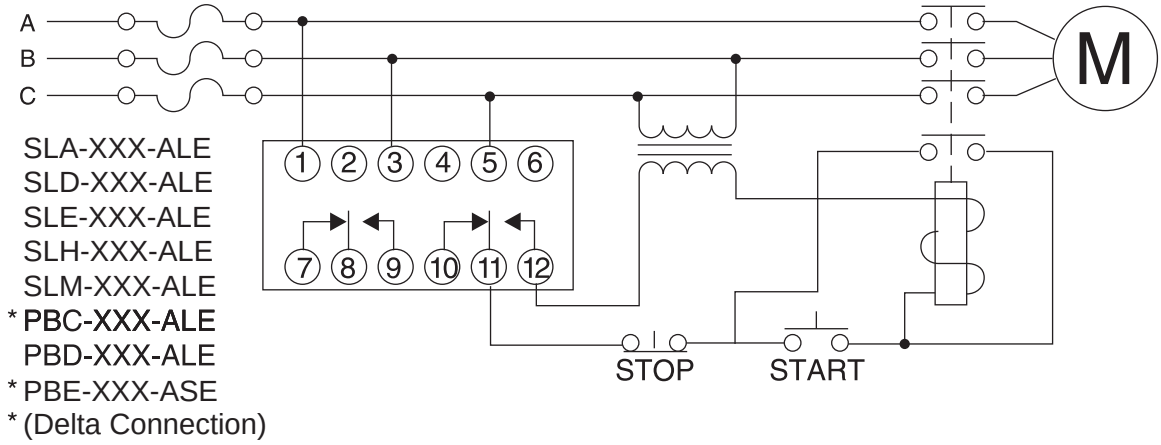

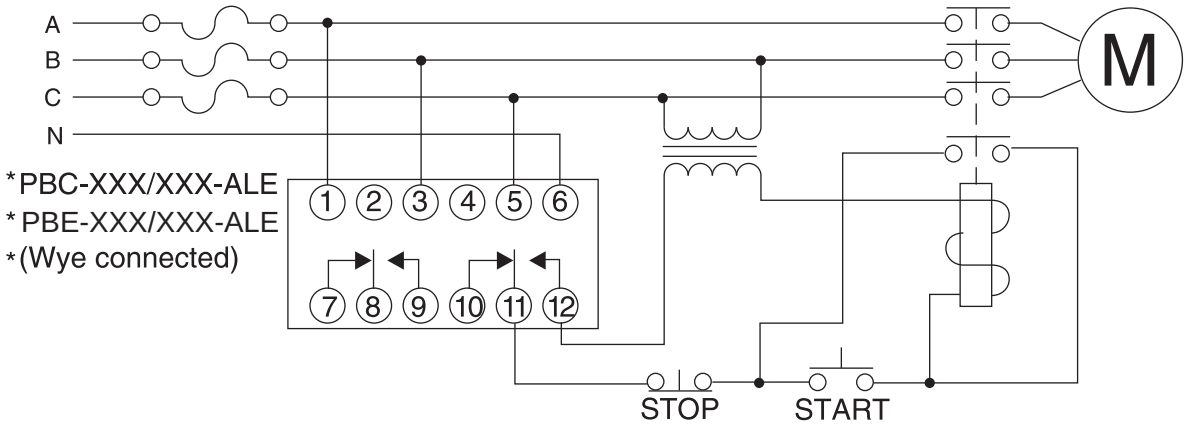

APPLICATION NOTES – WIRING DIAGRAMS

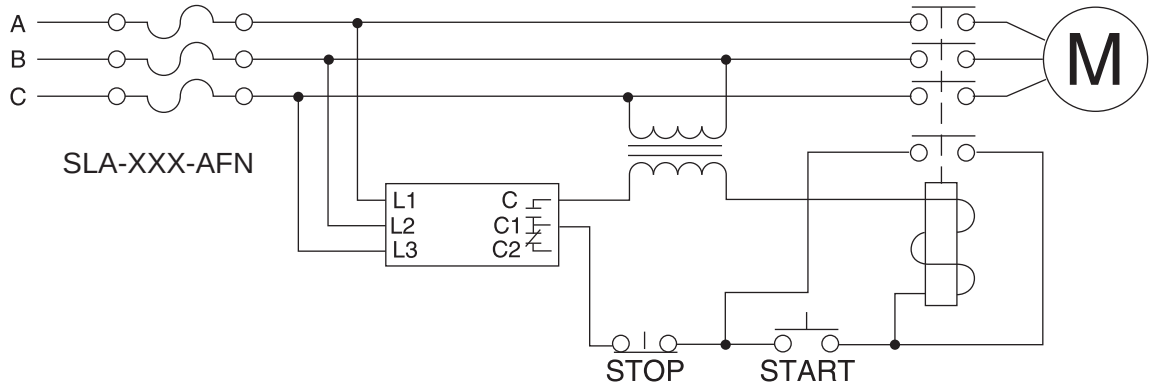

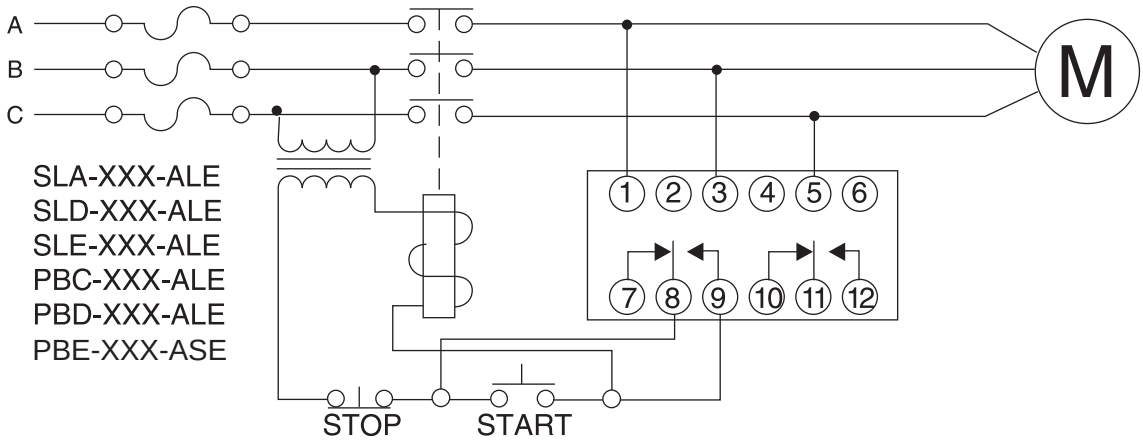

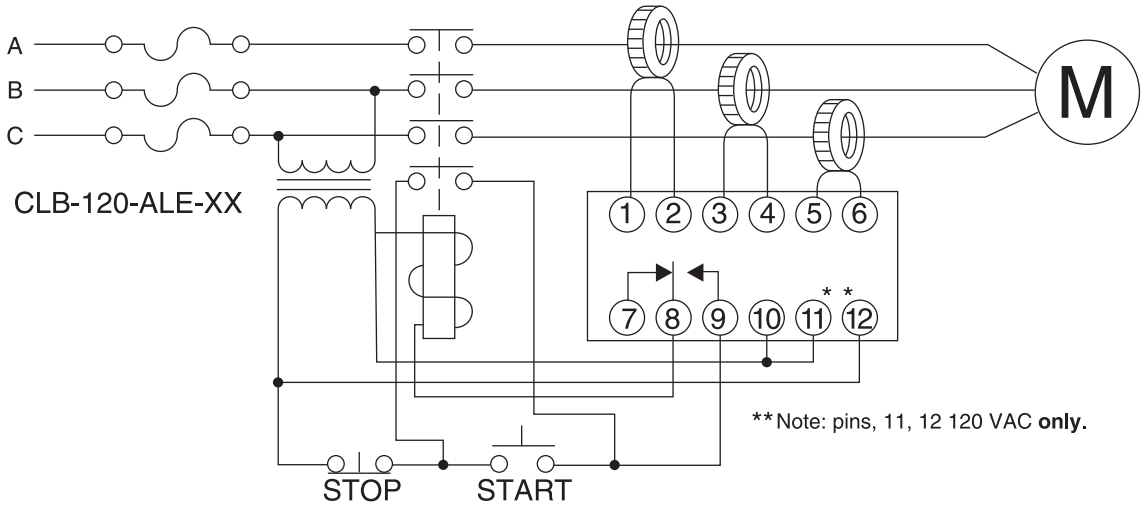

E55826

Motor Auto-Restart Relay

OPERATION

The MAR series provides automatic restart to a motor by bypassing the start switch to re-energize M1 starter coil following a momentary drop or interruption of the control voltage. When control voltage drops below the under voltage trip point while the motor is running, the under voltage delay begins. If control voltage returns above the restart voltage point before the under voltage delay expires, the adjustable restart delay begins. Upon expiration of the restart delay, the internal relay energizes for the duration of the output interval providing restart. If control voltage fils for longer than the under voltage time delay or the motor was not initially running when control voltage failed, the unit will not restart the motor after restoration of poser. Instead a manual restart is required. This relay distinguishes between control voltage failures and stop pushbutton operations. A stop pushbutton operation de-energizes the output relay and terminates the timing sequences preventing an automatic restart.

SPECIFICATIONS

CONTROL VOLTAGE	120 VAC 50/60 Hz
INPUT SPECIFICATIONS	Under Voltage: 92 VAC Factor Preset (70-100 VAC Internal Adjust) Restart Voltage: 102 VAC Factor Preset (10 VAC ±10% Above U.V.)
OUTPUT	SPDT Relay, Pilot Duty B150, 360 VA 10 Amps @ 120 VAC Resistive 30,000 Operations Electrical @ Full Load
POWER REQUIRED	3 VA Max
TEMPERATURES	Operate: 0°C to 55°C Storage: -45°C to 85°C
ENCLOSURE	Style Extended "A" LEXAN® Dust Cover
TERMINATIONS/ FUNCTION	8 Pin Plug-in (Model AAA) 8 Pin Plug-in with OL Relay L2 Disconnect Feature (Model ABA) 11 Pin Plug-in (Model ACA) 11 Pin Plug-in with OL Relay L2 Disconnect Feature (Model ADA)

DIMENSIONS

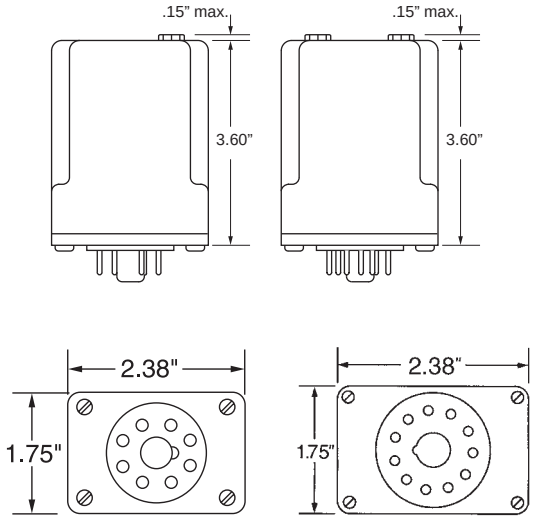

WIRING

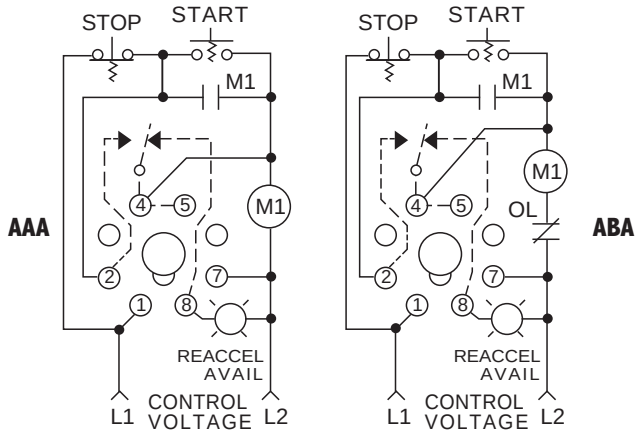

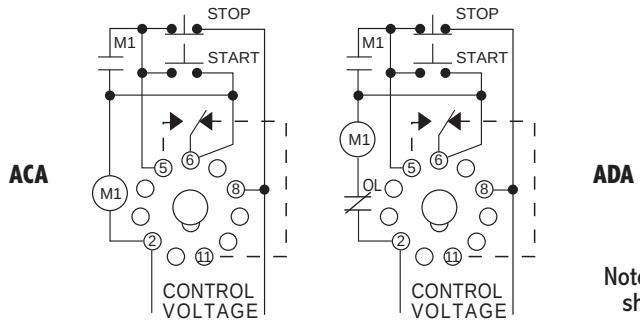

Note: Wiring must be exactly as shown for proper operation

ORDERING INFORMATION

			Delay Range
MODEL NUMBER	MAR 120		
CONTROL VOLTAGE			
120 VAC 50/60 HZ	120		
TERMINATIONS/FUNCTION			
8 Pin Plug-in		AAA	D
8 Pin Plug-in with OL Relay L2 Disconnect Feature		ABA	D
11 Pin Plug-in		ACA	A or C
11 Pin Plug-in with OL Relay L2 Disconnect Feature		ADA	B

DELAY RANGE DESCRIPTIONS

A — U.V. 0.2 to 6.0 sec, Restart Delay 0.2 to 60 sec.
Restart Output Interval - Continuous

B — U.V. 0.2 to 6.0 sec, Restart Delay 0.2 to 60 sec.
Restart Output Interval - 5.0 sec (fixed)

C — U.V. 0.2 to 10.0 sec, Restart Delay 0.2 to 60 sec.
Restart Output Interval - 1.0 sec (fixed)

D — U.V. 4.0 sec (fixed), Restart Delay 2.0 to 120 sec.
Restart Output Interval - 5.0 sec (fixed)

Under voltage screwdriver adjustable ranges ± 10%
Restart delay screwdriver adjustable ranges ± 10%
Under voltage and restart output interval fixed ranges ± 10%

E55826

Liquid Level Pump Controller

OPERATIONS

The ATC Diversified LPC Series is a conductive liquid level controller that uses two probes to sense tank level. There are two modes of operation that are user selectable.

Drain (Pump Down): The output relay will pick-up and the LED will turn on when the liquid level reaches the high level probe. When the liquid level falls below the low level probe the relay will drop-out and the LED will turn off.

Fill (Pump UP): The output relay will pick-up and the LED will turn on when the liquid level falls below the low level probe. When the liquid level reaches the high level probe the relay will drop-out and the LED will turn off.

SPECIFICATIONS

SUPPLY VOLTAGE	24V AC, 120V AC, 240V AC (+10/-20%) See ordering information below
SUPPLY VOLTAGE	Pulsed 5V DC, at terminals
SENSITIVITY	Adjustable: 1K ±500 Ω at low end 100K Ω ±25% at high end
UNIT OPERATION	Drain or Fill (User Selectable)
OUTPUT RATING	One SPDT, 5 Amps Resistive @ 240V AC
ISOLATION	1,500 volts
POWER CONSUMPTION	24 V Model 6VA, 120 V Model 6VA, 240 V Model 8VA
TEMPERATURES	Operate: -20°C to +60°C Storage: -40°C to +80°C
TERMINATIONS	8-PIN OCTAL HEADER
LED INDICATORS	Red LED illuminates when relay is active
ENCLOSURE	Style "A" 8 Pin Plug-In
AGENCY APPROVALS	cULus E55826

WIRING

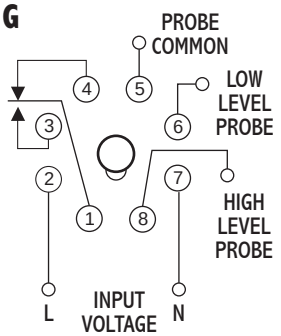

DIMENSIONS

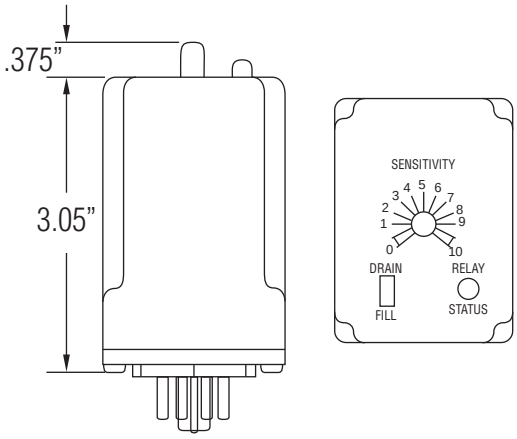

MODEL NUMBER

LPC	XXX	AAA

SUPPLY VOLTAGE

24 Volts AC	24
120 Volts AC	120
240 Volts AC	240

ACCESSORY:

CPR Series Conductive Probes
Stainless Steel Tip, PVC Cable, Corrosion Res.

ORDERING INFORMATION

CPR	P	S	XX

SERIES

SHIELD MATERIAL "A"
P - PVC (66°C)

PROBE TIP MATERIAL"B"
S - 316 STAINLESS STEEL

LENGTH OF WIRE "C"
10 - 10 FEET 20 - 20 FEET
30 - 30 FEET 40 - 40 FEET
- LENGTH IN FEET

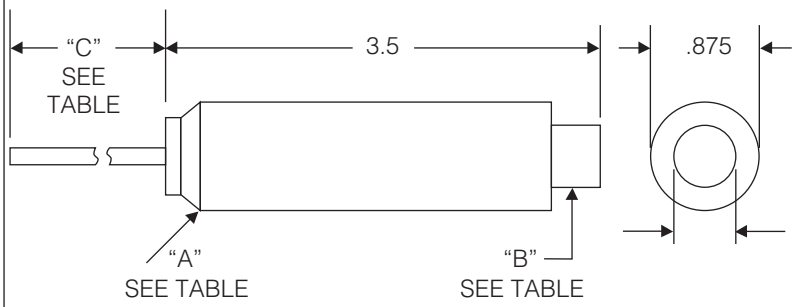

CURRENT MONITORS

ATC-Diversified Electronics has a Current Monitor available to fit almost any monitoring application. The operation of the **CM Series**, AC Current Monitor/Relays, is based on an internal current transformer magnetically coupling the solid state sensing circuitry to the line being monitored. The operation of the **CD Series**, DC Current Monitor/Relays, is based on an internal Hall-effect device with a magnetic concentrator coupling the solid state sensing circuitry to the line being monitored. When the monitored current reaches a preset threshold point, an internal relay switches. The heavy duty contacts are used for instrumentation or signaling alarm circuits. The current sensing range of the ATC-Diversified Electronics AC Current Monitor/Relays can be increased by the use of an external Current Transformer. With the use of external Current Transformers you can monitor the current on almost any application. The feature matrix below shows the Current Monitor Series available from ATC-Diversified Electronics and highlights their features and specifications.

TYPICAL APPLICATIONS

The following are some typical applications for ATC-Diversified Electronics Current Monitors:

- Sense current demand level
- Run time totalizer
- Detect conveyor load jam
- Detect heater element failure
- Detect the use of dull bits or blades
- Detect runway lights and radio tower light failures
- Remote motor sensing
- Sense load loss
- Detect broken fan belts or chains

FEATURE MATRIX

	SENSING FEATURES				CONTROL VOLTAGE			ADJUSTABLE CURRENT RANGE						ENCLOSURE			RESET		TIME DELAY					
SERIES	OVER CURRENT	UNDER CURRENT	THREE PHASE UNBALANCE	SELF POWERED	24 VDC	24 VAC	120 VAC	0.25 (0.05 TO 0.25 AMPS)	1 (0.2 TO 1.0 AMPS)	5 (1.0 TO 5.0 AMPS)	10 (2.0 TO 10 AMPS)	20 (4.0 TO 20.0 AMPS)	30 (6.0 TO 30 AMPS)	"A" STYLE PLUG-IN	"D" STYLE SURFACE MOUNT	"E" STYLE SURFACE MOUNT	AUTOMATIC	MANUAL	FIXED (OPERATE)	ADJUSTABLE (OPERATE)	FIXED (RELEASE)	ADJUSTABLE (RELEASE)	UL RECOGNIZED	UL RECOGNIZED FOR CANADA
CBA	●	●					●		●	●	●	●	●			●	●		●		●			
CDD	●	●					●		●	●	●	●				●	●			●		●		
CDO	●						●		●	●	●	●				●	●			●	●			
CDU		●					●		●	●	●	●				●	●		●			●		
CLB	●		●				●			●	●					●	●	●	●		●			
CMB	●				●	●	●		1-10 amps fixed					●			●		●		●		●	●
CMD	●	●			●	●	●	●	●	●	●	●				●	●			●		●		
CMG				●					20-36 amp fixed (0100 series only)						●		●		●		●		●	●
CMI	●					●	●	●	●	●	●	●				●		●	●		●			
CML	●					●	●	●	●	●	●	●		●		●		●		●	●			
CMO	●				●	●	●	●	●	●	●	●		●		●	●			●	●			
CMU		●			●	●	●	●	●	●	●	●		●		●	●		●			●		

The **CBA Series** is used to detect **UNDER** and **OVER CURRENT** conditions. When the monitored current is within the normal current band, both internal relays are de-energized (Drop-out). When the current rises above the over current setting for longer than 1.0 second, the over current relay energizes (Pick-up). If the current falls below the under current setting for longer than 1.0 second, the under current relay energizes. When the monitored current returns to normal, the relays will automatically reset. The over and under current trip points are independently adjustable.

An External CT may be used to extend the range of the Current Monitor.

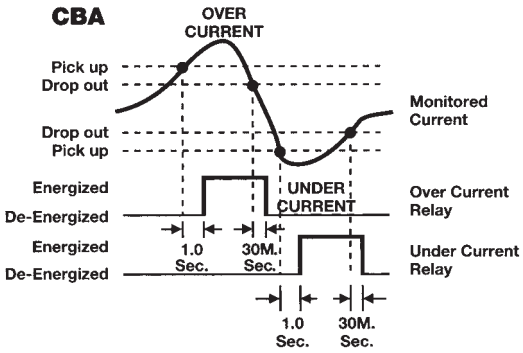

AC Current Band Monitor

SPECIFICATIONS

CONTROL VOLTAGE	120 VAC, 50/60 Hz	
TRIP POINTS	Over Current	
	Pick-up	See Table Below
	Drop-out	2% below Pick-up
	Under Current	
	Pick-up	See Table Below
	Drop-out	2% above Pick-up
OUTPUT	10 Amps @ 120 VAC, Resistive	
HYSTERESIS	2%	
RESPONSE TIME	Operate	1.0 SEC
	Release	30 mSEC
INDICATORS	LED's Show Over/Under Current Status	
RESET	Automatic	
TEMPERATURE RATING	Operate	32° to 131°F (0° to +55°C)
	Storage	-49° to 185°F (-45° to +85°C)
CONTACT ARRANGEMENT	(2) Form C Contacts. One each for Over/Under	
ENCLOSURE	Lexan Surface Mounted; #8-32 Screw Terminals	
WEIGHT	16 oz.	

MODEL NUMBER	UNDER CURRENT RANGE	OVER CURRENT RANGE
CBA-120-ALE-1	0.2 to 1.0 amps, Adjustable	0.2 to 1.0 amps, Adjustable
CBA-120-ALE-5	1.0 to 5.0 amps, Adjustable	1.0 to 5.0 amps, Adjustable
CBA-120-ALE-10	2.0 to 10 amps, Adjustable	2.0 to 10 amps, Adjustable
CBA-120-ALE-20	4.0 to 20 amps, Adjustable	4.0 to 20 amps, Adjustable
CBA-120-ALE-30	6.0 to 30 amps, Adjustable	6.0 to 30 amps, Adjustable
CBA-120-ALE-40	8.0 to 40 amps, Adjustable	8.0 to 40 amps, Adjustable

DIMENSIONS (INCHES)

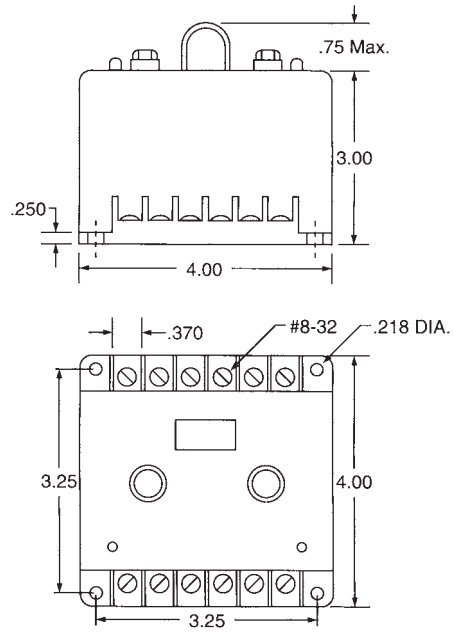

WIRING

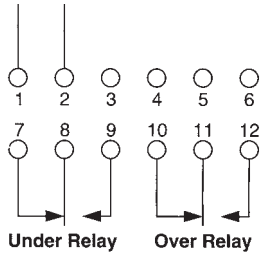

The **CDD Series** may be used as an **OVER CURRENT** Monitor **OR** an **UNDER CURRENT** Monitor. The CDD has **adjustable Delay-on-Operate** and **adjustable Delay-on-Release** time delays. When the current exceeds the preset current trip point for longer than the Delay-on-Operate time delay, the internal relay will energize (Pick-up). When the current drops below the preset current trip point for longer than the Delay-on-Release time delay, the internal relay will de-energize (Drop-out). When used as an Over Current Monitor the Delay-on-Operate time delay is used to override inrush periods. When used as an Under Current Monitor, the Delay-on-Release timer is used to override a temporary under current condition.

CDD

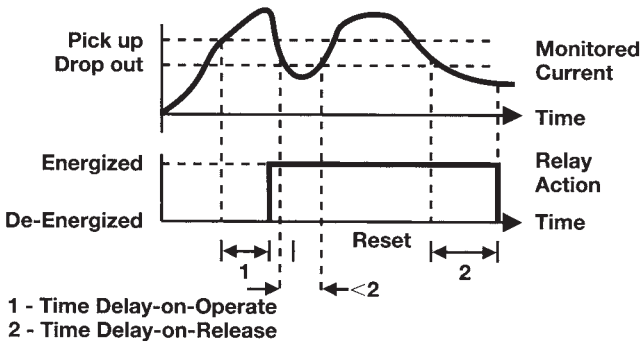

Universal DC Current Monitor

SPECIFICATIONS

CONTROL VOLTAGE	120 VAC, 50/60 Hz	
TRIP POINTS	Over Current	
	Pick-up	See order information
	Drop-out	5% below Pick-up
OUTPUT	SPDT, 10 Amps @ 240 VAC Resistive	
HYSTERESIS	5%	
RESPONSE TIME	Operate	0.2 to 10 SEC, Adjustable
	Release	0.2 to 10 SEC, Adjustable
INDICATORS	Trip (Amber)	Glows when current is above the trip point
	Relay (Green)	Glows when Relay is energized
RESET	Automatic	
TEMPERATURE RATING	Operate	32° to 131°F (0° to +55°C)
	Storage	-49° to 185°F (-45° to +85°C)
ENCLOSURE	Lexan Surface Mounted; #8-32 Screw Terminals	
WEIGHT	20 oz.	

DIMENSIONS (INCHES)

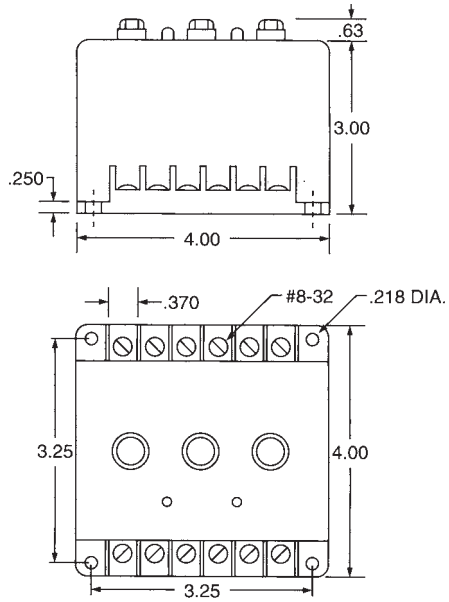

WIRING

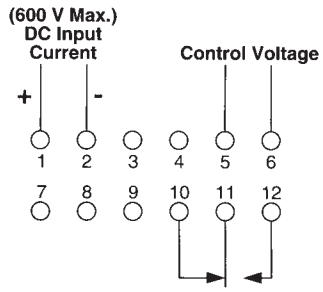

MODEL NUMBER

MODEL NUMBER	CDD	120	A	L	E	
CONTROL VOLTAGE						
120 Volts		120				
TYPE OF VOLTAGE						
AC			A			
ADJUSTMENT						
Lockshaft				L		
FEATURES						
0.2 to 1 amp adj.						1
0.5 to 2.5 amps adj.						2.5
1.0 to 5.0 amps adj.						5
2.0 to 10 amps adj.						10
4.0 to 20 amps adj.						20

The **CDO Series** is used to detect **OVER CURRENT** conditions. The internal relay energizes (Pick-up) when the monitored current exceeds the preset trip point for longer than the adjustable time delay. The delay is incorporated to prevent nuisance tripping caused by inrush currents. The CDO has an automatic reset feature. The internal relay de-energizes (Drop-out) when the current drops 5% below the preset trip for longer than 0.2 seconds.

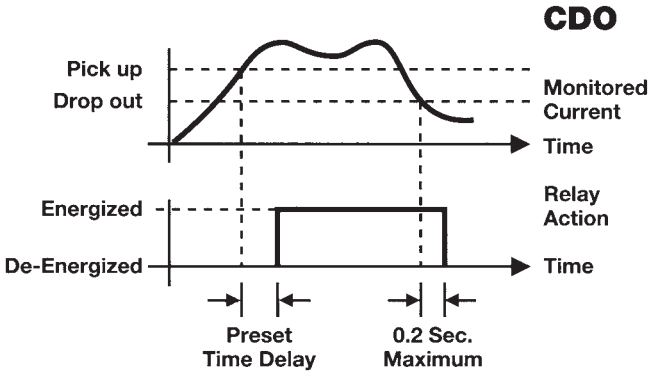

DC Over Current Monitor

SPECIFICATIONS

CONTROL VOLTAGE	120 VAC, 50/60 Hz	
TRIP POINTS	Over Current	
	Pick-up	See order information
	Drop-out	5% below Pick-up
OUTPUT	SPDT, 10 Amps @ 240 VAC Resistive	
HYSTERESIS	5%	
RESPONSE TIME	Operate	0.2 to 10 SEC, Adjustable
	Release	0.2 SEC.
INDICATORS	Trip (Red)	Glows On Over Current
	Relay (Green)	Glows when Relay is energized
RESET	Automatic	
TEMPERATURE RATING	Operate	32° to 131°F (0° to +55°C)
	Storage	-49° to 185°F (-45° to +85°C)
ENCLOSURE	Lexan Surface Mounted; #8-32 Screw Terminals	
WEIGHT	17 oz.	

DIMENSIONS (INCHES)

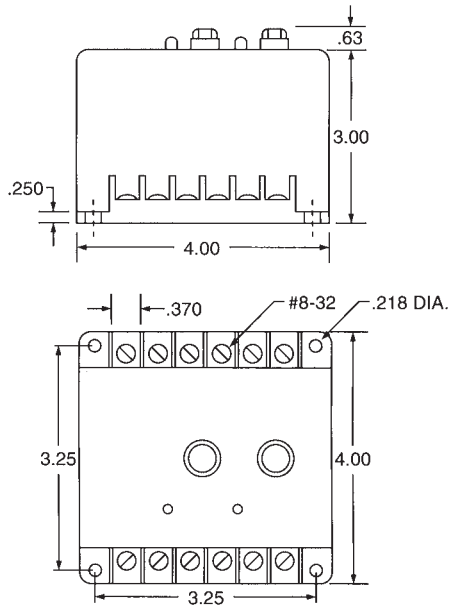

MODEL NUMBER

MODEL NUMBER	CDO	120	A	L	E	
CONTROL VOLTAGE						
120 Volts		120				
TYPE OF VOLTAGE						
AC			A			
ADJUSTMENT						
Lockshaft				L		
FEATURES						
0.2 to 1 amp adj.						1
0.5 to 2.5 amps adj.						2.5
1.0 to 5.0 amps adj.						5
2.0 to 10 amps adj.						10
4.0 to 20 amps adj.						20

WIRING

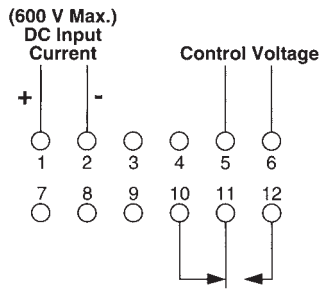

OPERATION

The **CDU Series** is used to detect **UNDER CURRENT** conditions. The internal relay is energized (Pick-up) when the monitored current is above the preset trip point. The relay de-energizes (Drop-out) when the current falls below the trip point for longer than the adjustable delay. The delay is incorporated to prevent nuisance tripping caused by momentary line dips. The relay re-energizes when the current rises 5% above the Drop-out trip point for longer than 0.2 seconds. The relay has the automatic reset feature.

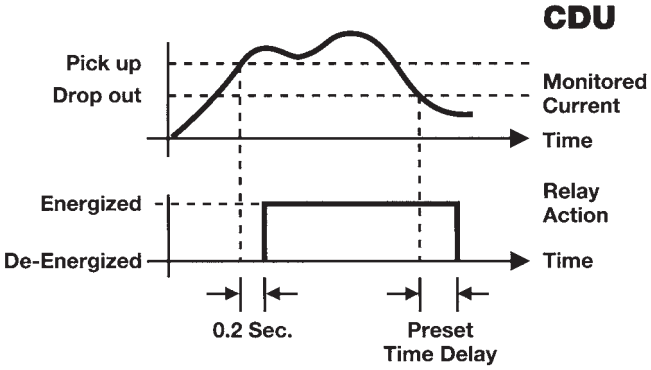

DC Under Current Monitor/Relays

SPECIFICATIONS

CONTROL VOLTAGE	120 VAC, 50/60 Hz	
TRIP POINTS	Over Current	
	Pick-up	5% above Drop-out
	Drop-out	See order information
OUTPUT	SPDT, 10 Amps @ 240 VAC Resistive	
HYSTERESIS	5%	
RESPONSE TIME	Operate	0.2 SEC
	Release	0.2 to 10 SEC, Adjustable
INDICATORS	Trip (Green)	Glows When Current is Above Preset Current Trip
	Relay (Green)	Glows when Relay is energized
RESET	Automatic	
TEMPERATURE RATING	Operate	32° to 131°F (0° to +55°C)
	Storage	-49° to 185°F (-45° to +85°C)
ENCLOSURE	Lexan Surface Mounted; #8-32 Screw Terminals	
WEIGHT	17 oz.	

DIMENSIONS (INCHES)

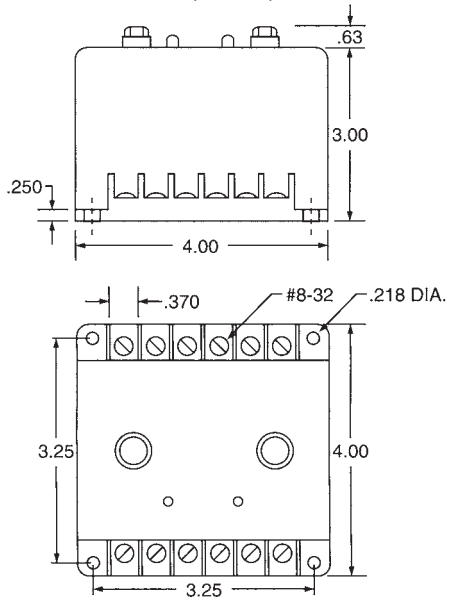

WIRING

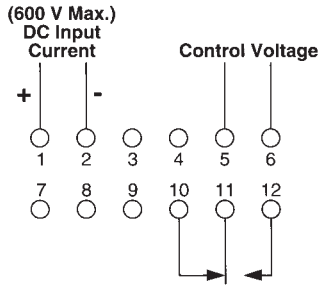

MODEL NUMBER

MODEL NUMBER	CDU	120	A	L	E	
CONTROL VOLTAGE						
120 Volts		120				
TYPE OF VOLTAGE						
AC			A			
ADJUSTMENT						
Lockshaft				L		
FEATURES						
0.2 to 1 amp adj.						1
0.5 to 2.5 amps adj.						2.5
1.0 to 5.0 amps adj.						5
2.0 to 10 amps adj.						10
4.0 to 20 amps adj.						20

3-Phase Current Unbalance & Over Current Monitor

OPERATION

The **CLB Series** is designed to protect three phase equipment against **CURRENT UNBALANCE** and **OVER CURRENT** conditions.

The control voltage is continuously applied to supply the sensing circuitry and the internal relay. When the current of any phase approximately 20% above the maximum operating current, the inrush delay begins. This delay disables the over current sensors while high inrush currents are present. Any time the currents are outside the preset limits after completion of the inrush delay, the internal relay will de-energize (Drop-out). An External CT may be used to extend the range of the current monitor.

A 2% differential (hysteresis) between Pick-up and Drop-out is incorporated to prevent chattering when operated in the automatic reset mode and the current is at the trip point.

The reset mode is selected as follows:

AUTOMATIC: Place a jumper between pins ten (10) and eleven (11).

MANUAL: Place a normally open switch between pins ten (10) and eleven (11). When there is a loss and reapplication of the control voltage, the external switch must be closed before the circuit will again become operative.

SPECIFICATIONS

OPERATING VOLTAGE	3-Phase, 50/60 Hz, 600 V max	
CONTROL VOLTAGE	120 VAC, 50/60 Hz	
OVER CURRENT	See Table for Adjustable Ranges	
UNBALANCE RANGE	5% to 25%, Adjustable	
INRUSH DELAY	0.1 To 10 SEC, Adjustable; Initiated When Current of Any Phase rises 20% Above the Max. Operating Current	
OUTPUT	SPDT, 10 amp @ 240 VAC Resistive	
HYSTERESIS	2% of Unbalance Setting	
RESPONSE TIME	Operate	1 Second, Max.
	Release	100 mSEC
INDICATOR	LED Glow When All Conditions Are Normal	
RESET	Automatic or Manual	
TEMPERATURE RATING	Operate	32° to 131°F (0° to +55°C)
	Storage	-49° to 185°F (-45° to +85°C)
WEIGHT	13 oz.	

DIMENSIONS (INCHES)

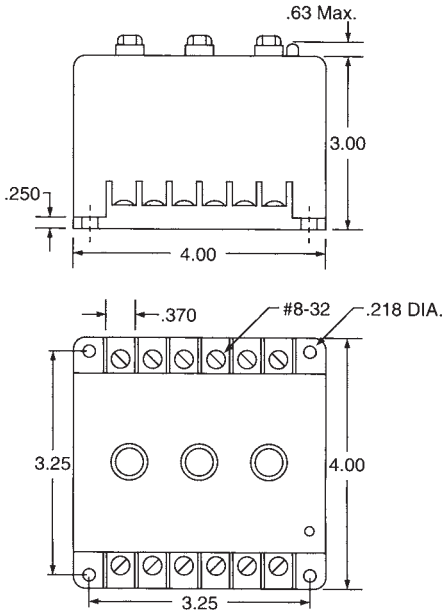

WIRING

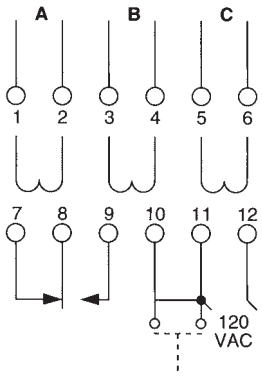

MODEL NUMBER	CONTROL RANGE	OVER CURRENT RANGE
CLB-120-ALE-5	120 VAC	1.0 to 5.0 amps, Adjustable
CLB-120-ALE-10	120 VAC	2.0 to 10 amps, Adjustable

OPERATION

The **CMB Series** relay is used to detect the presence of AC current. When the monitored current exceeds the trip point for longer than 30 milliseconds, the internal relay energizes. When the monitored current drops below the trip point for longer than 0.5 seconds, the internal relay de-energizes. The Delay-on-Release is incorporated to prevent nuisance tripping caused by momentary dips in the load line.

An External CT may be used to extend the range of the Current Monitor.

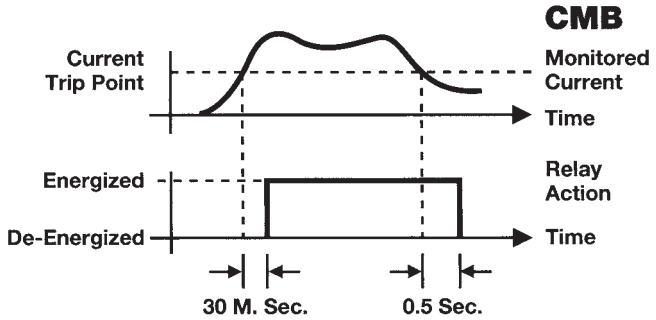

AC Go/No-Go Current Monitor/Relay

- Easy Installation
- No physical connection to the AC line that is being monitored
- Magnetically coupled by passing supply line through protruding Current Transformer
- 8-Pin, Plug-in

DIMENSIONS (INCHES)

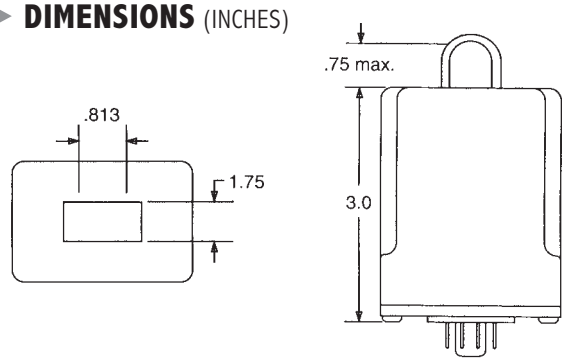

WIRING

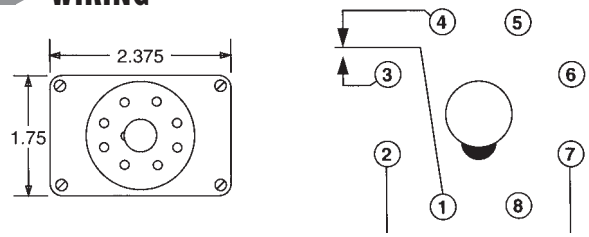

MODEL NUMBER

MODEL NUMBER	CMB			F	A	
CONTROL VOLTAGE						
24 Volts AC		24	A			
24 Volts DC (Not c UL us)		24	D			
120 Volts AC		120	A			
CURRENT TRIP POINTS						
1 amp						1
2 amps						2
3 amps						3
4 amps						4
5 amps						5
6 amps						6
7 amps						7
8 amps						8
9 amps						9
10 amps						10

SPECIFICATIONS

CONTROL VOLTAGE	24 or 120 VAC; 50/60 Hz, 24 VDC	
TRIP POINTS	1-10 Amps, Fixed	
AC INPUT CURRENT	Up to 50 Amps	
OUTPUT	SPDT, 10 Amps @ 240 VAC Resistive; 211 VA @ 120 VAC Inductive: 1/6 Horsepower @ 120 VAC or 1/3 Horsepower @ 240 VAC	
POWER CONSUMPTION	3 Watts (Approximately)	
RESPONSE TIME	Operate	30 mSEC
	Release	0.5 SEC
LIFE EXPECTANCY	Mechanical	10 Million Operations (Minimum)
	Electrical	100,000 Operations @ Rated Load
DUTY CYCLE	Continuous	
TEMPERATURE RATING	Operate	32° to 131°F (0° to +55°C)
	Storage	-49° to 185°F (-45° to +85°C)
SOCKETS	RB-08 or PF083A	
ENCLOSURE	Lexan Dust Cover; 8-Pin plug-in	
WEIGHT	6 oz	

Universal AC Current Monitor

SPECIFICATIONS

CONTROL VOLTAGE	24 or 120 VAC; 50/60 Hz, 24 VDC	
OUTPUT	DPDT, 10 Amp @ 120 VAC Resistive	
RESPONSE TIME	Operate	0.1 to 10 SEC Adjustable
	Release	0.3 to 30 SEC Adjustable
INDICATORS	Glows when relay is energized	
RESET	Automatic	
HYSTERESIS	5%	
TEMPERATURE RATING	Operate	32° to 131°F (0° to +55°C)
	Storage	-49° to 185°F (-45° to +85°C)
SOCKETS	RB-08 or PF083A	
ENCLOSURE	Lexan Dust Cover; 8-Pin plug-in	
WEIGHT	13 oz	

MODEL NUMBER

MODEL NUMBER	CMD			S	E	
CONTROL VOLTAGE						
24 Volts		24				
120 Volts		120				
TYPE OF CONTROL VOLTAGE						
AC			A			
DC			D			
CURRENT TRIP POINTS						
0.05 to 0.25 amp adj. max continuous 3.4 amps						.25
0.2 to 1 amp adj. max continuous 11.9 amps						1
1.0 to 5.0 amps adj. max continuous 13.4 amps						5
2.0 to 10 amps adj. max continuous 25 amps						10
4.0 to 20 amps adj. max continuous 25 amps						20

OPERATION

The **CMD Series** may be used as an **OVER CURRENT** Monitor or an **UNDER CURRENT** Monitor.

The CMD has adjustable Delay-on-Operate and adjustable Delay-on-Release time delays. When the current exceeds the preset current trip point for longer than the Delay-on-Operate time delay, the internal relay will energize (Pick-up). When the current drops below the preset current trip point for longer than the Delay-on-Release time delay, the internal relay will de-energize (Drop-out). When used as an over current monitor the Delay-on-Operate time delay is used to override inrush periods. When used as an under current monitor, the Delay-on-Release timer is used to override a temporary under current condition.

An External CT may be used to extend the range of the Current Monitor.

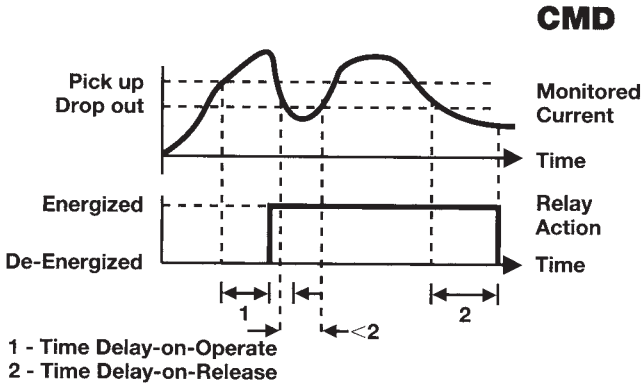

DIMENSIONS (INCHES)

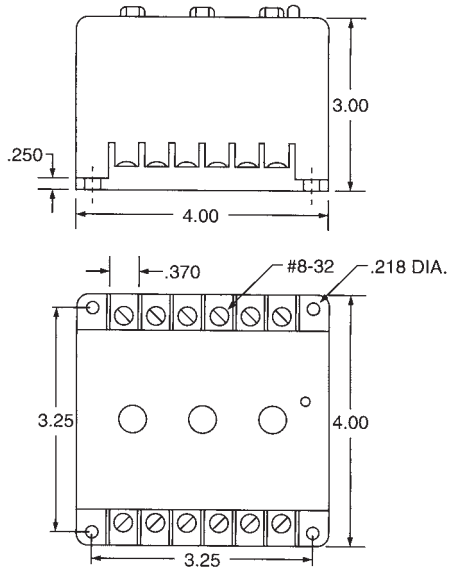

WIRING

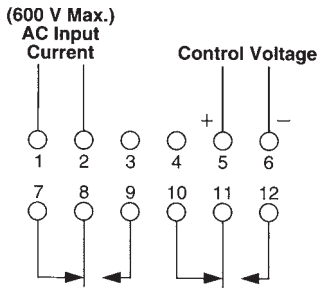

OPERATION

The **CMG Series** is a self powered Current Monitor/Relay that is used to detect the presence of AC current. When the monitored current exceeds the trip point for longer than 400 mSec., the internal relay energizes (Pick-up). When the monitored current drops below the trip point for longer than 50 mSec., the internal relay de-energizes (Drop-out). No physical connection is required as the line to be monitored is magnetically coupled by passing the conductor through the protruding Current Transformer of the monitor. No external supply is needed to power the monitor.

The current trip point specified is with one turn through the transformer. Each time the number of turns through the transformer doubles, the trip point effectively halves. Example: CMG-0100-20 will trip at 20 amps with one turn passing through the transformer. By placing two turns through the transformer, the relay will trip at 10 amps. Likewise, four turns will cause the relay to trip at 5 amps. (See below)

c UL® US
E55826

AC Self Powered Go/No-Go Current Monitor/Relays

- No physical connection to the AC line that is being monitored
- Magnetically coupled by passing supply line through protruding Current Transformer
- Withstands 400 Ampere-Turns Continuous
- No supply voltage required
- Will operate on 24, 120, 240 or 480 VAC lines
- 1/4" Quick Disconnect Terminals

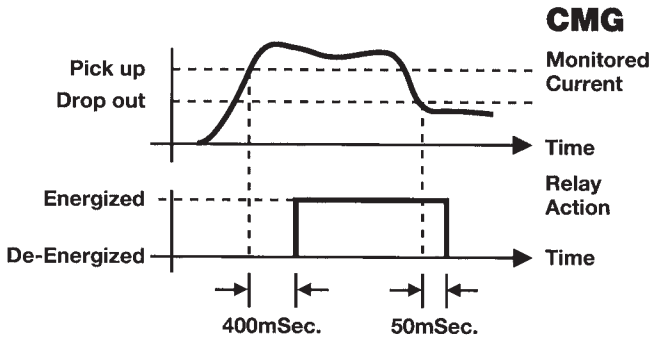

DIMENSIONS (INCHES)

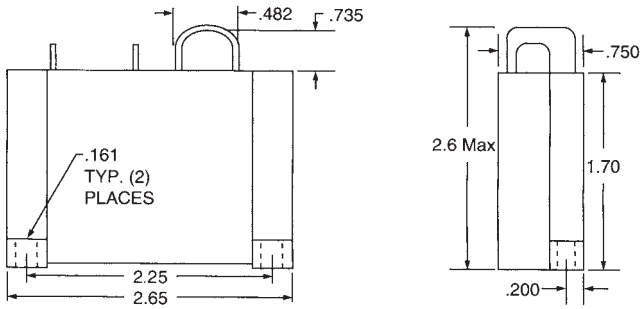

WIRING

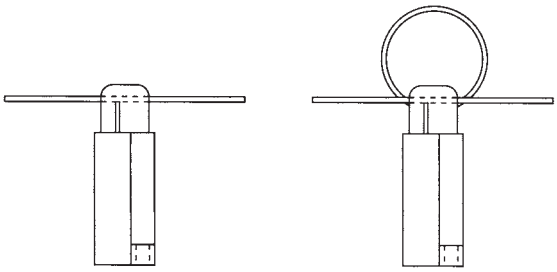

One Turn Through Transformer

Two Turns Through Transformer

SPECIFICATIONS

CONTROL VOLTAGE	Not Required	
TRIP POINTS	Pick-up	See Order Information
	Drop-out	25% below Pick-up
OUTPUT	SPST - N/O, 5 Amps @ 240 VAC, Res. (Available as a normally closed contact upon request #CMG-0200)	
HYSTERESIS	25%	
RESPONSE TIME	Operate	400mSec. (Approximately)
	Release	50mSec.
ACCURACY	±5% on Pick-up	
TERMINATIONS	(2) 1/4" Quick Disconnect Terminals	
RESET	Automatic	
TEMPERATURE RATING	Operate	32° to 131°F (0° to +55°C)
	Storage	-49° to 185°F (-45° to +85°C)
ENCLOSURE	Style "D" Surface Mounted	
WEIGHT	4 oz.	

MODEL NUMBER

MODEL NUMBER	CMG	0100	
CURRENT TRIP POINTS			
20 amps			20
24 amps			24
28 amps			28
32 amps			32
36 amps			36

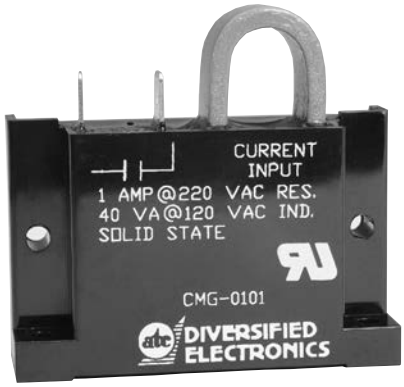

SOLID-STATE OUTPUT
SELF POWERED

c UL us
E55826

AC Go/No-Go Current Monitor

- No physical connection to the AC line that is being monitored
- Magnetically coupled by passing supply line through protruding Current Transformer
- No supply voltage required
- Will operate on 24, 120, 240 or 480 VAC lines
- Easy installation
- 1/4" Quick Disconnect Terminals

SPECIFICATIONS

CONTROL VOLTAGE	Not Required	
TRIP POINTS	Pick-up	2 Amps
	Drop-out	25% below Pick-up
OUTPUT	Solid State, SPST-N/O 1 Amp Resistive; 40 VA Run @ 120 VAC Inductive	
MAXIMUM CONTINUOUS CURRENT	200 Amp turns @ 25°C	
RESPONSE TIME	Operate	2-10 mSEC @ 130 Amps; 400 mSEC @ 10% over
	Release	400 mSEC (Approximately).
ABSOLUTE MAXIMUM OUTPUT VOLTAGE	280 VAC	
ACCURACY	20% on Pick-up	
TERMINATIONS	(2) 1/4" Quick Disconnect Terminals	
RESET	Automatic	
TEMPERATURE RATING	Operate	32° to 131°F (0° to +55°C)
	Storage	-49° to 185°F (-45° to +85°C)
ENCLOSURE	Style "D" Surface Mounted	
WEIGHT	4 oz.	

OPERATION

The **CMG-0101 Series** is a solid state self powered Current Monitor that is used to detect the presence of AC current. When the monitored current exceeds the trip point for longer than 400 mSec., the output energizes (Pick-up). When the monitored current drops below the trip point for longer than 400 mSec., the output de-energizes (Drop-out). No physical connection is required as the line to be monitored is magnetically coupled by passing the conductor through the protruding Current Transformer of the monitor. No external supply is needed to power the monitor.

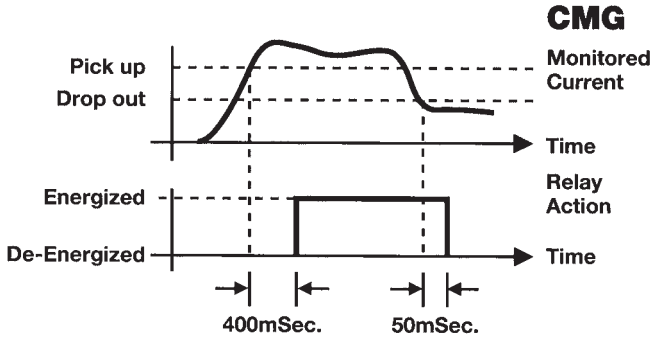

DIMENSIONS (INCHES)

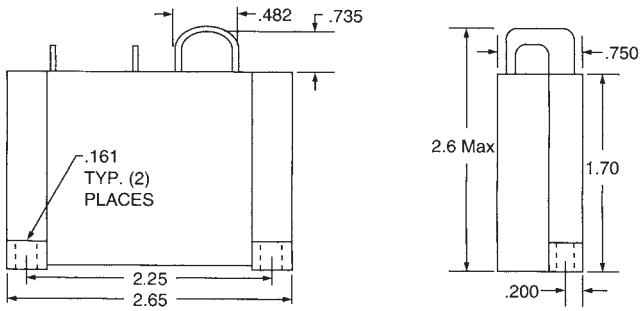

MODEL NUMBER	DESCRIPTION
CMG-0101	AC GO/NO-GO Current Mon

OPERATION

The **CMI Series** AC **OVER CURRENT** Monitor Relay operates in the **FAIL-SAFE MODEL** as the relay is energized (pick-up) when the monitored AC current is normal. The relay de-energizes (Drop-out) when the monitored current rises above the preset trip point or the control voltage is removed. When current is initially applied, a time delay begins. This inhibits the over current sensors while high inrush currents are present. The delay is field adjustable and is set so the delay period is slightly longer than the inrush time of the motor. If the monitored current is above the preset trip point when the delay elapses, the relay de-energizes. (Figure 1) If the current drops to the normal run current of the motor prior to the completion of the delay period, the relay remains energized until the current rises above the trip point, which indicates an abnormal condition. At that time the relay deenergizes and remains locked-out until the reset button is pressed or the control voltage is interrupted, and re-applied. (Figure 2) A typical application is for conveyor jam up detection.

An External CT may be used to extend the range of the Current Monitor.

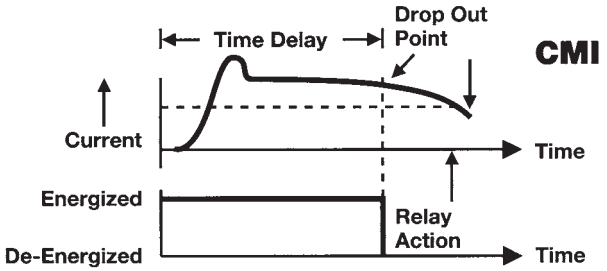

FIGURE 1

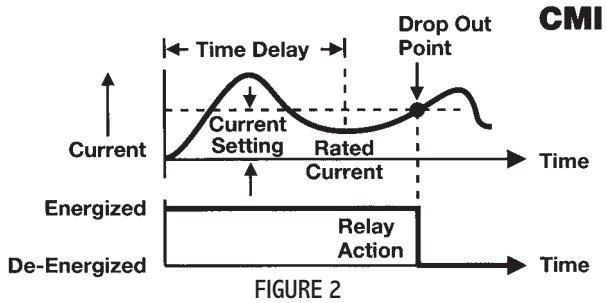

FIGURE 2

FAIL SAFE DETECTION OF MOTOR JAM UPS

AC Over Current Monitor

SPECIFICATIONS

CONTROL VOLTAGE	24 or 120 VAC, 50/60 Hz	
TRIP POINTS	Pick-up	See Order Information
	Drop-out	Press Reset Button or Restore Control Voltage
OUTPUT	DPDT, 10 Amps @ 120 VAC, Resistive	
TIME DELAY	0.2 to 10 SEC, Adjustable On Motor Starting	
OPERATING TIME	50 mSEC (After Initial Delay has Timed Out)	
CURRENT WITHSTAND	20 Times Nominal for 1 Second	
ISOLATION	2500 Volts Between Input and All Other Terminals	
INDICATOR	Glows on Normal Current	
RESET	Manual, Press Button or Interrupt Control Voltage	
RESET TIME	100 mSEC After Lock-Out	
TEMPERATURE RATING	Operate	32° to 131°F (0° to +55°C)
	Storage	-49° to 185°F (-45° to +85°C)
ENCLOSURE	Lexan Surface Mounted; #8-32 Screw Terminals	
WEIGHT	11 oz.	

DIMENSIONS (INCHES)

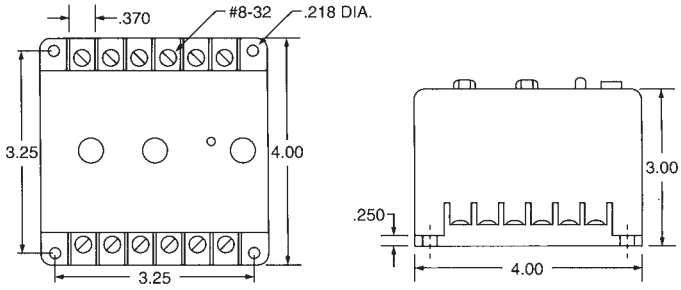

WIRING

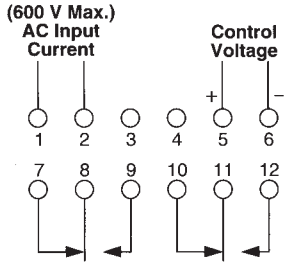

MODEL NUMBER

MODEL NUMBER	CMI		A	S	E	
CONTROL VOLTAGE						
24 Volts		24				
120 Volts		120				
CURRENT TRIP POINTS						
0.05 to 0.25 amp adj.						.25
0.2 to 1 amp adj.						1
1.0 to 5.0 amps adj.						5
2.0 to 10 amps adj.						10
4.0 to 20 amps adj.						20

INCLUDES MANUAL RESET

AC Over Current Monitor

SPECIFICATIONS

CONTROL VOLTAGE	24 or 120 VAC; 50/60 Hz	
TRIP POINTS	Pick-up	See order information
	Drop-out	5% below Pick-up (After Manual Reset)
OUTPUT	DPDT, 10 Amp @ 120 VAC Resistive	
HYSTERESIS	5%	
RESPONSE TIME	Operate	0.1 to 5 SEC, Adjustable
INDICATORS	LED Glows On Over Current (Style "E" Enclosure Only)	
RESET	Manual	
TEMPERATURE RATING	Operate	32° to 131°F (0° to +55°C)
	Storage	-49° to 185°F (-45° to +85°C)
ENCLOSURE	Style A	Lexan Dust Cover; 11-pin Plug-in
	Style E	Lexan Surface Mounted: #8-32 Screw Terminals
SOCKET	Style A: RB-11 Style E: 13 oz.	
WEIGHT	6 oz.	

MODEL NUMBER

MODEL NUMBER	CML		A	S		
CONTROL VOLTAGE						
24 Volts		24				
120 Volts		120				
TYPE OF CONTROL VOLTAGE						
AC			A			
ENCLOSURE STYLE						
Plug-In					A	
Surface Mount					E	
CURRENT TRIP POINTS						
0.05 to 0.25 amp adj.						.25
0.2 to 1 amp adj.						1
1.0 to 5.0 amps adj.						5
2.0 to 10 amps adj.						10
4.0 to 20 amps adj. (E Housing Only)						20

OPERATION

The **CML Series** is used to detect **OVER CURRENT** conditions. The internal relay energizes (Pick-up) when the monitored current exceeds the preset trip point for longer than the adjustable time delay period. The adjustable delay is incorporated to prevent nuisance tripping caused by motor inrush currents. The CML has the **MANUAL RESET** feature. The internal relay de-energizes (Drop-out) when the reset button is pressed. If the current is below the trip point when the button is released, the relay will remain de-energized. If the current is above the trip point, the relay will re-energize.

An External CT may be used to extend the range of the Current Monitor.

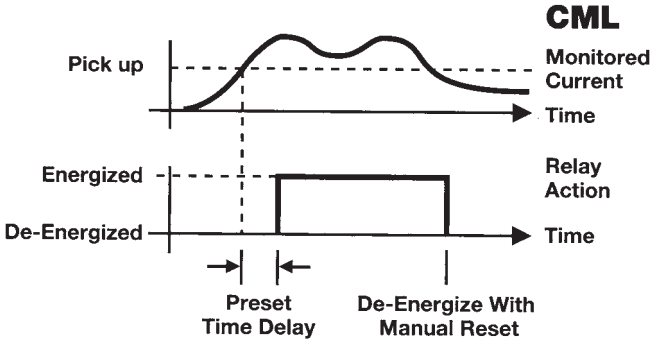

DIMENSIONS (INCHES)

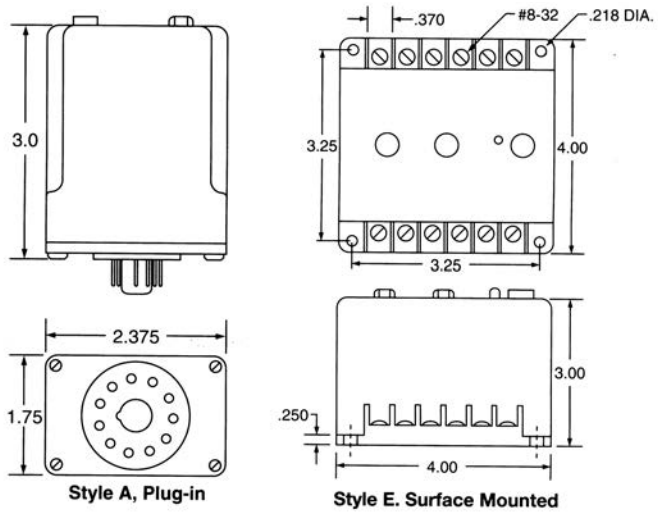

WIRING

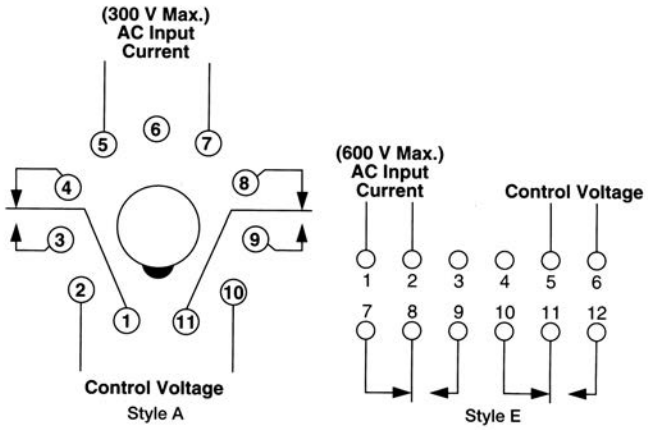

OPERATION

The **CMO Series** is used to detect **OVER CURRENT** conditions. The internal relay energizes (Pick-up) when the monitored current exceeds the preset trip point for longer than the adjustable time delay. The delay is incorporated to prevent nuisance tripping caused by motor inrush currents. The CMO has an automatic reset feature. The internal relay de-energizes (Dropout) when the current drops 5% below the preset trip for longer than 0.2 seconds.

An External CT may be used to extend the range of the Current.

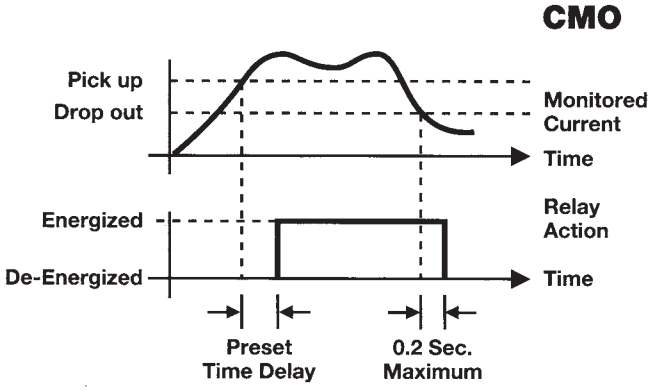

AC Over Current Monitor/Relays

SPECIFICATIONS

CONTROL VOLTAGE	24 or 120 VAC/DC; 50/60 Hz	
TRIP POINTS	Pick-up	See order information
	Drop-out	5% below Pick-up
OUTPUT	DPDT, 10 Amps @ 120 VAC, Resistive	
HYSTERESIS	5%	
RESPONSE TIME	Operate	0.1 to 5 SEC, Adjustable
	Release	0.2 SEC
INDICATOR	LED Glows On Over Current (Style "E" Enclosure Only)	
SOCKET	RB-11 Socket for Style A.	
RESET	Automatic	
TEMPERATURE RATING	Operate	32° to 131°F (0° to +55°C)
	Storage	-49° to 185°F (-45° to +85°C)
ENCLOSURE	Style A	Lexan Dust Cover; 11-pin Plug-in
	Style E	Lexan Surface Mounted: #8-32 Screw Terminals
WEIGHT	Style A: 5 oz. Style E: 13 oz.	

DIMENSIONS (INCHES)

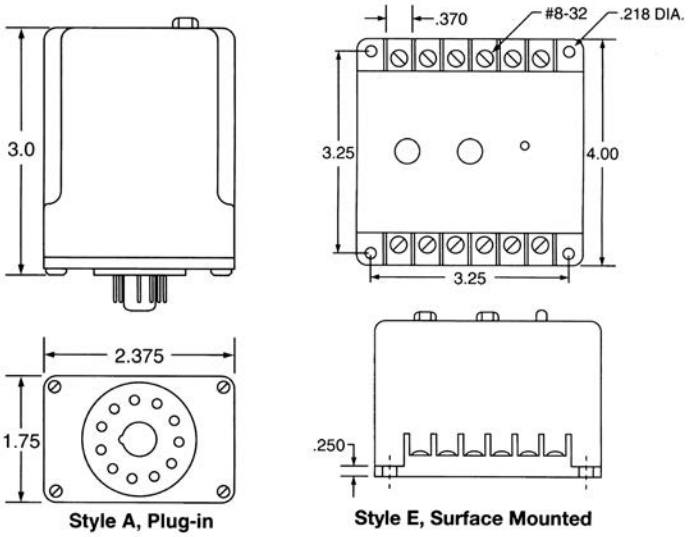

WIRING

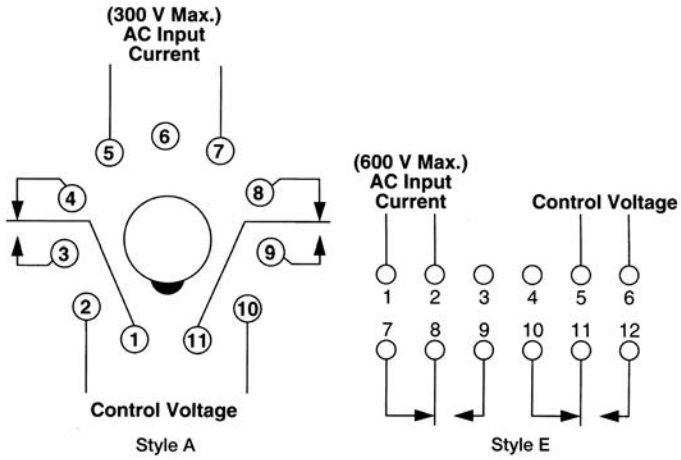

MODEL NUMBER

MODEL NUMBER	CMO	120	A	S		
CONTROL VOLTAGE						
24 or 120 VAC/DC; 50/60 Hz						
TYPE OF CONTROL VOLTAGE						
AC/DC						
ENCLOSURE STYLE						
Plug-In					A	
Surface Mount					E	
CURRENT TRIP POINTS						
0.05 to 0.25 amp adj.						.25
0.2 to 1 amp adj.						1
1.0 to 5.0 amps adj.						5
2.0 to 10 amps adj.						10
4.0 to 20 amps adj. (E Housing Only)						20

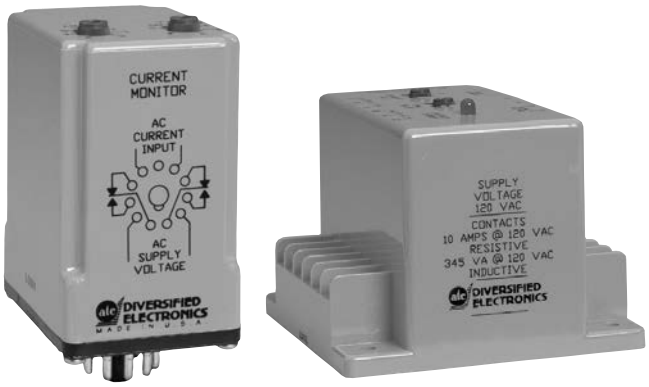

AC Under Current Monitor

SPECIFICATIONS

CONTROL VOLTAGE	24 or 120 VAC/DC; 50/60 Hz	
TRIP POINTS	Pick-up	5% above Drop-out
	Drop-out	See order information
OUTPUT	DPDT, 10 Amp @ 120 VAC Resistive	
HYSTERESIS	5%	
RESPONSE TIME	Operate	0.1 SEC
	Release	0.1 to 5 SEC, Adjustable
INDICATORS	Glows When Current is Above Preset Current Trip Point (Style E Enclosure Only)	
RESET	Automatic	
TEMPERATURE RATING	Operate	32° to 131°F (0° to +55°C)
	Storage	-49° to 185°F (-45° to +85°C)
ENCLOSURE	Style A	Lexan Dust Cover; 11-pin Plug-in
	Style E	Lexan Surface Mounted: #8-32 Screw Terminals
SOCKET	RB-11 Socket for Style A.	
WEIGHT	Style A 5 oz. Style E 10.5 oz.	

MODEL NUMBER

MODEL NUMBER	CMU	120	A	S		
CONTROL VOLTAGE 24 or 120 VAC/DC; 50/60 Hz						
TYPE OF CONTROL VOLTAGE AC/DC						
ENCLOSURE STYLE						
Plug-In					A	
Surface Mount					E	
CURRENT TRIP POINTS						
0.05 to 0.25 amp adj.						.25
0.2 to 1 amp adj.						1
1.0 to 5.0 amps adj.						5
2.0 to 10 amps adj.						10
4.0 to 20 amps adj. (E Housing Only)						20

OPERATION

The **CMU Series** is used to detect **UNDER CURRENT** conditions. The internal relay is energized (Pick-up) when the monitored current is above the preset trip point. The relay de-energizes (Drop-out) when the current falls below the trip point for longer than the adjustable delay. The delay is incorporated to prevent nuisance tripping caused by momentary line dips. The relay re-energizes when the current rises 5% above the Drop-out trip point for longer than 0.1 seconds. The relay has the automatic reset feature.

An external CT may be used to extend the range of the Current Monitor.

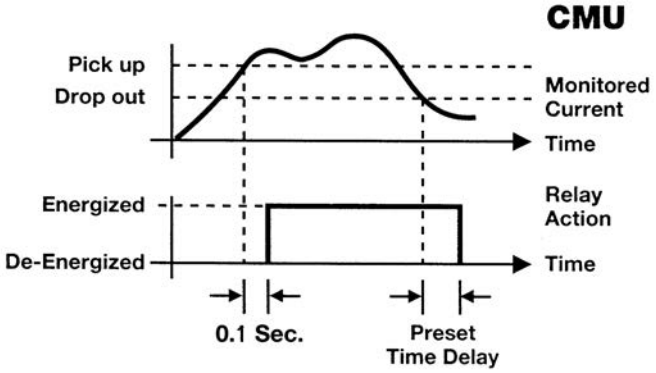

DIMENSIONS (INCHES)

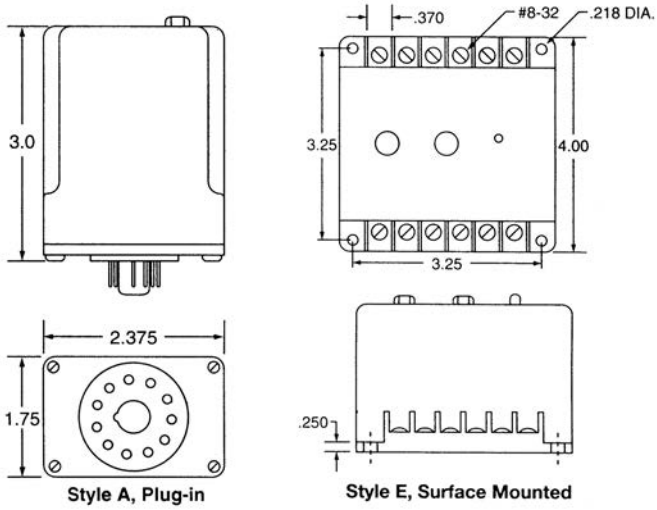

WIRING

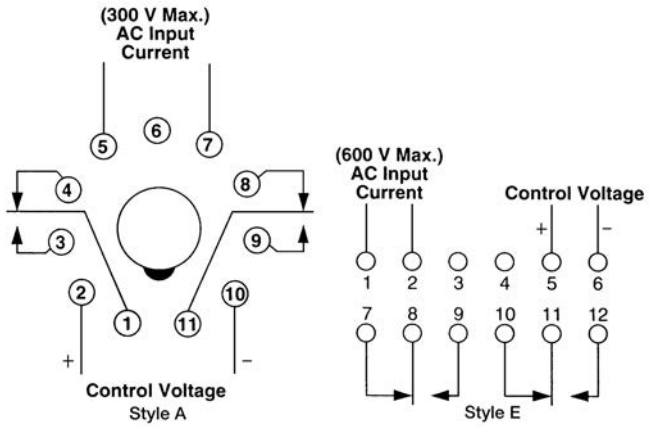

DIMENSIONS (MM)

CT-30/5, 50/5, 100/5, 200/5

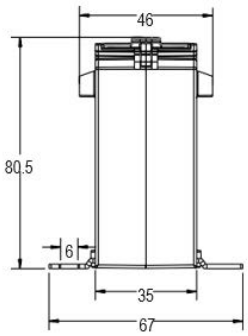

CT-30/5

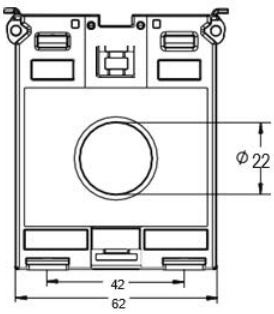

CT-50/5, 100/5

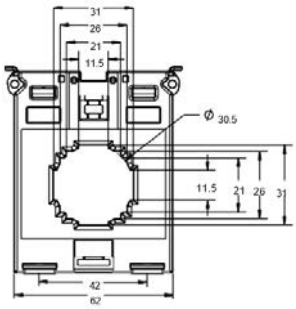

CT-200/5

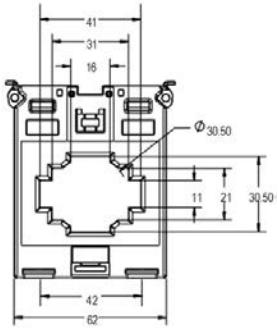

CT-500/5, 1000/5

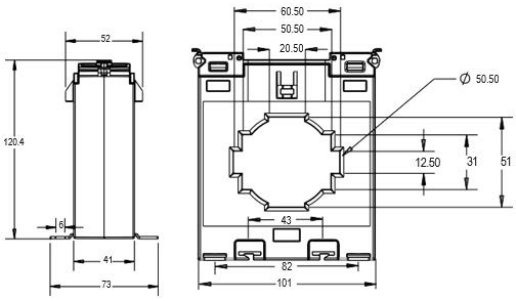

ORDERING INFORMATION

MODEL	CURRENT RATIO	BURDEN	ACCURACY CLASS
CT-30/5	30/5 A	1 VA	5
CT-50/5	50/5 A	1.5 VA	3
CT-100/5	100/5 A	3 VA	1
CT-200/5	200/5 A	2.5 VA	0.5
CT-500/5	500/5 A	5 VA	1
CT-1000/5	1000/5 A	15 VA	0.5

ACCESSORIES

DIN Rail Clamp — CTDRC

CTDRC - DIN Rail Clamp

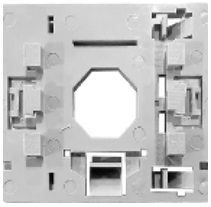

CE

c UL us LISTED
E531247

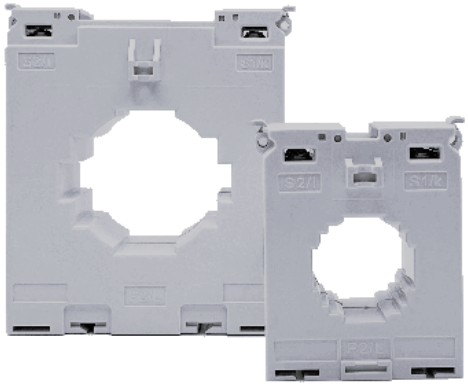

Current Transformers

The **CT Current Transformers** are available in a wide range of bus bar sizes and a current measuring range of 30A to 1000A. The transformers are CE and UL cURus listed.

- Use with different bus bar
- Accuracy: Class 0.5 to 5
- 30/5 to 1000/5 Amperes
- Panel Mount/ DIN Rail Mount (Optional Accessory)

SPECIFICATIONS

INPUT/OUTPUT	Rated primary rating	30A to 1000A
	Rated secondary output	5A
TECHNICAL SPECIFICATIONS	Rated burden (VA)	1VA to 15VA
	Class of accuracy	0.5 to 5
	Thermal Nominal Continuous	120% of In Rated Current (Icth)
	Thermal short circuit current (Ith)	Ith = 60 X In for 1 sec
	Instrument security factor	FS <5
	Insulation class	E (120°C max)
	Max operating voltage (Um)	720V maximum
	Isolation test voltage	3kV AC 1 min
	Nominal rated frequency	AC 50Hz - 60Hz
ENVIRONMENTAL SPECIFICATIONS	Ambient temperature	0°C to +50°C
	Humidity	< 95% RH (non condensing)
	Storage temperature	-5°C to +50°C
MOUNTING	Mounting modes	Panel Mount / DIN Rail Mount
STANDARD	Applicable standard	IEC 61869-2

THREE PHASE CURRENT UNBALANCE

Balanced or matched currents on a three phase system are difficult to maintain because of the many varying factors involved such as, unequal single phase loading, poor connections and cabling and/or dirty or burnt starter contacts.

Although these varying factors can be controlled to maintain as close as possible a balanced line, the unseen conditions such as overheated motor windings, burnt bearings, low voltage, high voltage and single phasing need to be constantly monitored to protect your valuable equipment.

The **CLB Series** Three Phase Current Unbalance and Over Current Monitor (page 176) offers this protection.

To determine the condition of your three phase line and to properly select the **CLB Series** percent unbalance setting a simple calculation formula is needed as follows:

$$\frac{(I\ max - I\ avg)}{I\ max} \times 100$$

Example:

1. Measure the current on each leg.

   Assume A = 10 amps

   B = 12 amps

   C = 9 amps

2. Find Average 10 + 12 + 9 = 31

   $$\frac{31}{3} = 10.33$$

   I max = 12

   I avg = 10.33

3. Apply formula 12 - 10.33 = 1.67

   $$\frac{1.67}{12} = .139 \times 100 = 13.9\%\ \text{unbalance}$$

EXTERNAL CURRENT TRANSFORMERS

The load or burden that can be connected to the secondary of the Current Transformer is usually specified in VA. The rated accuracy of the Current Transformer is guaranteed only when the sum of the VA ratings of all devices (ampmeters, wattmeters, current monitors, etc.) connected to the secondary windings does not exceed the specified VA rating.

The interconnecting conductor resistance must also be considered, especially when the Transformer is installed at some distance from the Current Monitor or other load.

For the wiring, the VA can be calculated using Ohm's Law:

$$VA = E \times I = (I \times R) \times I = I^2R$$

Where I = 5 Amps and R is the DC resistance of the wire.

All of the standard DE Current Transformers have a rating of 2 VA except the 2500/5 version which has a 5 VA rating.

From the above formula we can also calculate the maximum resistance that can be connected to the secondary of a Current Transformer:

$$VA = I^2R, \text{ Hence } R = \frac{VA}{I^2}$$

Example:

$$VA = 2 \quad R_{max} = \frac{VA}{I^2} = \frac{2}{(5)^2} = 0.08\ \text{Ohms} = 80\ \text{milliohms}$$

$$VA = 5 \quad R_{max} = \frac{VA}{I^2} = \frac{5}{(5)^2} = 0.2\ \text{Ohms} = 200\ \text{milliohms}$$

If the only load on the Current Transformer is a DE Current Monitor, its VA rating (approx. 0.15 VA) is small compared to the Current Transformer rating and can be neglected. This means that the resistance of the wiring can be 80 milliohms max. for the 2 VA units and 200 milliohms max for the 5 V A unit.

Gauge	Ohms per 1000'	Milliohms per foot
AWG 14	2.5	2.5
AWG 16	4.0	4.0
AWG 18	6.4	6.4
AWG 20	10.0	10.0

Example:

For a 2 VA Current Transformer, the length of AWG 16 wire would be:

$$\frac{80\ \text{milliohms}}{4.0\ \text{milliohms/ft}} = 20'$$

Because we are dealing with a pair of wires, the maximum distance from the Current Transformer to the Current Monitor can be only 10 ft.

As we can see, it is important to keep the wire length to minimum, use heavy wire, and keep all connections clean and tight.

ALTERNATING RELAYS

ATC-Diversified Electronics offers a wide variety of models for various staging requirements. The different models available are: **Duplexors, Triplexors, Quadraplexors, Special Function**, and **Expandable Alternating Relays**.

The **Alternating Relay** is used in multiple load installations to assure equal run time on all loads. They also allow for the addition of more capacity in the event of excess load requirements. The Alternating Relay provides equal run time on two or more loads by alternating the sequence in which the loads are allowed to start up. In each case, the alternating action is initiated each time the control switch across designated terminal opens. The control switch may be a float, a thermostat, a pressure switch, or a timer contact.

ALTERNATING CONTROLLERS

The **ARM Series**, **Alternating Controllers**, are used in multiple load installations to assure equal run time on all loads. They also allow for the addition of more capacity in the event of excess load requirements. The Alternating Controllers provide equal run time on two or more loads by alternating the sequence in which the loads are allowed to start up.

All **ARM** models feature **intrinsically safe inputs** and logic that allows the outputs to operate even if one of the inputs fails to open or close. For example: if the off switch fails to close, the lead load will not energize until both the lead and the lag switches close. An inrush delay on all models reduces line sags by preventing multiple loads from energizing simultaneously.

FEATURE MATRIX

Model Number	NUMBER OF LOADS SEQUENCED			ENCLOSURE STYLE		EXPANDABLE	EXTERNAL CLOCKING	AUTOMATIC ALTERNATING	FIELD SELECTABLE SEQUENCING	UL/CANADIAN UL RECOGNIZED	UL LISTED	CSA CERTIFIED
	2	3	4	A	E							
ARA-XXX-ABA	●			●				●		●		●
ARA-XXX-ACA	●			●				●		●		●
ARA-XXX-ADA	●			●				●		●		●
ARA-XXX-AEA	●			●				●		●		●
ARA-XXX-AFE		●			●		●	●			●	●
ARA-XXX-AGE			●		●		●	●			●	●
ARA-120-AHE		●			●		●	●				
ARA-120-AJE		●			●		●	●	●			
ARA-120-AME	●	●			●	●	●	●				
ARA-120-ANE		●	●		●	●	●	●				
ARB-XXX-ABA	●			●				●	●	●		●
ARB-XXX-ACA	●			●				●	●	●		●
ARB-XXX-ADA	●			●				●	●	●		●
ARB-XXX-AEA	●			●				●	●	●		●
ARC-XXX-AAA	●			●				●		●		
ARD-XXX-AAA	●			●				●	●	●		
AUC-XXX-AAA	●			●				●			●	
AUD-XXX-AAA	●			●				●	●		●	

FEATURE MATRIX

Model Number	NUMBER OF LOADS SEQUENCED			STYLE SURFACE MOUNT	PANEL MOUNT	AUTOMATIC ALTERNATING	SELECTABLE SEQUENCING	OUTPUT LOGIC (SOSO)	OUTPUT LOGIC (FOSO)	OMIT	LEAD SELECT	UL LISTED 913
	2	3	4									
ARM-XXX-AAE		●		●		●		●				●
ARM-XXX-AAEP		●		●	●	●		●				●
ARM-XXX-ABE		●		●		●			●			●
ARM-XXX-ABEP		●		●	●	●			●			●
ARM-XXX-ACE		●		●		●	●	●		●	●	●
ARM-XXX-ACEP		●		●	●	●	●	●		●	●	●
ARM-XXX-ADE		●		●		●	●		●	●	●	●
ARM-XXX-ADEP		●		●	●	●	●		●	●	●	●
ARM-XXX-AFE	●			●		●	●	●	●		●	●
ARM-XXX-AFEP	●			●	●	●	●	●	●		●	●
ARM-XXX-AGE			●	●		●		●				●
ARM-XXX-AGEP			●	●	●	●		●				●
ARM-XXX-AHE			●	●		●			●			●
ARM-XXX-AHEP			●	●	●	●			●			●

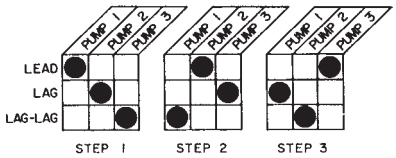

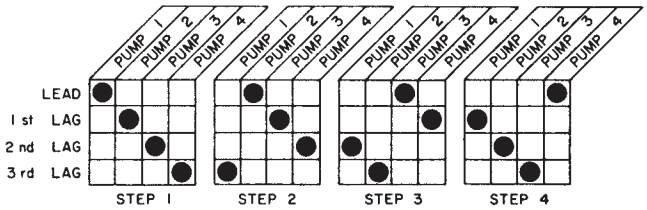

E55826

Duplexor

The **Duplexor** is used in control panels where **two loads** are required to alternate to provide equal run time on the loads. The alternating action is initiated by a control switch, which is common with one side of the control voltage. The output contacts will change states each time the control switch is opened, thus alternating the two loads. The LED indicators show the position of the output relay.

The **ARA Series** is the standard **Duplexor** providing automatic alternating sequence. The **ARB** has the automatic sequencing feature plus the option of locking it into one sequence. A three position switch permits the field selection of normal duplexing action, locking in the A-B sequence, or B-A sequence.

SPECIFICATIONS

CONTROL VOLTAGE	24, 120 VAC/DC, 208, 240, 50/60Hz,	
CONTROL SWITCH CURRENT	1 mA	
POWER REQUIRED	3 VA (Approximately)	
DUTY CYCLE	Continuous	
LIFE EXPECTANCY	Mechanical	10,000,000 Operations (Minimum)
	Electrical	100,000 Operations @ Rated Load
INDICATORS	LED Shows Output Position	
TEMPERATURES RATING	Operate	-4° to 131°F (-20° to +55°C)
	Storage	-40° to 185°F (-40° to +85°C)
CONTACT RATING	10 Amps @ 240 VAC, Resistive 1/8 hp @ 120 VAC 1/4 hp @ 240 VAC Inductive, 360 VA @ 240 VAC, Inductive	
ENCLOSURE	"A" Lexan® Dust Cover	
TERMINATIONS	Industrial Plug-in	
WEIGHT	4.5 oz.	

DIMENSIONS (INCHES)

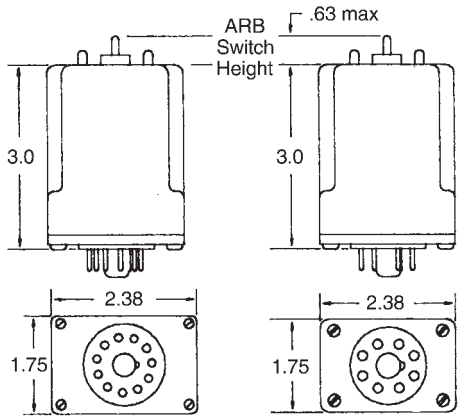

WIRING

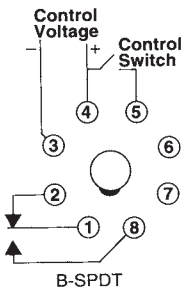

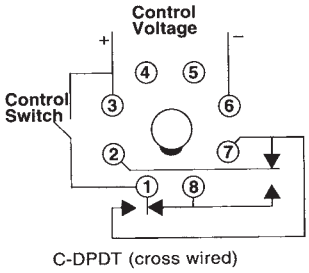

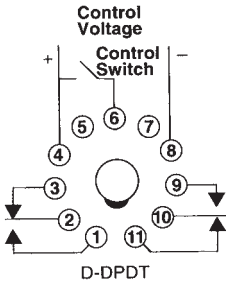

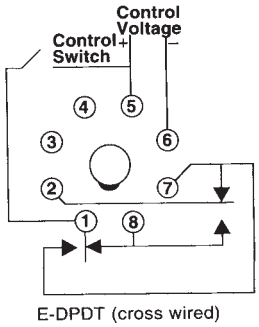

MODEL NUMBER

MODEL NUMBER	AR			A		A
TYPE OF ALTERNATING RELAY						
Standard Duplexor		A				
Special Function Duplexor		B				
CONTROL VOLTAGE						
24 VAC/DC			24			
120 VAC/DC			120			
208 VAC			208			
240 VAC			240			
TYPE OF VOLTAGE						
VAC or VAC/DC				A		
CONTACT CONFIGURATION						
SPDT					B	
DPDT (Cross Wired)					C	
DPDT					D	
DPDT (Cross Wired)					E	
ENCLOSURE STYLE						A

The **ARC/ARD Series** is a duplexor that detects input of float switch inputs and determines outputs to turn on with line voltage. As the lag and lead switches open, the loads remain energized. When all switches open both loads de-energize simultaneously and the lead load alternates. The ARD series has a 3 position selector switch to lock it into normal duplexing action, 1-2 sequence or 2-1 sequence.

Sequence On-Simultaneous Off (SOSO)

c UL us
E55826

Duplexor

SPECIFICATIONS

CONTROL VOLTAGE	120 VAC +10/-20 %	
POWER REQUIRED	Less than 3 VAC	
DUTY CYCLE	Continuous	
LIFE EXPECTANCY	Mechanical	10,000,000 Operations (Minimum)
	Electrical	100,000 Operations @ Rated Load
INDICATORS	LED Shows Output Position	
TEMPERATURES RATING	Operate	32 to 149°F (0 to 65°C)
	Storage	-40° to 185°F (-40° to +85°C)
CONTACT RATING	5 Amps Resistive @ 120 VAC (Single Output) 1/6 hp @ 120 VAC (Single Output) 10 Amps Res. @ 120 VAC (Combined Output) 1/3 hp @ 120 VAC (Combined Output)	
ENCLOSURE	"A" Lexan® Dust Cover	
TERMINATIONS	Industrial Plug-in	
WEIGHT	6.4 oz.	

DIMENSIONS (INCHES)

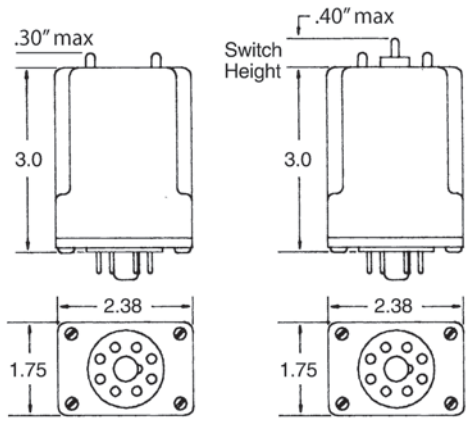

MODEL NUMBER

MODEL NUMBER	A					A	
UL STATUS							
UL Recognized		R					
UL Listed (OT08 socket)		U					
TYPE OF ALTERNATING RELAY							
Standard Duplexor			C				
Special Function Duplexor			D				
CONTROL VOLTAGE							
120 VAC				120			
TYPE OF VOLTAGE							
VAC					A		
CONTACT CONFIGURATION							
SPDT Two Line Voltage Outputs (Crosswired)						A	
ENCLOSURE STYLE							A

ORDER
AUC120AAU and AUD120AAU which includes socket OT08 as UL listed Unit

WIRING

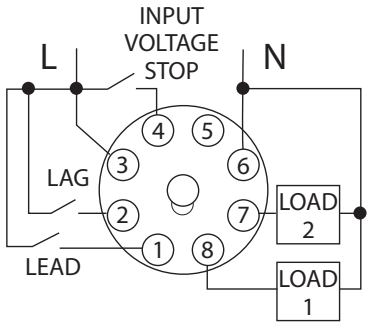

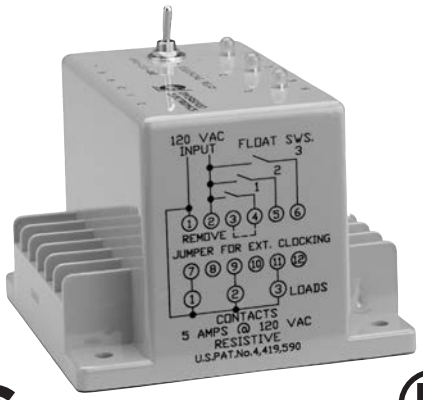

C UL US
LISTED
IND. CONT. EQ.
496Y

Triplexor

SPECIFICATIONS

CONTROL VOLTAGE	24, 120 VAC ±10%, 50/60 Hz	
CONTROL SWITCH CURRENT	2 mA	
POWER REQUIRED	3 VA (Approximately)	
DUTY CYCLE	Continuous	
OUTPUT RATING	Triplexor	24V 5A Resistive, 25 VA @ 24VAC -120V (3) 5 Amp Resistive, 1/6 hp, 211 VA @ 120 VAC, Inductive Externally Switched to Terminal #2
	Quadraplexor	(4) 5 Amp Resistive, 1/6 hp, 211 VA @ 120 VAC, Inductive Externally Switched to terminal #2
LIFE EXPECTANCY	Mechanical	10,000,000 Operations (Minimum)
	Electrical	100,000 Operations @ Rated Load
INDICATORS	LED's Show Condition of Outputs	
TEMPERATURES RATING	Operate	-4° to 131°F (-20° to +55°C)
	Storage	-40° to 185°F (-40° to +85°C)
ENCLOSURE	Style "E" Lexan® Surface Mounted	
TERMINATIONS	(12) #8-32 Screw Terminals	
WEIGHT	12 to 14 oz.	

NOTE: For Analog signal inputs, ATC offers a duplexing pump control the ATC-Digitec 3800 Panel Meter.

MODEL NUMBER

MODEL NUMBER	ARA		A		E
CONTROL VOLTAGE					
24 V Triplexor		24			
120 V Triplexor		120			
120 V Quadraplexor		120			
Triplexor				F	
Quadraplexor (120 V only)				G	

The ARA Series Triplexor and Quadraplexor are UL Listed under UL File Number E55826.

The **Triplexor and Quadraplexor Alternating Relays** are designed for use in **MULTIPLE LOAD** installations that are required to alternate in sequence while assuring equal run time on all loads. They also allow for additional loads to run in the event of excess load requirements.

The **Triplexor and Quadraplexor** have the option of automatic alterations or external clocking alterations. When the factory installed jumper is in place the alternating action is initiated by a control switch, which is common with one side of the control voltage. When the jumper is removed the alternating action is initiated by an isolated normally open switch.

ARA-XXX-AFE ALTERNATING ACTION

TRIPLEXOR: For automatic alterations a factory-installed jumper is in place between terminals 3 and 4. The alternating action is accomplished when the control switch between terminals 2 and 4 opens.

For external clocking alterations, remove the factory-installed jumper between terminals 3 and 4 and place an isolated normally open switch between terminals 2 and 3. The alternating action will occur each time this isolated switch is closed and then re-opened.

ARA-XXX-AGE

QUADRAPLEXOR: For automatic alterations, a factory installed jumper is in place between terminals 11 and 12. The alternating action is accomplished when the control switch between terminals 2 and 3 opens.

For external clocking alterations, remove the factory-installed jumper between terminals 11 and 12 and place an isolated normally open switch between terminals 2 and 12. The alternating action will occur each time this isolated switch is closed and then re-opened.

In the event of a power failure the Alternating Relays will return to their quiescent state and continue sequencing loads on one-at-a-time.

DIMENSIONS (INCHES)

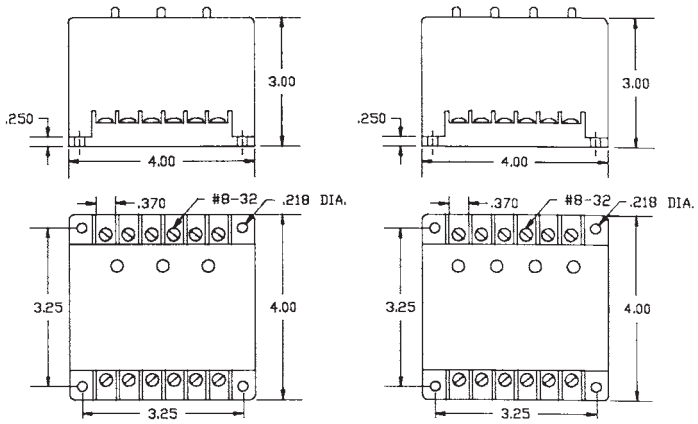

WIRING

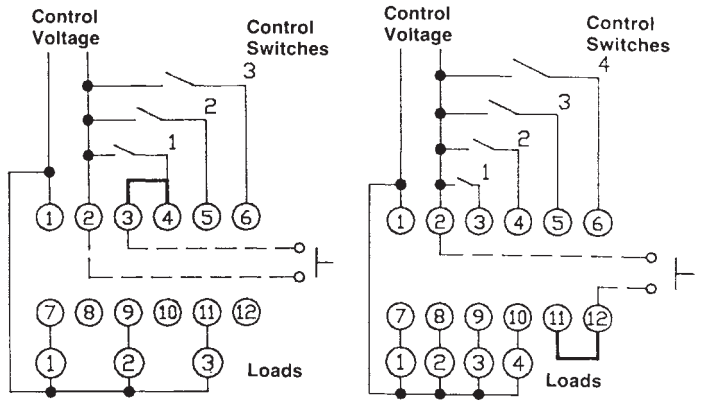

The **Expandable Alternating Relays** are designed for use in multiple load installations that are required to alternate in sequence and have the ability to accept an additional load installation in the future.

ARA-120-AME: The ARA-120-AME is a **Duplexor/Triplexor Alternating Relay**. With the selector switch in position A, this alternating relay will duplex the loads on terminals 7 and 9. With the switch in position B, the Alternating Relay will triplex the three loads on terminals 7, 9 and 11.

For automatic alterations, a factory-installed jumper is in place between terminals 3 and 4. The alternating action is accomplished when the control switch between terminals 2 and 4 opens.

For external clocking alterations, remove the factory installed jumper between terminals 3 and 4 and place an isolated normally open switch between terminals 2 and 3. The alternating action will occur each time this isolated switch is closed and then re-opened.

ARA-120-ANE: The ARA-120-ANE is a **Triplexor/Quadraplexor Alternating Relay**. With the selector switch in position A, the Alternating Relay will triplex between the loads on terminals 7, 8 and 9. With the switch in position B, the Alternating relay will quadraplex the loads on terminals 7, 8, 9 and 10.

For automatic alterations, a factory installed jumper is in place between terminals 11 and 12. The alternating action is accomplished when the control switch between terminals 2 and 3 opens. For external clocking alterations, remove the factory installed jumper between terminals 11 and 12 and place an isolated normally open switch between terminals 2 and 12. The alternating action will occur each time this isolated switch is closed and then re-opened.

In the event of a power failure the Alternating Relays will return to their quiescent state and continue sequencing loads on one-at-a-time.

SPECIFICATIONS

CONTROL VOLTAGE	120 VAC ±10%, 50/60 Hz	
CONTROL SWITCH CURRENT	2 mA	
POWER REQUIRED	3 VA (Approximately)	
DUTY CYCLE	Continuous	
OUTPUT RATING	Triplexor	(3) 5 Amp Resistive, 1/6 hp, 211 VA @ 120 VAC, Inductive Externally Switched to terminal #2
	Quadraplexor	(4) 5 Amp Resistive, 1/6 hp, 211 VA @ 120 VAC, Inductive Externally Switched to terminal #2
LIFE EXPECTANCY	Mechanical	10,000,000 Operations (Minimum)
	Electrical	100,000 Operations @ Rated Load
INDICATORS	LED's Show Condition of Outputs	
TEMPERATURES RATING	Operate	-4° to 131°F (-20° to +55°C)
	Storage	-40° to 185°F (-40° to +85°C)
ENCLOSURE	Style "E" Lexan® Surface Mounted	
TERMINATIONS	(12) #8-32 Screw Terminals	
WEIGHT	12.5 to 14 oz.	

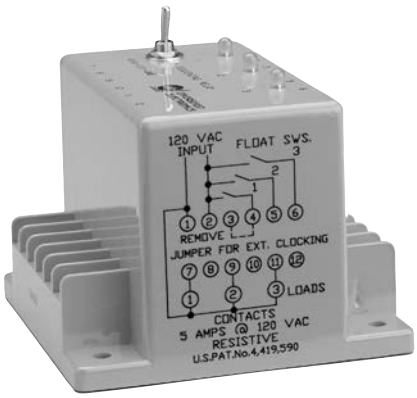

Expandable Alternating Relays

ORDERING INFORMATION

MODEL NUMBER	DESCRIPTION
ARA-120-AME	Duplexor/Triplexor
ARA-120-ANE	Triplexor/Quadraplexor

DIMENSIONS (INCHES)

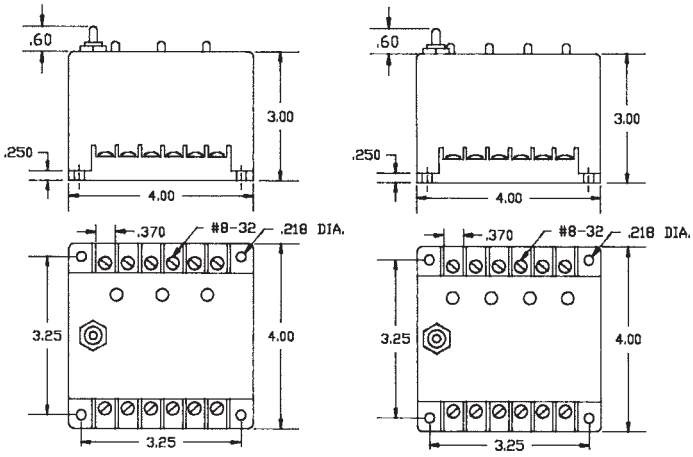

WIRING

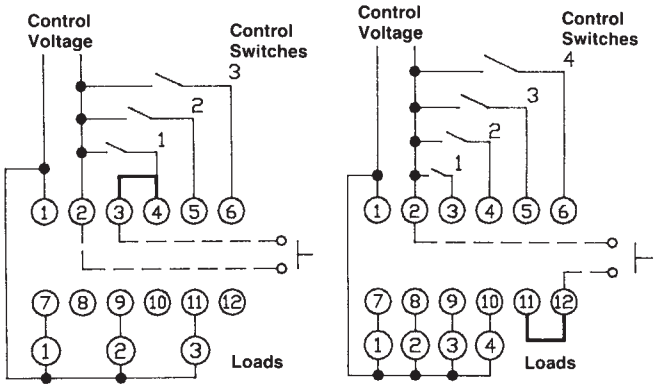

INCLUDES "LOAD OMIT" SWITCH

Special Function Alternating Relay

ORDERING INFORMATION

MODEL NUMBER	DESCRIPTION
ARA-120-AHE	Special Function Alternating Relay

DIMENSIONS (INCHES)

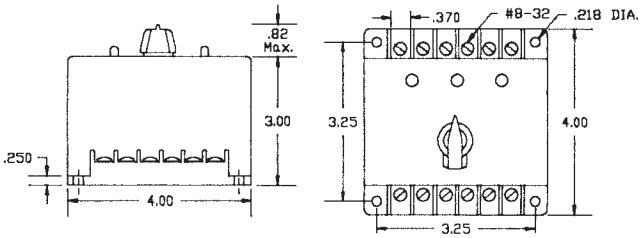

WIRING

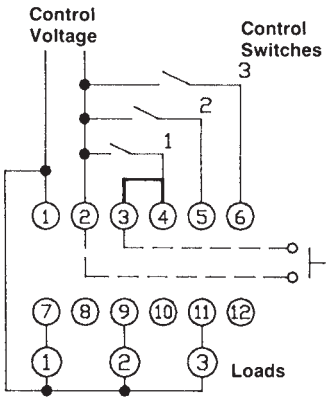

OPERATION

The **ARA-120-AHE** is a special function **TRIPLEXOR** designed for three load installations. This model has a field selection switch that is used to omit one of the three loads for general or emergency maintenance while duplexing the remaining two loads. The ARA-120-AHE has the option of alternating on each load cycle or by external clocking. This alternating relay also allows for additional loads to run in the event of excess load requirements.

The alternating action is initiated by the control switch between terminals 2 and 4 when the factory installed jumper is in place between terminals 3 and 4.

The alternating action may be initiated externally by removing the factory installed jumper between terminals 3 and 4 and placing an isolated normally open switch between terminals 2 and 3. An alternating action will occur each time this isolated switch is closed and then re-opened.

The selection switch has the following positions:

Normal — Normal operation as Triplexor

Omit 1 — Omit load #1 Duplex loads 2 and 3

Omit 2 — Omit load #2 Duplex loads 1 and 3

Omit 3 — Omit load #3 Duplex loads 1 and 2

In the event of a power failure, the Alternating Relay will return to its quiescent state and continue sequencing loads on one-at-a-time.

NOTE: When the "omit load" option is selected, full potential will appear on the output terminal of the omitted load when the lag switch between terminals 2 and 5 closes. It is recommended that the H-O-A switch be placed in the "off" position for the omitted load.

SPECIFICATIONS

CONTROL VOLTAGE	120 VAC ±10%, 50/60 Hz	
CONTROL SWITCH CURRENT	2 mA	
POWER REQUIRED	3 VA (Approximately)	
DUTY CYCLE	Continuous	
OUTPUT RATING	Triplexor	(3) 5 Amp Resistive, 1/6 hp, 211 VA @ 120 VAC, Inductive Externally Switched to terminal #2
LIFE EXPECTANCY	Mechanical	10,000,000 Operations (Minimum)
	Electrical	100,000 Operations @ Rated Load
INDICATORS	LED's Show Condition of Outputs	
TEMPERATURES RATING	Operate	-4° to 131°F (-20° to +55°C)
	Storage	-40° to 185°F (-40° to +85°C)
ENCLOSURE	Style "E" Lexan® Surface Mounted	
TERMINATIONS	(12) #8-32 Screw Terminals	
WEIGHT	16 oz.	

OPERATION

The **ARA-120-AJE** is a special function **TRIPLEXOR** designed for three load installations. This model has a field selection switch that is used to lock the Alternating Relay into a desired sequence. The ARA-120-AJE has the option of automatically alternating on each load cycle or by external clocking. This Alternating Relay also allows for additional loads to run in the event of excess load requirements.

The alternating action is initiated by the control switch between terminals 2 and 4 when the factory installed jumper is in place between terminals 3 and 4. The alternating action may be initiated externally by removing the factory installed jumper between terminals 3 and 4 and placing an isolated normally open switch between terminals 2 and 3. The alternating action will occur each time this isolated switch is closed and then re-opened.

A four position **ROTARY SWITCH** has been incorporated to permit field selection of the sequence that is to be maintained. The selection switch has the following positions:

Normal — Normal operation as a Triplexor

Lock 1 — Locks in sequence 1-2-3; No alternation will occur while in this position.

Lock 2 — Locks in sequence 2-3-1; No alternation will occur while in this position.

Lock 3 — Locks in sequence 3-1-2; No alternation will occur while in this position.

In the event of a power failure, the alternating relay will return to its quiescent state and continue sequencing loads on one-at-a-time.

SPECIFICATIONS

CONTROL VOLTAGE	120 VAC ±10%, 50/60 Hz	
CONTROL SWITCH CURRENT	2 mA	
POWER REQUIRED	3 VA (Approximately)	
DUTY CYCLE	Continuous	
OUTPUT RATING	Triplexor	(3) 5 Amp Resistive, 1/6 hp, 211 VA @ 120 VAC, Inductive Externally Switched to terminal #2
LIFE EXPECTANCY	Mechanical	10,000,000 Operations (Minimum)
	Electrical	100,000 Operations @ Rated Load
INDICATORS	LED's Show Condition of Outputs	
TEMPERATURES RATING	Operate	-4° to 131°F (-20° to +55°C)
	Storage	-40° to 185°F (-40° to +85°C)
ENCLOSURE	Style "E" Lexan® Surface Mounted	
TERMINATIONS	(12) #8-32 Screw Terminals	
WEIGHT	17 oz.	

INCLUDES SEQUENCE LOCKING SWITCH

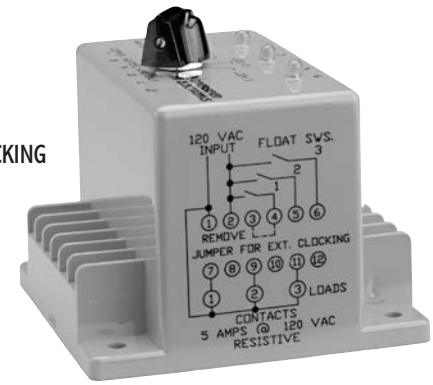

Triplexor Alternating Relay

ORDERING INFORMATION

MODEL NUMBER	DESCRIPTION
ARA-120-AJE	Alternating Relay

DIMENSIONS (INCHES)

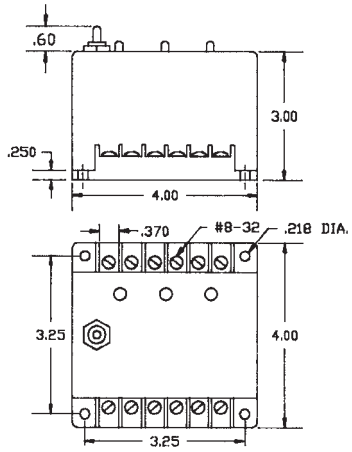

WIRING

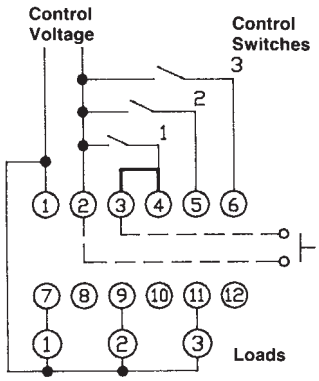

Process Control Equipment for Hazardous Locations 7M26 UL913

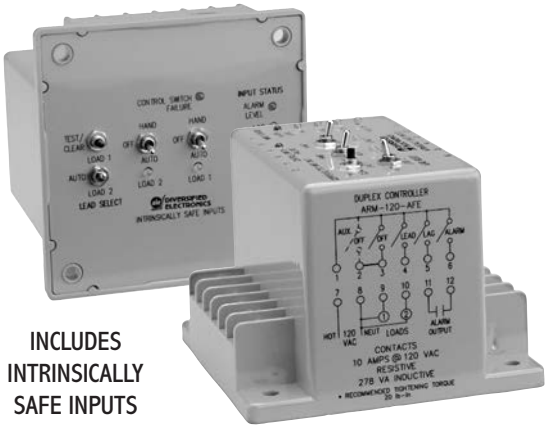

INCLUDES INTRINSICALLY SAFE INPUTS

Integrated Duplex Controller SOSO Operation (Sequence-on, Simultaneous-off)

The **ARM Series** Alternating Relay is a **microprocessor-based controller** designed for use in dual load installations to assure equal run time on each load. LED indicators show the status of the unit's five intrinsically safe control switch inputs, one alarm, and two load outputs. H-O-A switches, a lead select switch, and a test/clear button are provided for manual control. The ARM Series reduces the number of components required for this application by combining many functions into one unit.

TWO PUMP SEQUENCING: Evenly distributes run time by automatically alternating lead and lag load designations when the off control switch input opens.

UL913 INTRINSICALLY SAFE: Control switch inputs are low voltage/low current and are electronically isolated from the control voltage and load alarm contacts.

H-O-A Switches: Hand-Off-Automatic switches allow for manual operation.

LEAD SELECT SWITCH: Disables the automatic sequencing function and allows loads to be locked into the 2-1 or 1-2 sequence.

CONTROL SWITCH FAULT DETECTION: Unit detects open and shorted control switch failures.

TEST/CLEAR SWITCH: Verifies function and resets the control switch fault detection algorithm.

ALARM OUTPUT: Alarm contacts close when a control switch fails or the system's capacity is exceeded.

INRUSH CURRENT DELAY: Reduces line sags by preventing both loads from energizing simultaneously.

VERSATILE MOUNTING: Two (2) mounting configurations are available. The standard surface mount has top access to controls and indicators and is intended for back panel mounting. The panel mount option is intended for front panel or door cutout access to controls and indicators.

SPECIFICATIONS

CONTROL VOLTAGE	24 or 120 VAC ±10%, 50/60 Hz			
CONTROL SWITCH	Open Circuit Voltage	5 VDC		
	Short Circuit Voltage	0.1mA		
POWER REQUIRED	4 VA Maximum			
DUTY CYCLE	Continuous			
RESPONSE	Power Up	3 SEC. ±5%		
	Inrush Current	5 SEC. ±5%		
CONTACT RATING	(3) SPST-N.O. 10 Amp Resistive, 1/4 hp, 55 VA Inductive @ 24 VAC, 278 VA Inductive @ 120 VAC			
LED INDICATORS	Designation	Color	State	Condition
	Level/Alarm	Red	ON	cs5 Closed
	Lag	Green	ON	cs4 Closed
	Lead	Green	ON	cs3 Closed
	Off	Green	ON	cs2 Closed
	Aux. Off	Green	ON	cs1 Aux./cs2 Closed
	Load 1	Green	ON	Load ON
	Load 2	Green	ON	Load ON
	Ctrl. Switch	Red	ON	Failure Open/Closed
LIFE EXPECTANCY	Mechanical	10 Million Operations		
	Electrical	50,000 @ Rated Load		
TEMPERATURE RATING	Operate	-4° to 131°F (-20° to +55°C)		
	Storage	-40° to 185°F (-40° to +85°C)		
TERMINATIONS	(12) #8-32 Screw Terminals			

WEIGHT 16 oz.

ORDERING INFORMATION

MODEL NUMBER	CONTROL VOLTAGE	MOUNTING	COMMENTS
ARM-XXX-AFE*	24 or 120 VAC	Surface	Standard
ARM-XXX-AFEP*	24 or 120 VAC	Panel	Standard
ARM-2003	120 VAC	Surface	Special: w/o H-O-A switches
ARM-2010	120 VAC	Panel	Special: w/o H-O-A switches
ARM-2011	120 VAC	Surface	Special: w/o Control switch failure feature

*Replace XXX with desire control voltage (24, 120)

The ARM Series is UL Listed under UL File Number E151578.

DIMENSIONS (INCHES)

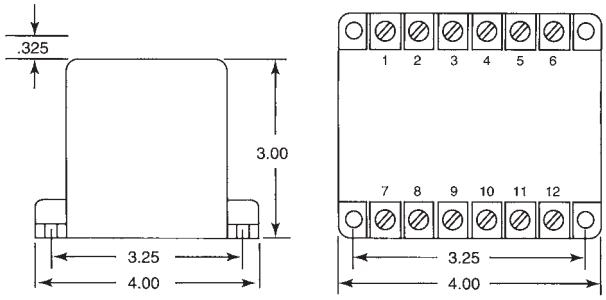

*Panel Mount Cutout

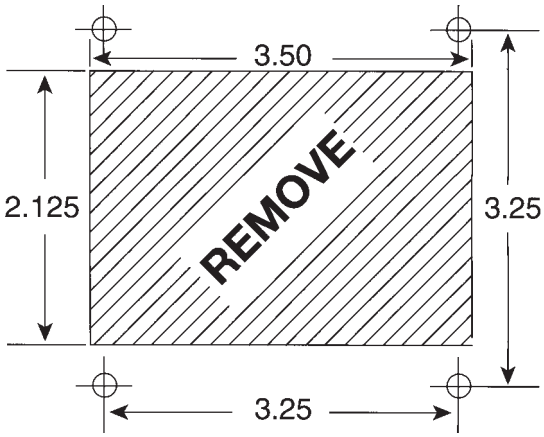

*Greenlee punch #60071 or equivalent

OPERATION

FOUR CONTROL SWITCHING: Do not remove factory-installed jumper between terminals 2 and 3. The control switches connected to terminals 3 through 6 are labeled OFF (CS2), LEAD (CS3), LAG (CS4) and ALARM (CS5). Under normal operation the lead load energizes when the off and lead control switches close in order. The lag load energizes when the lag closes and the alarm load energizes when the alarm switch closes. When all four switches reopen in the proper order all outputs are de-energized and the lead/lag output designations reverse.

FIVE CONTROL SWITCHING: Remove factory installed jumper between terminals 2 and 3. After the jumper has been removed, the additional control switch is connected to terminal 2. The extra switch functions as an AUXILIARY OFF (CS1) switch. It is used to prevent loads from running continuously if the primary OFF (CS2) switch fails to open properly.

FAULT DETECTION ALGORITHM: If any of the control switches open or close out of order, the alarm output energizes and a fault detection algorithm is used to identify the faulty switch. The faulty switch is then ignored and the OFF, LEAD, and LAG control switch designations are altered to maintain safe operation.

WIRING

CONTROL DRAWING 190

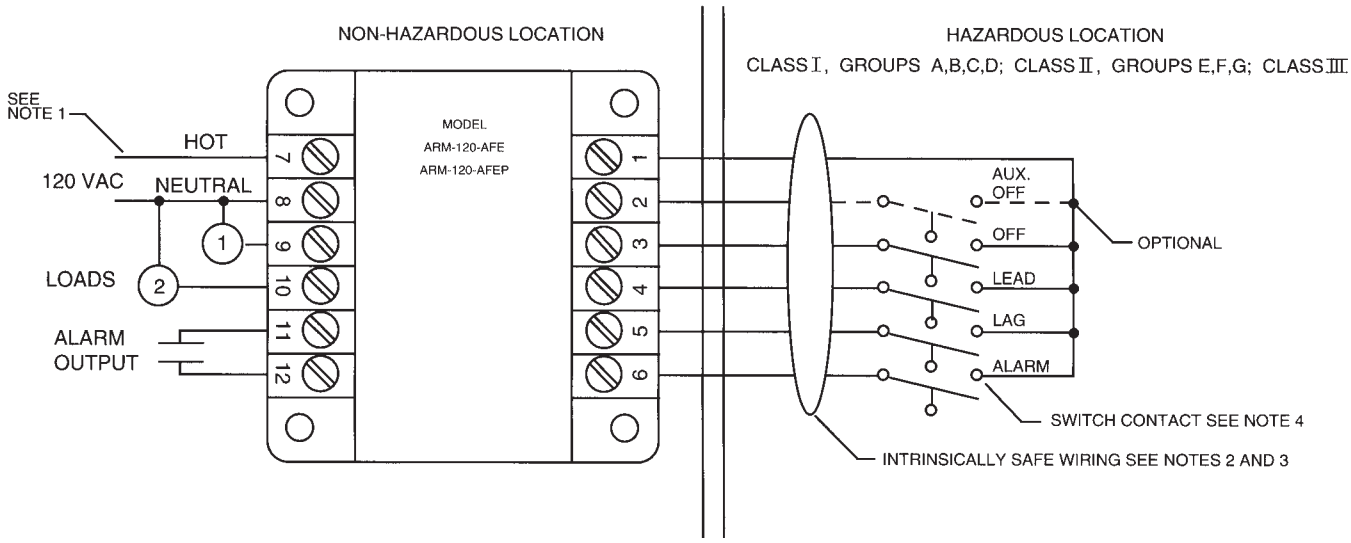

1. To maintain intrinsic safety, connect the Controller's Earth Ground Terminal 8 to the earth ground of the AC Power Supply feeder. The resistance between the Controller's Earth Ground Terminal and Earth Ground shall be less than 1 ohm.
2. Maximum distance between Controller and switch contact is 1000 feet.
3. All intrinsically safe wiring shall be separated from non-intrinsically safe wiring. Refer to article 504 of the National Electrical Code ANSI/NFPA 70 on procedures for intrinsically safe wiring.
4. Switch contact shall be any non-energy storing or generating mechanical switch type device containing no capacitance or inductance.
5. Connections to terminals 5, 6, 9, 10, 11, and 12 are optional. If the Aux. Off switch is omitted, terminals 2 & 3 must be jumpered.

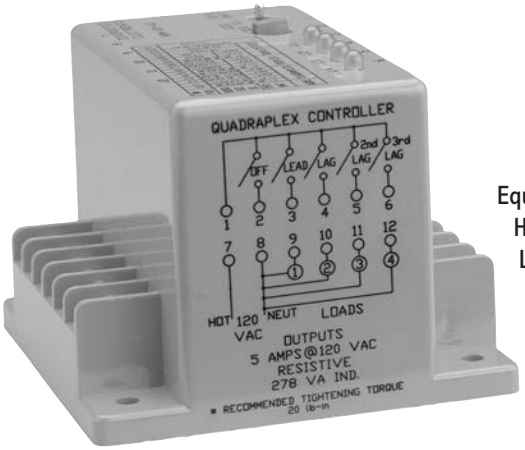

Process Control Equipment for Hazardous Locations 7M26 UL913

These **TRIPLEX** and **QUADRAPLEX CONTROLLERS** are available with either Sequence-On-Simultaneous-Off **(SOSO)** or First-On-First-Off **(FOFO)** output logic. The special function models are differentiated by a rotary switch that allows any output to be locked as the lead load or any one load to be omitted while sequencing only the remaining loads. In addition to load omission and lead selection, the expandable model can be set for 2, 3, or 4 load operation with either SOSO or FOFO logic.

All models feature **INTRINSICALLY SAFE INPUTS** and logic that allows the outputs to operate properly even if one of the inputs fails to open or close. For example: if the off switch fails to close, the lead load will not energize until both the lead and the lag switches close. An inrush delay on all models reduces line sags by preventing multiple loads from energizing simultaneously.

Alternating Controllers

- 3 and 4 Load Output Models
- Intrinsically Safe Inputs

SPECIFICATIONS

CONTROL VOLTAGE	24 or 120 VAC ±10%, 50/60 Hz	
SWITCH VOLTAGE	5.1 Volts open circuit	
SWITCH CURRENT	10 µAmps short circuit	
POWER REQUIRED	2.5 VA	
SENSITIVITY	100 k ohm	
ISOLATION	2500V Input to Output	
DUTY CYCLE	Continuous	
RESPONSE	Power Up	< 1 SEC
	Operate	< 25 mSEC (switch closure)
	Inrush	5 SEC
	Release	< 150 mSEC
CONTACT RATING	All channels, SPST-N.O., 5 Amps per channel @ 24 or 120 VAC, Resistive; 278 VA, Inductive	
LED INDICATORS	ON when corresponding output is ON	
LIFE EXPECTANCY	Mechanical	20 Million Operations
	Electrical	50,000 Operations
TEMPERATURE RATING	Operate	-4° to 131°F (-20° to +55°C)
	Storage	-40° to 185°F (-40° to +85°C)
TERMINATIONS	(12) #8-32 Screw terminals with pressure clamps	
ENCLOSURE	Style "E" Surface mount	
WEIGHT	16 oz.	

DIMENSIONS (INCHES)

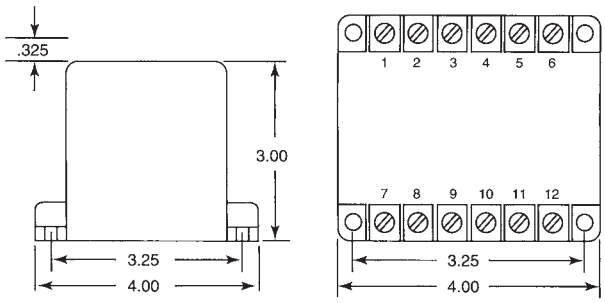

MODEL NUMBER

MODEL NUMBER			ARM			E	
CONTROL VOLTAGE							
24 VAC				24A			
120 VAC				120A			
NO. OF LOADS	**OUTPUT LOGIC**	**SPECIAL FUNCTIONS**					
3	SOSO	none			A		
3	FOFO	none			B		
3	SOSO	Omit/Lead Select			C		
3	FOFO	Omit/Lead Select			D		
4	SOSO	none			G		
4	FOFO	none			H		
ENCLOSURE STYLE						E	
MOUNT							
No Suffix Surface Mount							
P Suffix Panel Mount							P

The ARM Series is UL Listed under UL File Number E151578.

The **ARM-120-AAE** and **ARM-120-ABE** Triplex Controllers have four switch inputs and three load outputs. The inputs are designated off, lead, lag and 2nd lag. If the off switch fails to close, the lead load will not energize until both the lead and lag switches close. De-energization of the loads depends on the output logic of the selected controller.

ARM-120-AAE (SOSO): The **ARM-120-AAE** has sequence-on simultaneous off output logic. As the 2nd lag, lag and lead switches open, the loads remain energized. When the off switch opens, all three loads de-energize simultaneously. If any switch fails to open, the loads still de-energize when the off switch opens. The lead advances one position each time the loads de-energize.

ARM-120-ABE (FOFO): The **ARM-120-ABE** has first-on-first-off output logic. When the 2nd lag switch opens, all three loads remain energized. The lag switch opens next, and the lead load de-energizes. When the lead switch opens, the lag load de-energizes. Finally, the off switch opens, and the second lag load de-energizes. At the end of each cycle the lead advances one position for each load energized during the cycle. For example: if loads one and two cycle on and off, the lead will advance two positions. Load three will be the lead load for the next cycle.

The **ARM-120-ACE (SOSO)** and **ARM-120-ADE (FOFO)** Special Function Triplex Controllers have the same features and operations as the ARM-120-AAE and ARM-120-ABE respectively with the addition of an eight-position field selection switch. The switch allows any one load to be omitted from the sequence or locked in the lead position. An automatic test mode is also provided for system verification and troubleshooting.

LOAD OMIT MODE: One load may be omitted from the sequence for general or emergency maintenance while alternating the remaining loads.

LEAD SELECT MODE: The controller may be locked into a desired sequence to equalize motor run time.

AUTOMATIC TEST MODE: The controller energizes the loads one at a time for five second intervals.

OPERATION TRIPLEX CONTROLLERS

Intrinsically safe equipment and wiring is equipment and wiring which is incapable of releasing sufficient electrical or thermal energy under normal or abnormal conditions to cause ignition of a specific hazardous atmospheric mixture in its most ignitable concentration. Intrinsically safe terminations and wiring may be brought into any hazardous location of any group classification for which it is accepted without requiring explosion-proof housing or other means of protection.

Hazardous locations are classified by the National Electrical Code according to the level of hazard that may exist in the area. A hazardous location is designated by its class, group and division. The class and group specify the specific hazardous substances that may exist in the classified location.

- Class I, Groups A through D – Flammable gasses
- Class II, Groups E through G – Combustible dusts
- Class III, Easily ignitable fibers or flyings

  The division indicates the conditions under which the hazardous substance may be present.

- Division I–Hazardous substances exist continuously or intermittently under normal operating conditions.
- Division II – Hazardous substances exist within closed containers or systems from which they can escape only in case of accidental rupture or breakdown.

WIRING

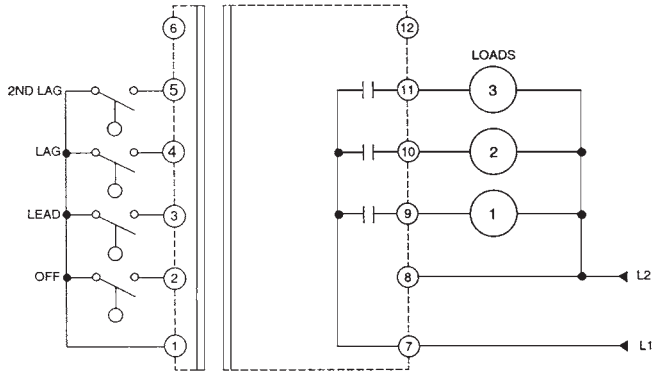

FIELD SELECTION SWITCH

POS.	FUNCTION
0	NORMAL
1	1 2 3
2	2 3 1
3	3 1 2
4	OMIT L1
5	OMIT L2
6	OMIT L3
7	TEST

OPERATION QUADRAPLEX CONTROLLERS

The **ARM-120-AGE** and **ARM-120-AHE Quadraplex Controllers** have five switch inputs and four load outputs. The inputs are designated off, lead, lag, 2nd lag, and 3rd lag. With the off switch closed, the loads energize in sequence upon closure of the lead, lag, 2nd lag, and 3rd lag inputs. If the off switch fails to close, the lead load will not energize until both the lead and lag switches close. De-energization of the loads depends on the output logic of the selected controller.

ARM-120-AGE (SOSO): The **ARM-120-AGE** has sequence-on simultaneous off output logic. As the 3rd lag, 2nd lag, lag and lead switches open, the loads remain energized. When the off switch opens, all four loads de-energize simultaneously. If any switch fails to open, the loads still de-energize when the off switch opens. The lead advances one position each time the loads de-energize.

ARM-120-AHE (FOFO): The **ARM-120-AHE** has first-on-first-off output logic. When the 3rd lag switch opens, all four loads remain energized. The 2nd lag switch opens next, and the lead load de-energizes. When the lag switch opens, the lag load de-energizes. Next, the lead switch opens, and the 2nd lag load de-energizes. Finally, the off switch opens, and the 3rd lag load de-energizes. At the end of each cycle the lead advances one position for each load energized during the cycle. For example: if loads one and two cycle on and off, the lead will advance two positions. Load three will be the lead load for the next cycle.

WIRING

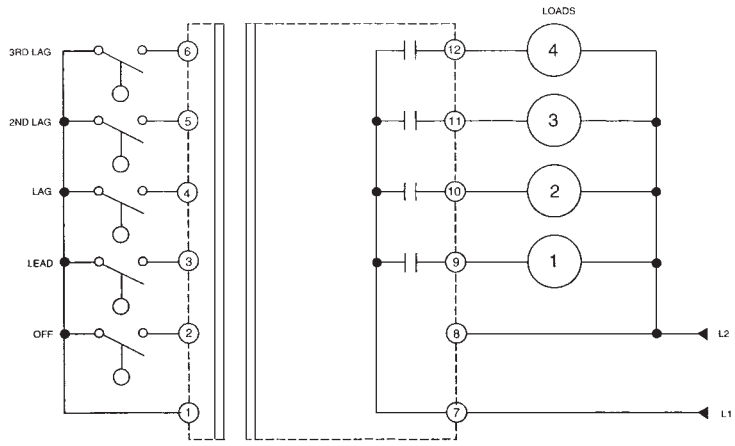

FOFO OPERATION

STEP 1

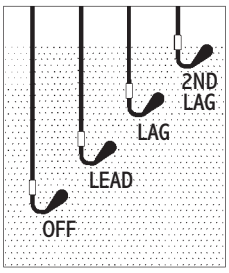

This example continues from SOSO operation step four. With all float switches closed, all loads are energized.

STEP 2

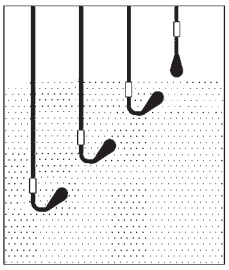

As the fluid level falls, the 2nd lag switch opens. All loads remain energized. Each float switch in descending order acts as the OFF switch for the preceding float.

STEP 3

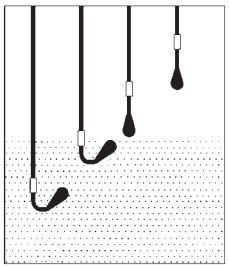

When the lag switch opens, load 1 de-energizes. Loads 2 and 3 remain energized.

STEP 4

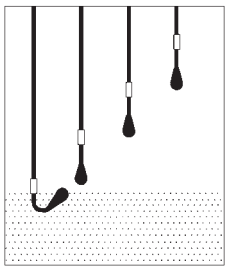

When the lead switch opens, load 2 de-energizes. Load 3 is held on by the OFF switch.

STEP 5

When the OFF switch opens, load 3 de-energizes and the lead advances three positions. At the end of each cycle the lead advances one position for each load energized during the cycle. This particular example reverts back to SOSO OPERATION 1-4 wherein load 1 would again be the lead load.

SOSO OPERATION

STEP 1

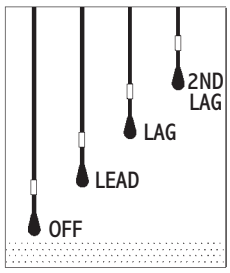

This example illustrates the normal operation of the Triplex Controller in a pump down application with four normally open dry float switches. The switches are designated off, lead, lag, and 2nd lag. The example begins with all switches open and all loads de-energized.

STEP 2

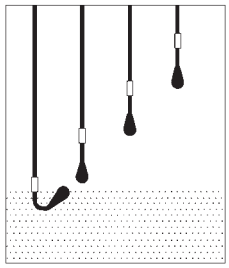

As the fluid level rises, the OFF switch closes, no loads are energized.

STEP 3

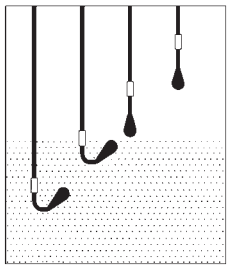

If the fluid level continues to rise, the lead switch closes and load 1 energizes.

STEP 4

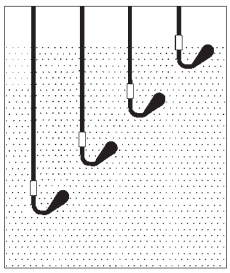

As the fluid level continues to rise each successive float switch closure sequentially energizes a corresponding load.

STEP 5

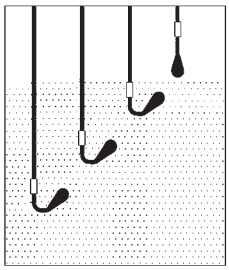

When the fluid level falls and each float switch opens, the loads remain energized so long as the OFF switch remains closed. No external auxiliary contacts are required to accomplish this latch feature.

STEP 6

When the fluid level falls below the OFF switch, all loads simultaneously de-energize, and the alternating logic advances one position. The next rise and fall in fluid level and successive operation of load switches will result in the SOSO load operation as follows: 2-3-1, 3-1-2, and back to 1-2-3 as in Step 1.

ISOLATED SWITCHES

INTRINSICALLY SAFE SINGLE & MULTIPLE CHANNEL INPUTS

Hazardous locations are classified by the National Electrical Code according to the level of hazard that may exist in the area. A hazardous location is designated by its class, group and division.

Class and group specify the type of hazardous substance that may exist in the classified location. The division indicates the conditions under which the hazardous substance may be present.

CLASS I
Locations in which flammable gases or vapors may be present in the air in quantities sufficient to produce explosive or ignitable mixtures.

GROUP A
Atmospheres containing acetylene.

GROUP B
Atmospheres containing hydrogen, gases or vapors of equivalent hazard, such as manufactured gas.

GROUP C
Atmospheres containing ethyl-ether vapors, ethylene or cyclopropane.

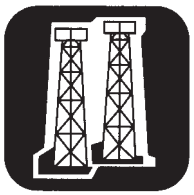

GROUP D
Atmospheres containing gasoline, hexane, naphtha, benzine, butane, propane, alcohol, acetone, benzol, lacquer solvent vapors or natural gas.

DIVISION I
Locations in which hazardous concentrations in the air exist continuously, intermittently or periodically under normal operating conditions.

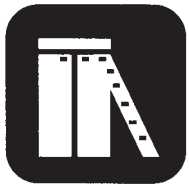

CLASS II
Locations which are hazardous because of the presence of combustible dust.

GROUP E
Atmospheres containing metal dust including aluminum, magnesium and their commercial alloys and other metals of similarly hazardous characteristics.

GROUP F
Atmospheres containing carbon black, coal or coke dust.

GROUP G
Atmospheres containing flour, starch or grain dusts.

CLASS III
Locations which are hazardous because of the presence of easily ignitable fibers or flyings, but in which such fibers or flyings are not likely to be in suspension in air in quantities sufficient to product ignitable mixtures.

DIVISION II
Locations in which hazardous concentrations are handled, processed or used but are normally confined within closed containers or closed systems from which they can escape only in case of accidental rupture or breakdown.

Process Control Equipment for Hazardous Locations
7M26
UL913

The ATC Diversified Electronics series of Isolated Switches have been tested and approved for listing under Underwriters Laboratories (UL) UL913 Intrinsically Safe Apparatus and Associated Apparatus. The input(s) to these switches have been approved for use in all classes, groups and divisions of hazardous locations.

OPERATION

The **ISO Series single channel** devices are used to provide a safe and reliable means of controlling loads from hazardous locations without releasing sufficient energy, under normal or abnormal conditions, to cause ignition of a flammable or combustible atmospheric mixture while in its most easily ignited concentration. An isolated output turns on when the control switch input from the hazardous location is closed. When the control switch input opens, the isolated output turns off. The Style A single channel plug-in devices come equipped with integral spring mating clips and socket (PF083A) which secure the device to make this unit the only UL913 Intrinsically Safe plug-in associated apparatus available on the market today. The Style N, surface mounted enclosure is sealed with a high quality epoxy resin material and has five (5) #8-32 screw terminals.

Process Control Equipment
for Hazardous Locations
7M26
UL913

Single Channel Isolated Switch

DIMENSIONS (INCHES)

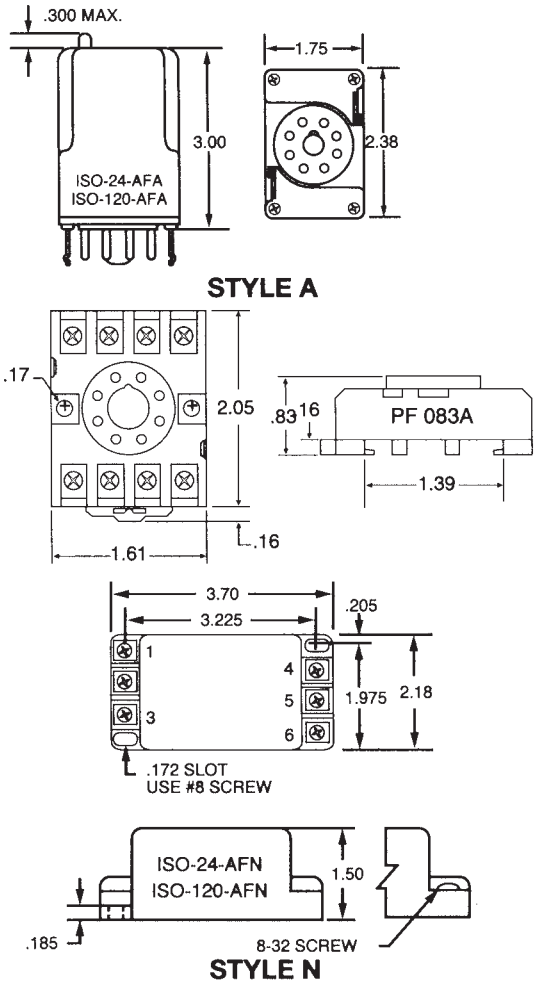

SPECIFICATIONS

CONTROL VOLTAGE	24 or 120 VAC ±10%, 50/60 Hz	
CONTROL SWITCH	Open Circuit Voltage	16 VDC
	Short Circuit Current	200 µAmps
RESPONSE	Operate	6 mSEC (Approx.)
	Release	2.5 mSEC (Approx.)
POWER REQUIRED	1.5 VA	
DUTY CYCLE	Continuous	
CONTACT RATING	SPST-N.O., 5 amps @ 24 or 120 VAC, Resistive; 278 VA, Inductive	
SENSITIVITY	100 k ohm	
ISOLATION	2500 Volts, Input to Output	
LIFE EXPECTANCY	Mechanical	20 Million Operations
	Electrical	50,000 Operations @ Rated Load
INDICATORS	On When Output is On	
TEMPERATURE RATING	Operate	-4° to 131°F (-20° to +55°C)
	Storage	-40° to 185°F (-40° to +85°C)
ENCLOSURE	Style "A" and "N"	
TERMINATIONS	(12) #8-32 Screw terminals	
WEIGHT	20 oz.	

ORDERING INFORMATION

MODEL NUMBER	CONTROL VOLTAGE	ENCLOSURE STYLE
ISO-24-AFA	24 VAC	A
ISO-120-AFA	120 VAC	A
ISO-24-AFN	24 VAC	N
ISO-120-AFN	120 VAC	N

Style "A" Socket Included (PF083A) with clips

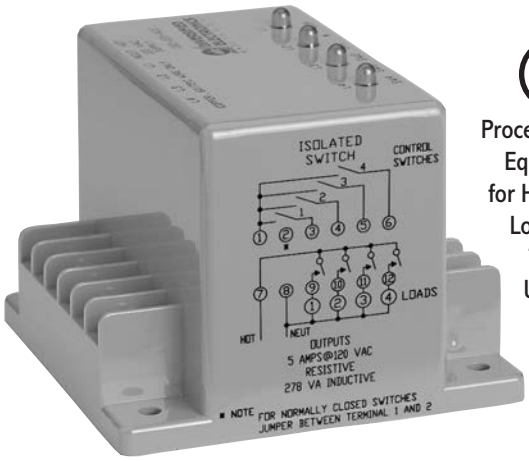

Process Control Equipment for Hazardous Locations 7M26 UL913

Multiple Channel Isolated Switch

OPERATION

The **ISO/ISL Series multiple channel** devices are used to provide a safe and reliable means of controlling loads from hazardous locations without releasing sufficient energy under normal or abnormal conditions to cause ignition of a flammable or combustible atmospheric mixture while in its most easily ignited concentration. An isolated output turns on when the corresponding control switch input from the hazardous location is activated. When using normally closed control switch inputs, a jumper should be installed between terminals 1 and 2. Normally open control switch inputs do not require the optional jumper. When the **non-latching ISO Series** control switch input is activated, its corresponding output turns on. When the control switch input is deactivated, its output turns off. When the **latching ISL Series** control switch input 2, 3 or 4 is activated, its corresponding output turns on. When control switch 2, 3 or 4 is deactivated, its corresponding output remains latched on as long as control switch input 1 is activated; otherwise it turns off immediately. Control switch input 1 also controls output 1 just as in the non-latching ISO Series.

SPECIFICATIONS

CONTROL VOLTAGE	24 or 120 VAC ±10%, 50/60 Hz	
CONTROL SWITCH	Open Circuit Voltage	6.2 VDC
	Short Circuit Current	10 µAmps
RESPONSE TIMES	Operate	6 mSEC (Approx.)
	Release	2.5 mSEC (Approx.)
POWER REQUIRED	2.5 VA	
DUTY CYCLE	Continuous	
CONTACT RATING	SPST-N.O., 5 amps per channel @ 24 or 120 VAC, Resistive; 278 VA, Inductive	
ISOLATION	2500 Volts, Input to Output	
LIFE EXPECTANCY	Mechanical	20 Million Operations
	Electrical	50,000 Operations @ Rated Load
INDICATORS	On When Corresponding Output is On	
TEMPERATURE RATING	Operate	-4° to 131°F (-20° to +55°C)
	Storage	-40° to 185°F (-40° to +85°C)
ENCLOSURE	Style "E" Lexan® Surface Mounted	
TERMINATIONS	(12) #8-32 Screw terminals	
WEIGHT	8 oz.	

DIMENSIONS (INCHES)

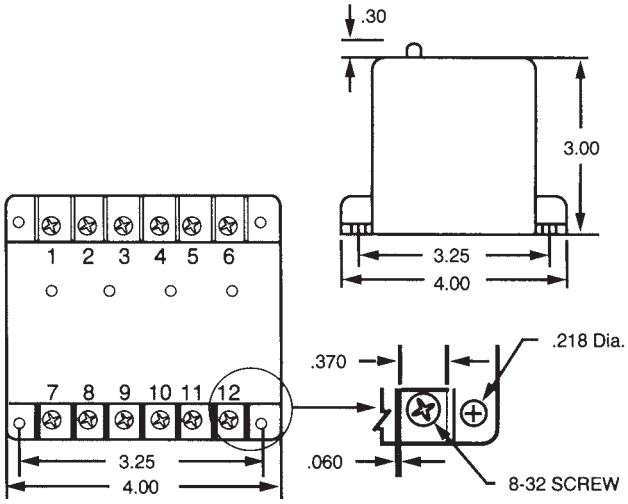

ORDERING INFORMATION

MODEL NUMBER	CONTROL VOLTAGE	CHANNELS
ISL-24-AAE	24 VAC	2
ISL-24-ABE	24 VAC	3
ISL-24-ACE	24 VAC	4
ISL-120-AAE	120 VAC	2
ISL-120-ABE	120 VAC	3
ISL-120-ACE	120 VAC	4
ISO-24-AAE	24 VAC	2
ISO-24-ABE	24 VAC	3
ISO-24-ACE	24 VAC	4
ISO-120-AAE	120 VAC	2
ISO-120-ABE	120 VAC	3
ISO-120-ACE	120 VAC	4

CONTROL DRAWING 191

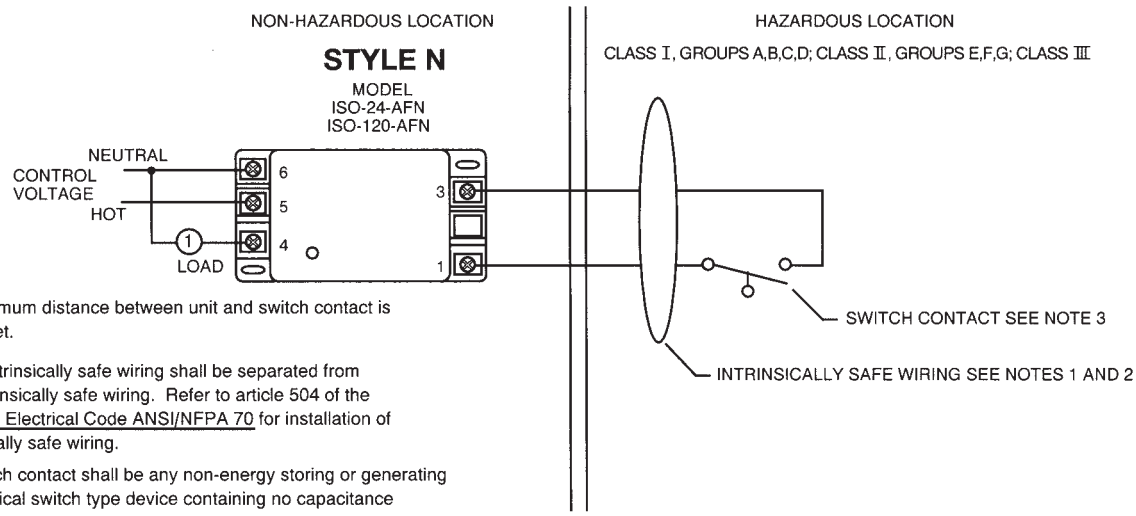

NOTES:

1. Maximum distance between unit and switch contact is 1000 feet.
2. All intrinsically safe wiring shall be separated from non-intrinsically safe wiring. Refer to article 504 of the National Electrical Code ANSI/NFPA 70 for installation of intrinsically safe wiring.
3. Switch contact shall be any non-energy storing or generating mechanical switch type device containing no capacitance or inductance.

CONTROL DRAWING 192

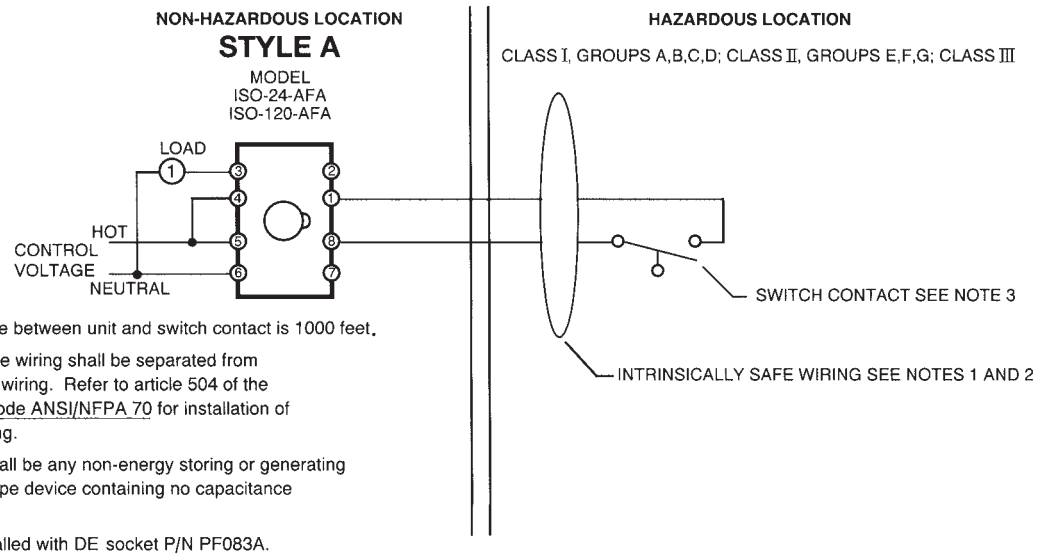

NOTES:

1. Maximum distance between unit and switch contact is 1000 feet.
2. All intrinsically safe wiring shall be separated from non-intrinsically safe wiring. Refer to article 504 of the National Electrical Code ANSI/NFPA 70 for installation of intrinsically safe wiring.
3. Switch contact shall be any non-energy storing or generating mechanical switch type device containing no capacitance or inductance.
4. Unit must be installed with DE socket P/N PF083A.

CONTROL DRAWING 193

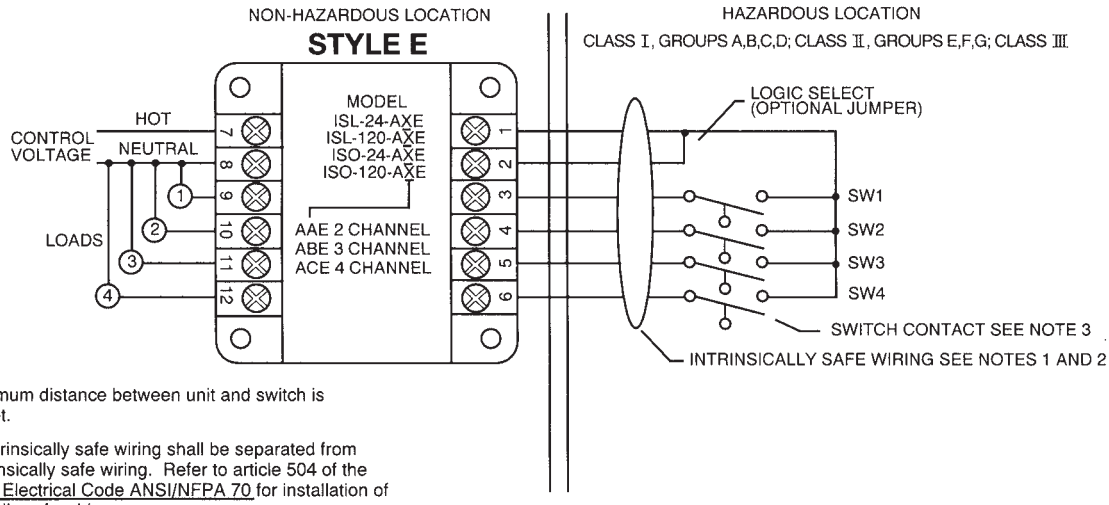

NOTES:

1. Maximum distance between unit and switch is 1000 feet.
2. All intrinsically safe wiring shall be separated from non-intrinsically safe wiring. Refer to article 504 of the National Electrical Code ANSI/NFPA 70 for installation of intrinsically safe wiring.
3. Switch contact shall be any non-energy storing or generating mechanical switch type device containing no capacitance or inductance.
4. Wiring to terminals 5,6,11 and 12 is omitted for models with the suffix AAE.
5. Wiring to terminals 6 and 12 is omitted for models with the suffix ABE.

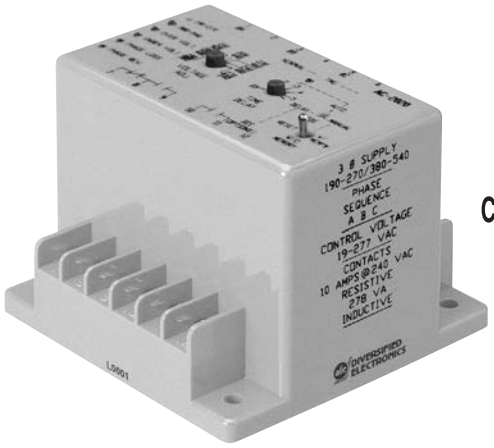

E55826

The **AC 2020 Compressor Protector** provides multimode **time delays, reset** selections and a **memory capability** which indicates using LED's, the last fault condition. This offers not only protection for the compressor in adverse electrical conditions but also a method to readily determine the type of fault occurrence.

3-Phase Compressor Protector

- Automatic Voltage Ranging
- Universal Control Voltage
- Condition/Fault Indicators
- Automatic/Manual Reset
- Last Fault Memory
- Delay-On-Make
- Delay-On-Break
- Auxiliary Contacts
- Easy Installation

PROTECTS AGAINST:

- Phase Loss
- Under Voltage
- Over Voltage
- Phase Reversal
- Short Cycling

ORDERING INFORMATION

MODEL NUMBER	DESCRIPTION
AC-2020	3-Phase Compressor Protector

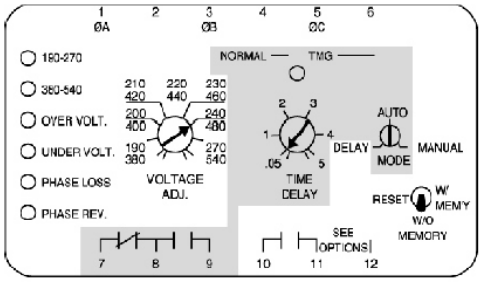

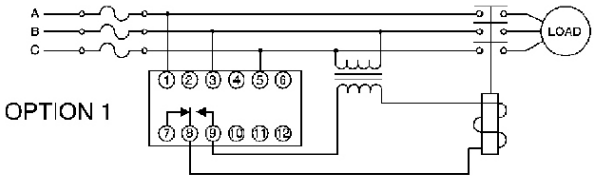

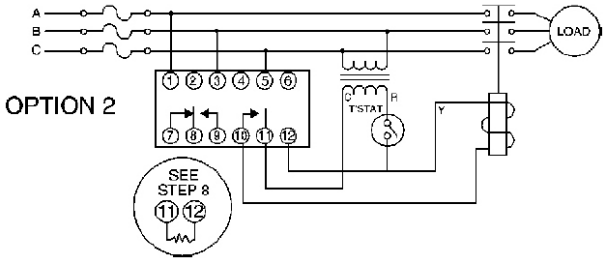

*See instruction Manual for more information.

OPERATING VOLTAGE

AUTO RANGES

240 VAC	190-270 VAC, Adj., 50/60 Hz
480 VAC	380-540 VAC, Adj., 50/60 Hz

SPECIFICATIONS

CONTROL VOLTAGE	24 or 120 VAC ±10%, 50/60 Hz	
TRIP POINTS	Under Voltage	-10% of Setting
	Over Voltage	+10% of Setting
	Hysteresis	5% of Nominal Setting
RESPONSE TIMES	Pick-Up	Auto Mode: 0.05 to 5 Min. (Adj) Delay-On-Make Delay Mode: 3 Min. (Fixed) Delay-On-Break
	Drop-Out	Over/Under Voltage, Phase Loss: 2 SEC (Approximately)
POWER REQUIRED	<5 VA	
MAXIMUM VOLTAGE	550 VAC	
PHASE SEQUENCE	ABC (Will Not Operate On CBA Sequence)	
OUTPUT RATING	9A General Purpose B300 (360VA)	
CONFIGURATION	Control	SPST-N.O.
	Auxiliary	SPDT
MODE SELECTIONS	Automatic; Manual; Delay-On-Break	
RESET SWITCH	With Memory, Without Memory, Auto Reset, Manual Reset	
TRANSIENT WITHSTAND	1500 V @ 8X 20 Microseconds	
TEMPERATURE RATING	Operate	-4° to 131°F (-20° to +55°C)
	Storage	-40° to 185°F (-40° to +85°C)
ENCLOSURE	Style "E" Lexan® Surface Mounted	
TERMINATIONS	(12) #8-32 Screw Terminals	
WEIGHT	6 oz.	

This family of **HVAC controls** provides **short cycle protection** by locking out the compressor for a period of time after a voltage or thermostat interruption. Subsequent interruptions will not increase the delay period. Since the delay begins when the interruption occurs, the temperature control is not affected. Under normal operating conditions, the compressor off time is longer than five (5) minutes. In this case, the use of these timers will not lengthen this off cycle.

This field adjustable model will operate on control voltages of 19 VAC through 288 VAC. Unlike most universal voltage timers, the **AC-503** is a two (2) terminal device that simply connects in series with the control voltage, thermostat and control relay making for easy installation. This timer is engineered to provide **true thermostat interruption protection** even when there is a continuous current flow through the thermostat's cooling anticipator.

NOTE: When used on 120/240 VAC control circuits, the external jumper should be cut. This disables the 24 VAC bypass circuit.

Delay-On-Break Timers

ORDERING INFORMATION

MODEL NUMBER	DESCRIPTION
AC-503	Delay-On-Break Timer

SPECIFICATIONS

CONTROL VOLTAGE	24/120 or 208/240 VAC
OUTPUT RATING	250 VA Inrush; 25 VA Run @ 24 VAC, or 1250 VA Inrush; 125 VA Run @ 120/240 VAC
TIME DELAY	0.1 to 5 min. Adjustable
DIMENSIONS	2.0" x 2.0" x .75" high
WEIGHT	2.5 oz.

WIRING

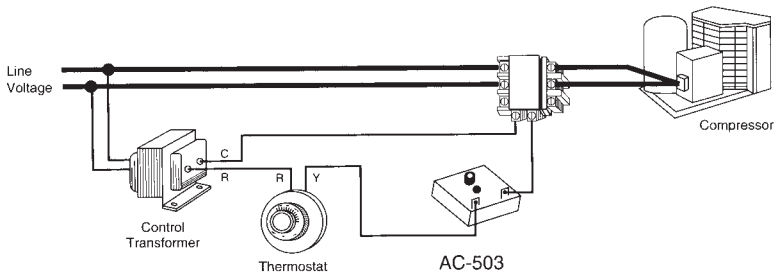

The **AC-505-5** provides **short cycle protection** by locking out the compressor for a period of time after a voltage or thermostat interruption. Subsequent interruptions will not increase the delay period. Since the delay begins when the interruption occurs, the temperature control is not affected. Under normal operating conditions, the compressor off time is longer than five (5) minutes. In this case, the use of these timers will not lengthen this off cycle.

This is an easy to install, two (2) wire Short Cycle Timer that connects in series with the control voltage and control relay. The **AC-505** is engineered to provide **true thermostat interruption protection** even when there is continuous current flow through the thermostat's cooling anticipator.

Delay-On-Break Timer

ORDERING INFORMATION

MODEL NUMBER	DESCRIPTION
AC-505-5	Delay-On-Break Timer

SPECIFICATIONS

CONTROL VOLTAGE	24 VAC
OUTPUT RATING	250 VA Inrush; 25 VA Run @ 24 VAC @ 77°F
TIME DELAY	5 min. ±20%
DIMENSIONS	2.65" x 2.13" x .875" high.
WEIGHT	3 oz.

WIRING

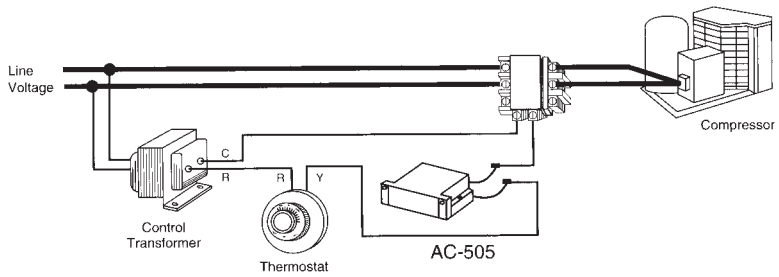

This family of controls provides **short cycle protection** by locking out the compressor for a period of time after a voltage or thermostat interruption. Subsequent interruptions will not increase the delay period. Since the delay begins when the interruption occurs, the temperature control is not affected. Under normal operating conditions, the compressor off time is longer than five (5) minutes. In this case, the use of these timers will not lengthen this off cycle.

These are easy to install two (2) terminal **Short Cycle Timers** that connect in series with the control voltage and control relay. The 24 VAC model employs a built-in bypass circuit for allowing continuous flow through the thermostat's cooling anticipator while the timer output is off.

C US
E55826

Delay-On-Break Timer

SPECIFICATIONS

CONTROL VOLTAGE	ASC-500-5	24 VAC
	ASC-501-5 ASC-501-3	110/120 VAC
	ASC-502-5 ASC-502-3	208/240 VAC
OUTPUT RATING	ASC-500-5	250 VA Inrush; 25 VA Run @ 24 VAC
	ASC-501-5 ASC-501-3	1250 VA Inrush; 125 VA Run @ 120 VAC
	ASC-502-5 ASC-502-3	1250 VA Inrush; 125 VA Run @ 240 VAC
DIMENSIONS	2.0" x 2.0" x .75" high	
WEIGHT	3 oz.	

ORDERING INFORMATION

MODEL NUMBER	DESCRIPTION
ASC-500-5	5 Min. 24 VAC
ASC-501-5	5 Min. 120 VAC
ASC-502-5	5 Min. 240 VAC
ASC-501-3	3 Min. 120 VAC
ASC-502-3	3 Min. 240 VAC

WIRING

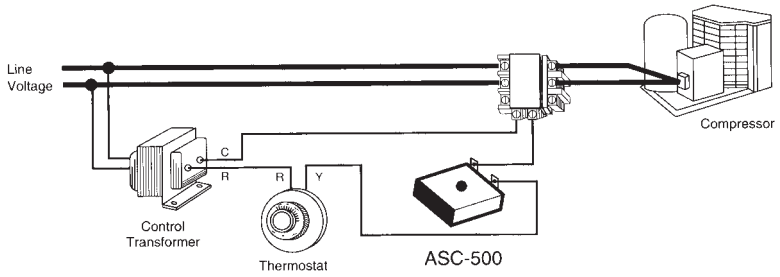

"STAR PERFORMER"

C UL US
E55826

Delay-On-Make Timers

The ATC Diversified **STAR PERFORMER** provides **short cycle protection** of **compressors** by delaying restart after a voltage or control circuit interruption. When the interruption occurs, the control relay drops out. The delay period begins when power is restored, providing random restart.

This **universal voltage** Delay-on-Make Short Cycle Timer provides the ultimate protection against short cycling of a compressor. The Star Performer offers true thermostat interruption protection even in 24 VAC control circuits.

The general conception of thermostat operation is that when the mercury tilts open, all control circuit current stops. The fact is that the cooling anticipator located inside most 24 volt thermostats does allow a small amount of current to flow (trickle current). This trickle current fools most Delay-on-Make Short Cycle Timers, as they will not reset as a result of this continuous current.

The **STAR PERFORMER** is engineered to provide true thermostat interruption protection even when the trickle current is present. The adjustable delay is ideal for providing random starting in multiple equipment installations.

NOTE: When used on 120/240 VAC control circuits, the external jumper should be cut. This disables the 24 VAC bypass circuit.

ORDERING INFORMATION

MODEL NUMBER	DESCRIPTION
AC-800	Delay-On-Make Timer

SPECIFICATIONS

CONTROL VOLTAGE	24/120, 208/240 VAC
OUTPUT RATING	250 VA Inrush; 25 VA Run @ 24 VAC, or 1250 VA Inrush; 125 VA Run @ 120/240 VAC
TIME DELAY	0.2 to 8 min. Adjustable
WEIGHT	2.5 oz. to 3 oz.

WIRING

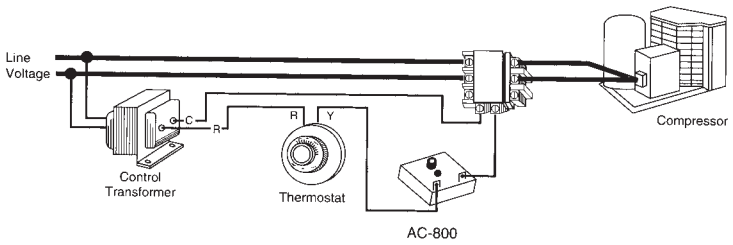

The **AC-410 Series** are plug in Phase Sequence and Loss Monitors that protect 3 phase refrigeration equipment from adverse line conditions such as:

PHASE LOSS (SINGLE PHASING): When any one phase drops to 83% or less of the adjustment setting.

UNDER VOLTAGE (BROWN OUTS): When all three phase voltages drop to 90% or less of the adjustment setting.

PHASE REVERSAL (IMPROPER SEQUENCE): When the wrong sequence is applied to the equipment.

STYLE A

Phase Sequence & Loss Monitor

OPERATION

When any of the mentioned occurs, the internal control relay drops out and a 3 minute delay-on-break time delay begins. This delay is used to lock out the compressor, allowing time for head pressure to equalize. When the delay has completed, the relay will re-energize provided all conditions are corrected and the external control voltage is present on terminals six (6) and seven (7). A green indicator glows when all line conditions are normal and a red indicator shows when the timer is in its delay.

SPECIFICATIONS

DROP OUT	1 Ø Low	83% of Adjustment Setting
	3 Ø Low	90% of Adjustment Setting
PHASE SEQUENCE	ABC (Will Not Operate CBA)	
TIME DELAYS	Operate	3 Minutes ±20%
	Release	100 Milliseconds
OUTPUT RATING	**AC-410**	SPDT, 10 Amps @ 240 VAC, Resistive; 470 VA, Inductive.
	AC-411 & AC-412	SPDT, 10 Amps @ 240 VAC, Resistive; 180 VA, Inductive
TEMPERATURE RATING	Operate	-4° to 131°F (-20° to +55°C)
	Storage	-40° to 185°F (-40° to +85°C)
ENCLOSURE	Style "A"	
WEIGHT	7 oz.	

ORDERING INFORMATION

Consult factory for available models.

WIRING

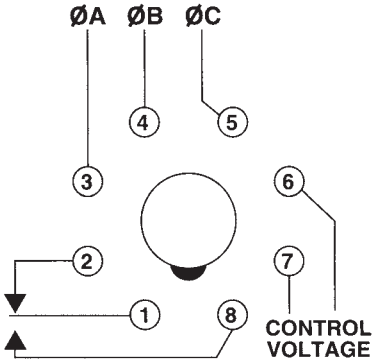

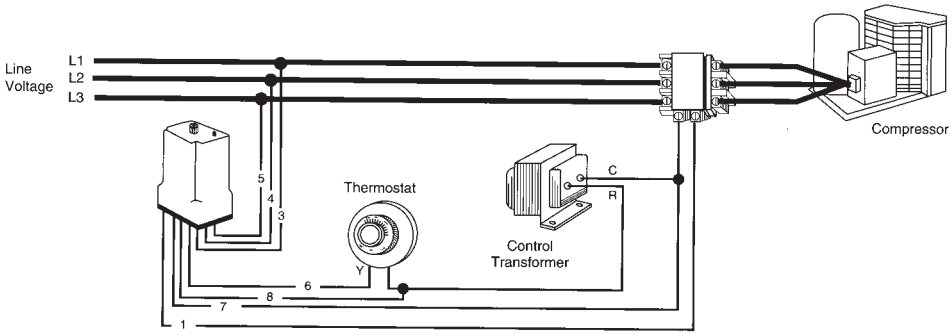

Single Phase Under/Over Voltage Monitor

The **CV-100** and **200 Series** are **Under/Over Voltage Monitors** combined with short cycle protectors used for **appliance control**. These units employ a user selectable voltage range Set Point switch.

OPERATION

This switch should be positioned to match the line voltage for proper operation. When the line voltage goes below (brown out) or above the preselected operating range, the internal relay drops out removing the plugged-in appliance from these adverse fault conditions. When the voltage returns to the normal operating range, a five (5) minute delay begins. Upon completion, the internal relay picks up allowing the plugged-in appliance to start. LED indicators give an immediate visual reference as to the status of the control. The GREEN LED indicates conditions are normal. When a fault condition occurs the GREEN LED will extinguish and the RED LED will glow. When a fault condition has been corrected, the RED LED will begin to flash. The RED LED will continue to flash until the five (5) minute delay period elapses. At the end of the delay period the RED LED will extinguish and the GREEN LED will glow. When both LED's are extinguished, a total loss of power is indicated.

The **CV-XXX-AFN** Series monitors under voltage only and do not feature LED indicators. They also incorporate the five (5) minute short cycle delay. This style is epoxy encapsulated to protect against adverse environmental conditions.

MODEL NUMBER	SET POINT	VOLTAGE 50/60 HZ	UNDER VOLTAGE DROP OUT	UNDER VOLTAGE PICK UP	OVER VOLTAGE PICK UP	OVER VOLTAGE DROP OUT	OUTPUT RATING RUN	OUTPUT RATING LOCK ROTOR	RECEPTACLE STYLE	WEIGHT
CV-100RS	110	110 VAC	87 VAC	95 VAC	120 VAC	128 VAC	15A	40A		8.5 oz
	120	120 VAC	95 VAC	103 VAC	131 VAC	140 VAC	15A	40A		
CV-200RS-15	230	230 VAC	190 VAC	198 VAC	243 VAC	253 VAC	15A	52A		8.5 oz.
	240	240 VAC	202 VAC	210 VAC	258 VAC	268 VAC	15A	52A		
CV-200RS-20	230	230VAC	190 VAC	198 VAC	243 VAC	253 VAC	20A	72A		8.5 oz
	240	240 VAC	202 VAC	210 VAC	258 VAC	268 VAC	20A	72A		
CV-120-AFN	N/A	120 VAC	95 VAC	103 VAC	N/A	N/A	20A	52A	Not Applicable 1/4" quick" disconnect terminals	8.5 oz.
CV-230-AFN	N/A	230 VAC	190 VAC	198 VAC	N/A	N/A	20A	52A		
CV-240-AFN	N/A	240 VAC	202 VAC	210 VAC	N/A	N/A	20A	52A		

OPERATION

The ATC Diversified **SPM Series** Single Channel Seal Failure module is a specialized control for monitoring the **shaft seal** of a **submersible pump motor**. A leak is detected by sensing the position of a resistive float switch installed in the seal cavity. When the resistance drops below the sensitivity rating, the output relay energizes and the LED illuminates.

E55826

Single Channel Seal Failure Alarm

DIMENSIONS (INCHES)

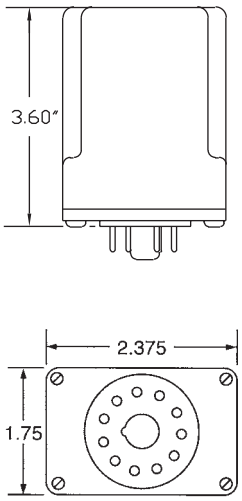

WIRING

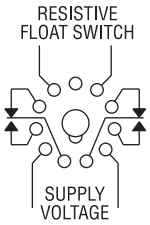

RB-11/PF013A

SPECIFICATIONS

CONTROL VOLTAGE	120 VAC, 50/60 Hz	
SWITCH VOLTAGE	9 VDC	
ISOLATION	2500 Volts	
POWER REQUIRED	2 VA	
DUTY CYCLE	Continuous	
SENSITIVITY	470 Ω ±10% Fixed 300 Ω to 10K Ω ±10% Adjustable 4.7K Ω to 100K Ω ±10% Adjustable	
CONTACT RATING	DPDT, 10 A @ 250 VAC Resistive	
RESPONSE TIMES	Operate	15 ms (approximately)
	Release	8 ms (approximately)
LIFE EXPECTANCY	Mechanical 10,000,000 Operations (Minimum)	
	Electrical 50,000 Operations @ Rated Load	
INDICATORS	Red LED illuminates when leak is detected	
TEMPERATURE RATING	Operate	-4° to 131°F (-20° to +55°C)
	Storage	-40° to 185°F (-40° to +85°C)
ENCLOSURE	11-Pin plug-in "A" style enclosure	
WEIGHT	8 oz.	

MODEL NUMBER

MODEL NUMBER	SPM	120	AAA	
SENSITIVITY				
470 Ω ±10% Fixed				470
300 Ω to 10K Ω ±10% Adjustable				10K
4.7K Ω to 100K Ω ±10% Adjustable				100K

c UL us
E55826

Dual Channel Seal Failure Alarm

OPERATION

The ATC Diversified Electronics **SPM Series *dual* Seal Failure** module is a specialized control for monitoring the shaft seals of ***two* submersible pump motors**. Leaks are detected by sensing the conductivity of the contaminating fluid through probes installed in the seal cavity. When a seal begins to leak, the seal failure module energizes one of its SPST output relays indicating that the seal needs to be replaced before the motor is damaged. The sensitivity of the probe inputs is field adjustable. When the resistance between one of the probe inputs and the common connection drops below the sensitivity setting, the corresponding output relay and LED are activated.

SPECIFICATIONS

CONTROL VOLTAGE	120 VAC, 50/60 Hz	
SWITCH VOLTAGE	9 VDC	
ISOLATION	2500 Volts	
POWER REQUIRED	2 VA	
DUTY CYCLE	Continuous	
SENSITIVITY	10K Ω to 25K Ω ±10% Adjustable 4.7K Ω to 100K Ω ±10% Adjustable	
CONTACT RATING	(2) SPST-N.O., 5 A @ 120 VAC Resistive	
LIFE EXPECTANCY	Mechanical	20 Million Operations
	Electrical	50,000 Operations @ Rated Load
INDICATORS	Red LED illuminates when leak is detected	
TEMPERATURE RATING	Operate	-4° to 131°F (-20° to +55°C)
	Storage	-40° to 185°F (-40° to +85°C)
ENCLOSURE	8-Pin plug-in "A" style enclosure	
WEIGHT	8 oz.	

MODEL NUMBER

MODEL NUMBER	SPM	120	ABA	
SENSITIVITY				
10K Ω to 25K Ω ±10% Adjustable				25K
4.7K Ω to 100K Ω ±10% Adjustable				100K

DIMENSIONS (INCHES)

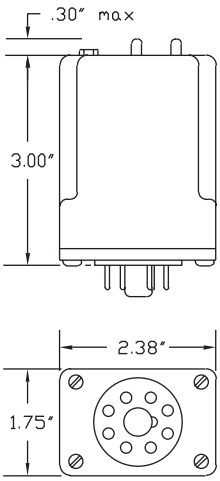

WIRING

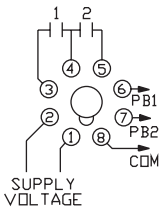

RB-08/PF083A

OPERATION

The non-volatile **Latching Temperature Switch** relay monitors a normally-closed-low temperature switch. It incorporates a bistable relay that retains its state during power failures. LEDs indicate the status of the relay, and connections for an external reset button are provided for manual control. The reset inputs of multiple units may be connected to a single push button as long as proper polarity is observed when making the connections. Under normal conditions the temperature switch is closed and the relay is de-energized. When the temperature switch opens, the relay energizes and latches on until the temperature switch re-closes and the reset button is pressed. The unit will function properly with zero to 2k Ω of resistance in series with the temperature switch.

c UL® US
E55826

Temperature Switch Relay

DIMENSIONS (INCHES)

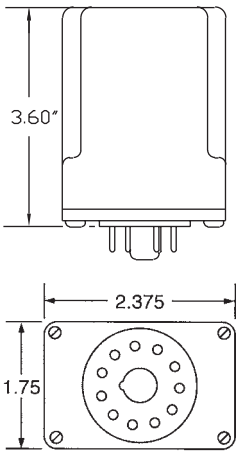

WIRING

ACA

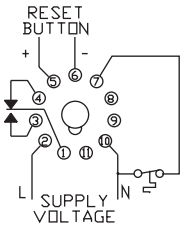

RB-11/PF113A

ADA

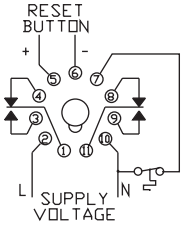

RB-11/PF113A

SPECIFICATIONS

CONTROL VOLTAGE	120 VAC, 50/60 Hz	
POWER REQUIRED	2 VA	
DUTY CYCLE	Continuous	
CONTACT RATING	SPM-120-ACA	SPDT, 10 A @ 250 VAC, Resistive, 360 VA Ind.
	SPM-120-ADA	DPDT, 10 A @ 250 VAC, Resistive
RESPONSE TIMES	Operate	10 ms (approximately)
	Release	1 SEC (approximately)
LIFE EXPECTANCY	Mechanical	30 Million Operations
	Electrical	50,000 Operations @ Rated Load
INDICATORS	SPM-120-ACA	Green LED illuminates under normal conditions Red LED illuminates under fault conditions
	SPM-120-ADA	None
TEMPERATURE SWITCH	Voltage	12 VDC
	Current	2 mA max.
TEMPERATURE RATING	Operate	-4° to 131°F (-20° to +55°C)
	Storage	-40° to 185°F (-40° to +85°C)
ENCLOSURE	11-Pin plug-in "A" style enclosure	
WEIGHT	8 oz.	

ORDERING INFORMATION

MODEL NUMBER	DESCRIPTION
SPM-120-ACA	SPDT, 10A @ 250V AC Latching Temp Switch
SPM-120-ADA	DPDT, 10A @ 250V AC Latching Temp Switch

c UL us
LISTED
IND. CONT. EQ.
496Y
(Model AEE)

Submersible Pump Monitor
Dual Function Alarm Relay

The ATC Diversified **Submersible Pump Monitor** is a specialized control for monitoring the **shaft seal** and stator **temperature** of a **submersible pump motor.** Seal leakage is detected by either a resistive float switch or a pair of conductive probes installed in the seal cavity. Over-temperature is detected by a normally-closed-low temperature switch mounted on the stator. The over-temperature function incorporates a bistable relay that retains its position during power failures. For (S) models over-temperature reset can be configured by changing the reset switch.

SPECIFICATIONS

CONTROL VOLTAGE	120 VAC, 50/60 Hz (Model AEE) 120-240V AC 50/60 Hz (Model AEA) 24V AC/DC (Model AEA)
SENSOR VOLTAGE	12 VDC (Model AEE) 9V DC (Model AEA)
POWER REQUIRED	4 VA
DUTY CYCLE	Continuous
SENSITIVITY	Leakage 1K Ω to 35K Ω adjustable (Model AEE) 1K Ω to 25K Ω adjustable (Model AEA) 4.7K Ω to 100K Ω adjustable (Model AEA) Over Temperature Open Circuit
CONTACT RATING	(2) SPDT, 10 A @ 120 VAC Resistive
LIFE EXPECTANCY	Mechanical 10 Million Operations Electrical 100,000 Operations @ Rated Load
INDICATORS	Green LED illuminates under normal conditions Red LED illuminates when leak is detected Red LED illuminates on over-temperature
TEMPERATURE RATING	Operate -4° to 131°F (-20° to +55°C) Storage -40° to 185°F (-40° to +85°C)
RESPONSE TIMES	Leakage Trip 1 SEC Leakage Reset 1 SEC Temperature Trip 0.1 SEC
TERMINATIONS	(12) #8-32 Screw Terminals (Model AEE)
ENCLOSURE	Style "E" Lexan® Surface Mounted (Model AEE) Style "A" 11 Pin Plug-In (Model AEA)
WEIGHT	17 oz. (Model AEE)
RESET	Seal Leakage: When the leakage condition clears the relay resets automatically Over Temperature: 1. Remote Manual Reset 2. For "S" type models when reset switch is set in auto position the unit will be reset by interrupting supply voltage for 1.5 sec.

ORDERING INFORMATION

MODEL NUMBER	DESCRIPTION
SPM120AEE	Dual Function Alarm Relay 120 vac Base Mount.
SPM120AEA25K	Dual Function Alarm Relay 120 vac, 1k to 25 k sensitivity, Plug-in.
SPM24AEA25K	Dual Function Alarm Relay 24v ac/dc, 1k to 25 k sensitivity, Plug-in.
SPM120AEA100K	Dual Function Alarm Relay 120 vac, 4.7k to 100 k sensitivity, Plug-in.
SPM24AEA100K	Dual Function Alarm Relay 24v ac/dc 4.7k to 100 k sensitivity, Plug-in.
SPM120AEA(S)25K	Dual Function Alarm Relay 120 vac, 1k to 25 k sensitivity, Plug-in, reset mode selector switch.
SPM24AEA(S)25K	Dual Function Alarm Relay 24v ac/dc, 1k to 25 k sensitivity, Plug-in, reset mode selector switch.
SPM120AEA(S)100K	Dual Function Alarm Relay 120 vac, 4.7k to 100k sensitivity, Plug-in, reset mode selector switch.
SPM24AEA(S)100K	Dual Function Alarm Relay 24v ac/dc, 4.7k to 100k sensitivity, Plug-in, reset mode selector switch.

DIMENSIONS (INCHES) MODEL (AEE) BASE MOUNT

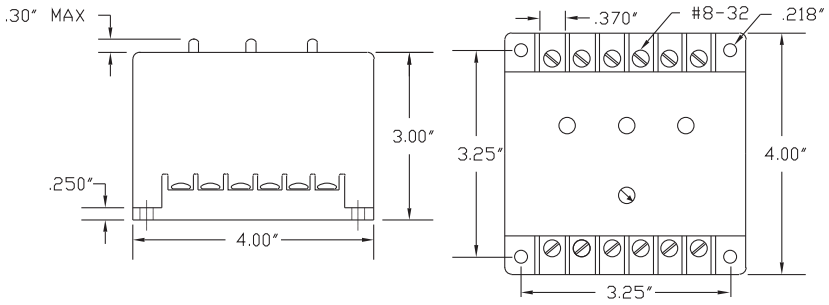

DIMENSIONS (INCHES) MODEL (AEA) 11 PIN PLUG-IN

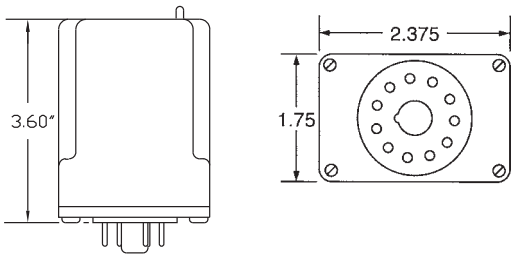

OPERATION

Figure 1 shows the connections for use with a Flygt model FLS float switch. The leakage sensitivity must be adjusted to 1 k for float switch applications. If a pair of conductive probes is used to sense seal leakage, a 100 k resistor is required as shown in Figure 2, and the sensitivity should be set to the desired value.

The states of the unit's relay outputs are determined by the series combination resistance of the leakage and temperature sensors. Under normal conditions the resistance remains between the leakage and over-temperature sensitivities, and both output relays are de-energized. If the temperature switch opens, the over-temperature relay latches on until the remote reset button is pressed. Two conditions must be met for reset to occur: power must be applied and the temperature switch must be closed. If the leakage sensor resistance drops below the leakage sensitivity setting, the leakage relay energizes. When the leakage condition clears, the relay resets automatically.

E55826
(Model AEA)

WIRING MODEL (AEE) (BASE MOUNT)

Figure 1

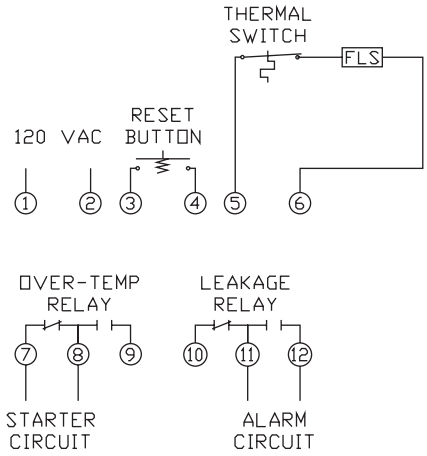

Figure 2

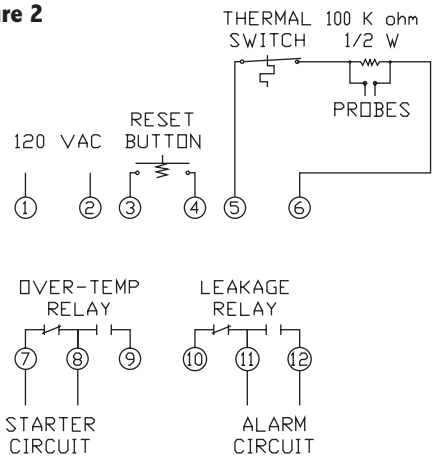

WIRING MODEL (AEA) (PLUG-IN)

Figure 1

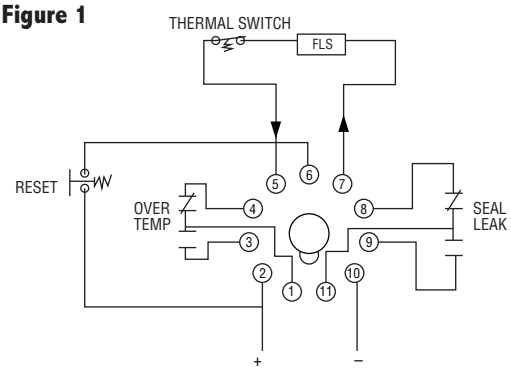

Figure 2

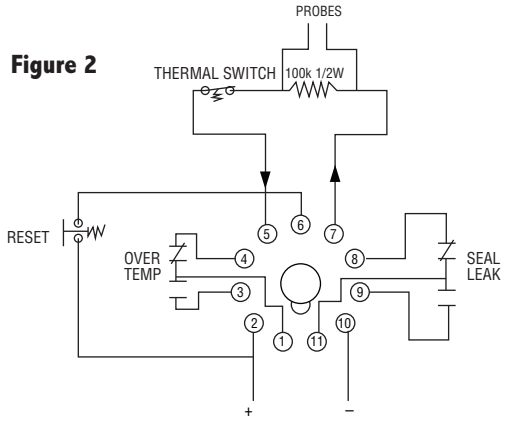

ACCESSORIES: SOCKETS

OT11-PC 11 pin din-rail mount socket.

RB-11 11 pin surface mount socket.

Phase Rotation Tester

The **PRT-100** is a hand-held tester that takes the guesswork out of connecting a 3-phase motor. The direction of rotation of a motor depends on **phase sequence** of the power line connections. If the sequence is reversed, the motor will run in the wrong direction, possibly damaging the equipment connected to the motor. The **PRT-100** identifies the leads of a three-phase motor and detects the sequence of a three-phase power line. Once the motor and line leads are properly identified, the motor can be wired so that it turns in the desired direction on the first try. The unit also detects phase loss and no voltage conditions.

SPECIFICATIONS

SUPPLY VOLTAGE	20 to 600 VAC, 50/60/400 Hz	
SENSOR VOLTAGE	12 VDC	
ABSOLUTE MAXIMUM VOLTAGE	700 VAC, Phase-to-Phase	
BATTERY	9V, Included	
ISOLATION	3000 VAC, Leads to User	
ROTATION/ SEQUENCE	Red	Phase Loss/No Voltage
	Yellow	Low Battery
OPERATOR CONTROL	Momentary Test Button	
INDICATORS	Green	Normal Rotation/Sequence
	Red	Reverse
TEMPERATURE	Operate	32° to 113°F (0° to +45°C)
	Storage	-40° to 140°F (–40° to +60°C)
RESPONSE TIMES	100ms	
LEADS	18", color coded, battery clip type	
DIMENSIONS	3.75 x 2.625 x 1.5 inches	
WEIGHT	NET: 4.16 oz	

OPERATION

To identify the leads of a three-phase line, connect the tester to the energized line and press the test button. Either the normal or reverse LED will glow. If the reverse LED glows, switch two leads and press the test button again. The normal LED should now glow. Label the three-phase line conductors according to the marking on the tester. If the loss LED glows, a phase loss or no voltage condition exists, and the normal and reverse LEDs are meaningless. Correct the loss condition and retest.

To identify the leads of a three-phase motor, connect the tester to the de-energized motor, turn the rotor in the desired direction, and press the test button. If the reverse LED glows, switch two leads and repeat. The normal LED should now glow. Label the motor leads according to the markings on the tester. NOTE: the loss LED will glow during motor testing. This is normal since the turning motor generates less than 20 volts.

De-energize the three-phase line and connect the line conductors to the matching motor leads. When the motor is energized, it will run in the desired direction.

DIMENSIONS (INCHES)

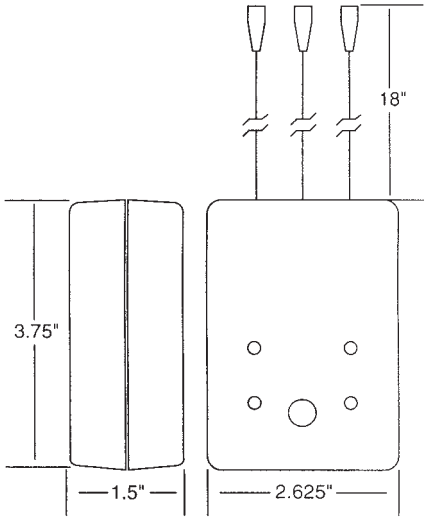

ORDERING INFORMATION

MODEL NUMBER	DESCRIPTION
PRT-100	Phase Rotation Test

The **UPA-100 Power Alert** reduces the risk **of electrical arc flash** by pre-verifying the electrical isolation from outside of a control panel. Hard wired to the circuit breaker or main disconnect, the UPA flashes whenever voltage is present. Engineered with **redundant circuitry**, the Power Alert is powered by the same voltage that it indicates.

c UL US
LISTED
IND. CONT. EQ.
496Y

UL TYPE
4X

Universal Power Alert

OPERATION

The eight detector UPA-100 visually alerts to the presence of dangerous AC or DC (Stored Energy) potentials occurring between any combination of the four monitored input lines (L1, L2, L3, GND). Two LED indicators are assigned to each input line and are designated "+" and "-". For each input line carrying an AC potential (bi-polar), both the "+" and "-" LEDs will be active. A DC or Stored Energy potential will illuminate the "+" LED for the positive line and the "-" LED for the negative line.

OSHA 1910.147 THE CONTROL OF HAZARDOUS ENERGY (LOCKOUT/TAGOUT)

Following the application of lockout or tagout devices to energy isolating devices, all potentially hazardous stored or residual energy shall be relieved, disconnected, restrained, and otherwise rendered safe. (d)(5)(ii)

If there is a possibility of reaccumulation of stored energy to a hazardous level, verification of isolation shall be continued until the servicing or maintenance is completed, or until the possibility of such accumulation no longer exists. (d)(6)

"Verification of Isolation." Prior to starting work on machines or equipment that have been locked out or tagged out, the authorized employee shall verify that isolation and de-energization of the machine or equipment have been accomplished.

- Detects Single or 3-Phase AC & DC Voltage or Stored Energy
- Redundant Circuitry
- Verification of Zero Energy in a Panel
- Fits 1-1/4" Conduit Knock-Out

SPECIFICATIONS

OPERATIONAL RANGE	AC Single or 3-Phase	40 to 600 VAC, 50/60/400 Hz, (LINE-TO-LINE or LINE-TO-GND)
	DC or Stored Energy	30 to 1000 VDC, (LINE-TO-LINE or LINE-TO-GND)
MAXIMUM RATED VOLTAGE	750 VAC/1000 VDC (LINE-TO-LINE or LINE-TO-GND)	
DETECTION THRESHOLDS	29 VAC 3-Phase, 40 VAC SINGLE-Phase, 27 VDC (TYP Cutoff)	
POWER CONSUMPTION	1.2 Watts @ 750 VAC (Approximately)	
TEMPERATURE RATING	Operate	-4° to 131°F (-20° to +55°C)
	Storage	-40° to 185°F (-40° to +85°C)
ENCLOSURE	NEMA 4X 105°C PVC, Totally Encapsulated for Environment Protection	
TERMINATIONS	(4) 8 ft, 18 AWG 1000V, UL-1452	
WEIGHT	9 oz.	

INDICATOR FLASH RATES (L1, L2, L3, GND)

3- Phase Line-To-Line (VAC)	<29	30	120	240	480	600	750
Flashes/Sec (Typical)	0	1.3	4.2	5.8	7.3	8.0	8.8
DC or Stored Energy (VDC)	<27	30	48	110	300	600	1000
Flashes/Sec (Typical)	0	1.6	2.5	4.5	6.9	8.8	9.1

GND DETECTOR THRESHOLDS (LEAKAGE ANY PHASE-TO-GROUND)

3- Phase Line-To-Line (VAC)	30	120	240	480	750
L1, L2, or L3 To Ground Continuity (OHMS)	2M	2M	3M	5M	7M
Detector Included Fault Current (µA)	7	26	38	60	67

DETECTOR INCLUDED FAULT CURRENT (PHASE-TO-GROUND SHORT)

3- Phase Line-To-Line (VAC)	30	120	240	480	750
0 OHM Phase-To-Ground Current (µA)	28	108	219	455	730

ORDERING INFORMATION

MODEL NUMBER	DESCRIPTION
UPA-100	Universal Power Alert
UPA-100S	Universal Power Alert Solid-ON Red
Accessories UPA-WP100	ANSI WARNING Plate

The UPA-100 Series is UL Listed under UL File Number E55826.

UPA-100C UNIVERSAL POWER ALERT CAT III CAT IV

DIMENSIONS
(INCHES)

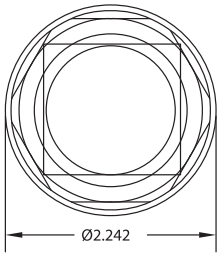

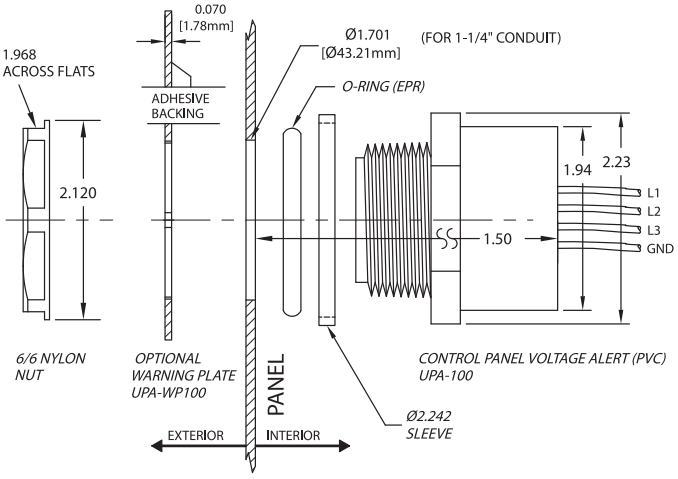

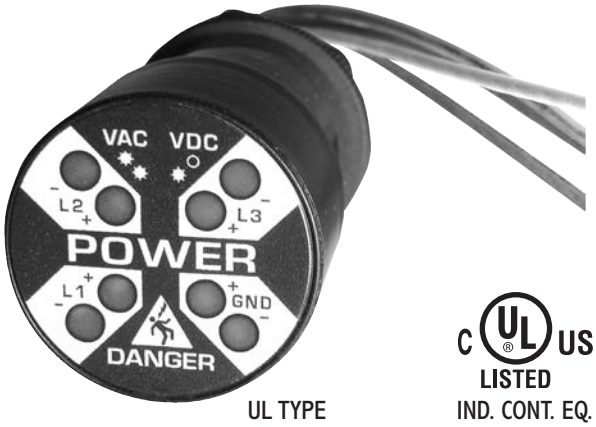

UL TYPE
4X, 12, 13

C UL US
LISTED
IND. CONT. EQ.
496Y

30mm Universal Power Alert

- Verification of Stored Energy Inside A Panel
- Fits 30mm Knockout
- Redundant Circuitry
- 40-750 VAC, 30-1000 VDC

The **UPA 130 Power Alert** reduces the risk of **electrical arc flash** by pre-verifying the electrical isolation from outside of a control panel. Hard wired to the circuit breaker or main disconnect, the UPA flashes whenever voltage is present. Engineered with redundant circuitry, the Power Alert is powered by the same voltage that it indicates.

OPERATION

The eight detector UPA-130 visually alerts to the presence of dangerous AC or DC (Store Energy) potentials occurring between any combination of the four monitored input lines (L1, L2, L3, GND). Two LED indicators are assigned to each input line and are designated "+" and "-". For each input line carrying an **AC potential** (bi-polar) , both the "+" and "-" LEDs will be active. A DC or **Stored Energy potential** will illuminate the "+" LED for the positive line and the "-" LED for the negative line.

The UPA-130 Series is UL Listed under UL File Number E55826.

SPECIFICATIONS

OPERATIONAL RANGE	AC SINGLE OR 3-PHASE	40 to 600 VAC, 50/60/400 Hz, (LINE-TO-LINE or LINE-TO-GND			
	DC OR STORED ENERGY	30 to 1000 VDC, (LINE-TO-LINE or LINE-TO-GND)			
MAXIMUM RATED VOLTAGE	750 VAC/1000 VDC (LINE-TO-LINE or LINE-TO-GND)				
DETECTION THRESHOLDS	29 VAC 3-Phase, 40 VAC SINGLE-Phase, 27 VDC (TYP CUTOFF)				
POWER CONSUMPTION	1.2 Watts @ 750 VAC (Approximately)				
TEMPERATURE RATING	Operate	-4° to 131°F (-20° to +55°C)			
	Storage	-40° to 185°F (-40° to +85°C)			
ENCLOSURE	Totally Encapsulated for Environment Protection				
TERMINATIONS	(4) 8 ft, 18 AWG 1000V, UL-1452	RED L1	YEL L2	BLU L3	GRN/YEL GRD
WEIGHT	7 oz.				

INDICATOR FLASH RATES (L1, L2, L3, GND)

3- Phase Line-To-Line (VAC)	<29	30	120	240	480	600	750
Flashes/Sec (Typical)	0	1.3	4.2	5.8	7.3	8.0	8.8
DC or Stored Energy (VDC)	<27	30	48	110	300	600	1000
Flashes/Sec (Typical)	0	1.6	2.5	4.5	6.9	8.8	9.1

GND DETECTOR THRESHOLDS (LEAKAGE ANY PHASE-TO-GROUND)

3- Phase Line-To-Line (VAC)	30	120	240	480	750
L1, L2, or L3 To Ground Continuity (OHMS)	2M	2M	3M	5M	7M
Detector Included Fault Current (µA)	7	26	38	60	67

DETECTOR INCLUDED FAULT CURRENT (PHASE-TO-GROUND SHORT)

3- Phase Line-To-Line (VAC)	30	120	240	480	750
0 OHM Phase-To-Ground Current (µA)	28	108	219	455	730

ORDERING INFORMATION

MODEL NUMBER	DESCRIPTION
UPA-130	30mm Universal Power Alert
UPA-130-DIV2	Class I, Div 2
UPA-130S	Solid ON
UPA-130-GOV	Amber LED
Accessories	
UPA-WP130	ANSI Warning Plate
UPA-BZL	Flush Mounting Kit for UPA-130 Series Flash 1-1/4" knockout

WIRING

THREE PHASE WYE, 4W + GND

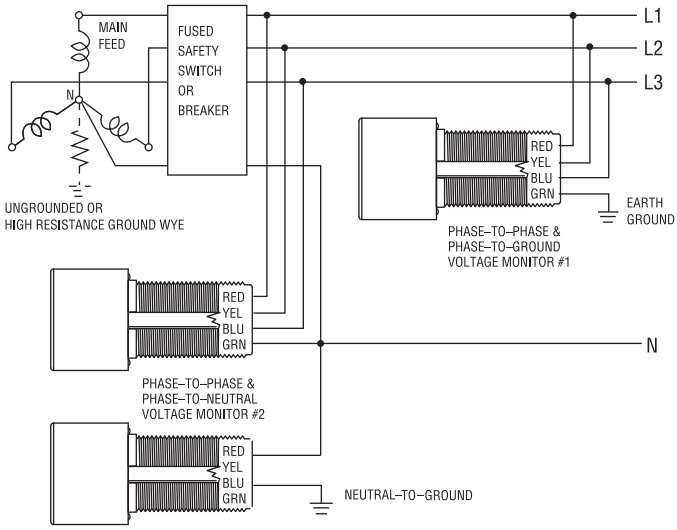

DC SINGLE SOURCE, 2W + GND

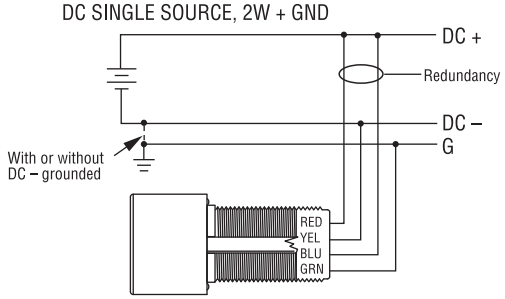

DC SPLIT SUPPLY, 3W + GND

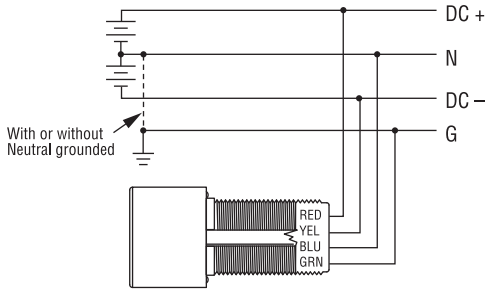

THREE PHASE DELTA, 3W + GND

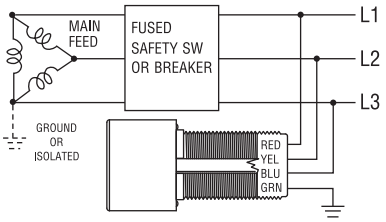

SINGLE PHASE, 2W + GND

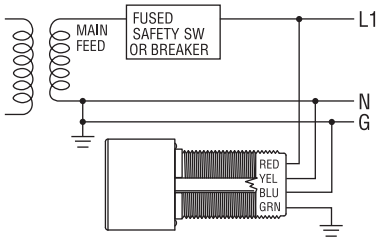

SINGLE PHASE, 3W + GND

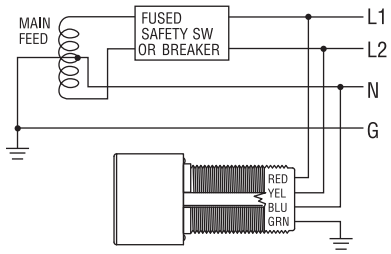

DIMENSIONS (INCHES)

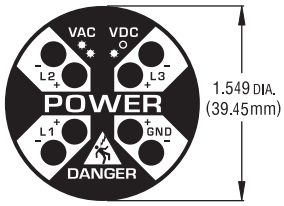

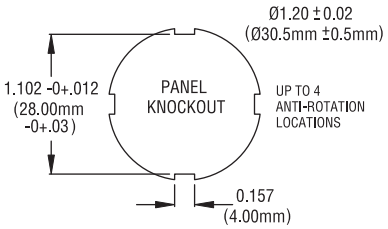

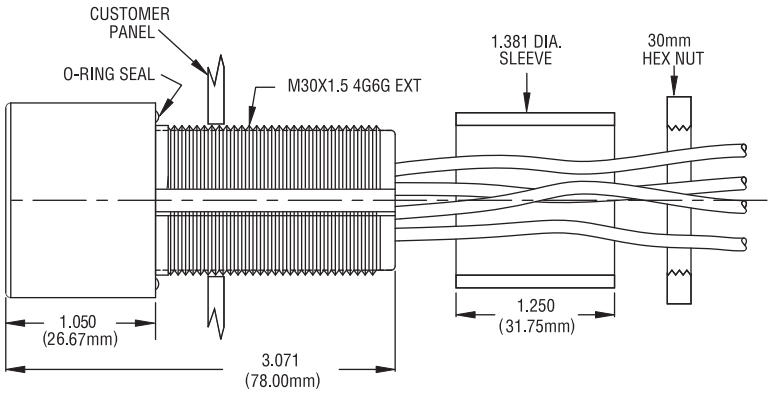

C UL US
LISTED
IND. CONT. EQ.
496Y

Universal Power Alert Zero Energy

- Ideal for use in Lockout/Tagout Procedure
- Enhances NFPA 70E & OSHA Compliance
- Reduces Arc Flash & Electrocution Risk
- Detects Stored Energy
- Detects Ground Fault Problems
- No Voltage Present on Enclosure Door Panels
- DIN Rail or Surface Mounted Base

The **UPA-200 Power Alert** reduces the **risk of electrical** arc flash by pre-verifying the electrical isolation from outside of an electrical panel. Hard wired to the circuit breaker or main disconnect, the UPA LED's flash to indicate the presence of hazardous conditions (20-600 VAC & 20-1000 VDC) associated with stored energy. Engineered with redundant circuitry, the power alert is powered by the same voltage that it indicates. The unit is easily installed into the panels through a standard push-button 33mm knockouts.

The UPA-200 is ideal for mounting on the front controller door panel. The use of fiber-optics on this unit to transmit the LED lights to the enclosure door allows the unit to be mounted on an ungrounded door panel due to no voltage present on panel.

The eight detector UPA-200 visually alerts to the presence of dangerous AC or DC (Stored Energy) potentials occuring between any combination of the four minitored input lines (L1, L2, L3, GND). Two LED indicators are assigned to each input line are designate "+" and "–". For each input line carrying an AC potential (bi-polar), both the "+" and "–" LEDs will be active. A DC or Stored Energy potential will illuminate the "+" LED for the positive line and the "–" LED for the negative line.

SPECIFICATIONS

OPERATIONAL RANGE	AC 20-600 VAC/20-1000 VDC
MAXIMUM VOLTAGE	750 VAC/1000 VDC line to line
DETECTION THRESHOLDS	14 VAC 3-Phase/18.5 VAC Single 15 VDC Stored Energy
POWER CONSUMPTION	1.2 Watts @ 750 VAC
OPERATING TEMPERATURE	-4° to 131°F (-20° to +55°C)
ENCLOSURE	Totally Encapsulated UL Type 4X, 12, 13*
TERMINATIONS	(4) 6 ft, 18 AWG 1000V, UL-1452
WEIGHT	7 oz.

INDICATOR FLASH RATES (L1, L2, L3, GND)

3- Phase Line-To-Line (VAC)	<14	20	120	240	480	600	750
Flashes/Sec (Typical)	0	0.9	2.6	3.3	3.7	3.8	3.9
DC or Stored Energy (VDC)	<15	20	48	110	300	600	1000
Flashes/Sec (Typical)	0	0.9	1.9	3.2	3.7	4.0	4.0

Epileptic Photosensitivity Compliance: Below 5-30 Flashes/Sec

GND DETECTOR THRESHOLDS (LEAKAGE ANY PHASE-TO-GROUND)

3- Phase Line-To-Line (VAC)	20	120	240	480	750
L1, L2, or L3 To Ground Continuity (OHMS)	2M	5M	7.5M	13M	20M
Detector Included Fault Current (µA)	4	12	17	20	21

DETECTOR INCLUDED FAULT CURRENT (PHASE-TO-GROUND SHORT)

3- Phase Line-To-Line (VAC)	20	120	240	480	750
0 OHM Phase-To-Ground Current (µA)	15	105	216	435	684

ORDERING INFORMATION *

MODEL NUMBER	DESCRIPTION
UPA-200-12	30mm Universal Power Fiber Optic Alert 12" Fiber Optic
UPA-200-24	24" Fiber Optic
UPA-200-48	48" Fiber Optic
UPA-WP130	ANSI Warning Plate
UPA-200-DIV2-XX	Class 1 Div 2

*Consult factory for various fiber optic cable lengths available

WIRING

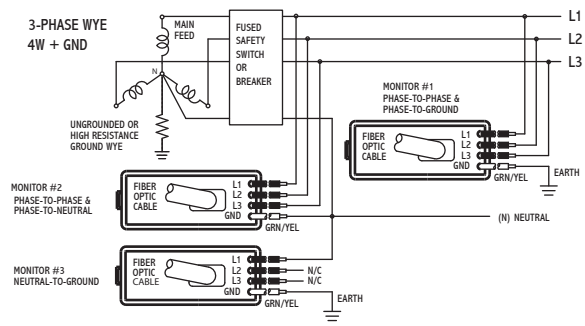

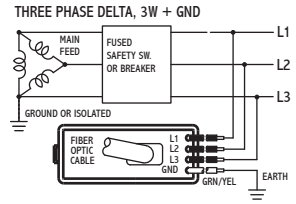

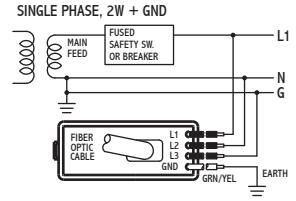

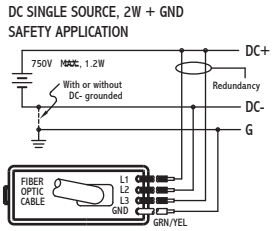

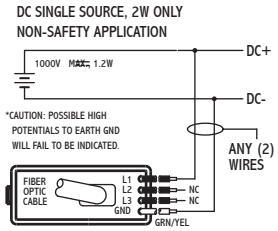

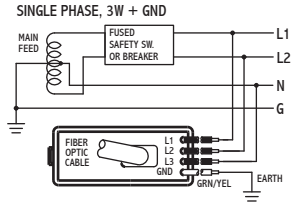

DIMENSIONS

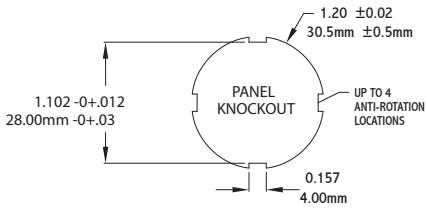

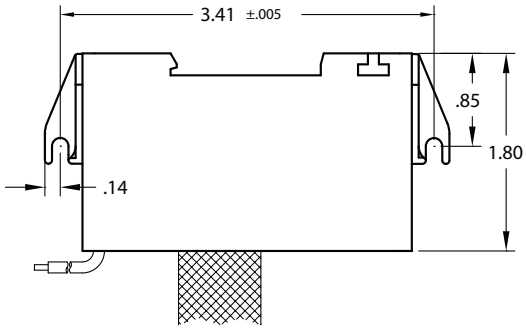

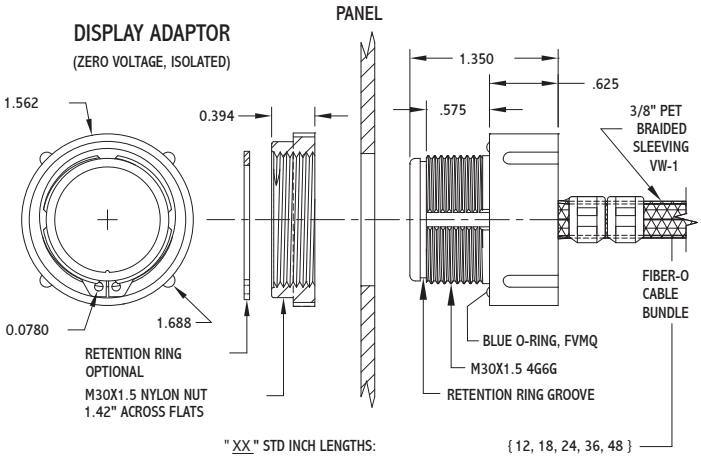

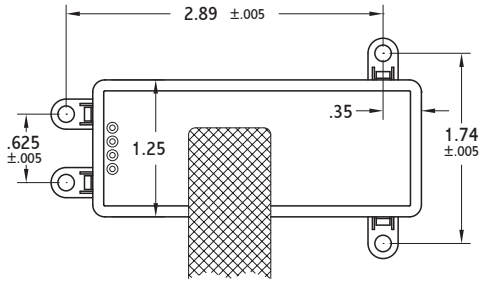

E55826

Fuse Status Indicator

- Shows Normal and Open Fuse
- View Status from a Distance
- Reports Connection Integrity
- Universal Input 208-600 VAC
- Mounts External to Panel
- For All Fuses UL Class H, J, K, R, RK
- Vertical or Horizontal Mount

ORDERING INFORMATION

MODEL NUMBER	DESCRIPTION
BFA-100	Vertical Mount
BFA-200	Horizontal Mount

DIMENSIONS (INCHES)

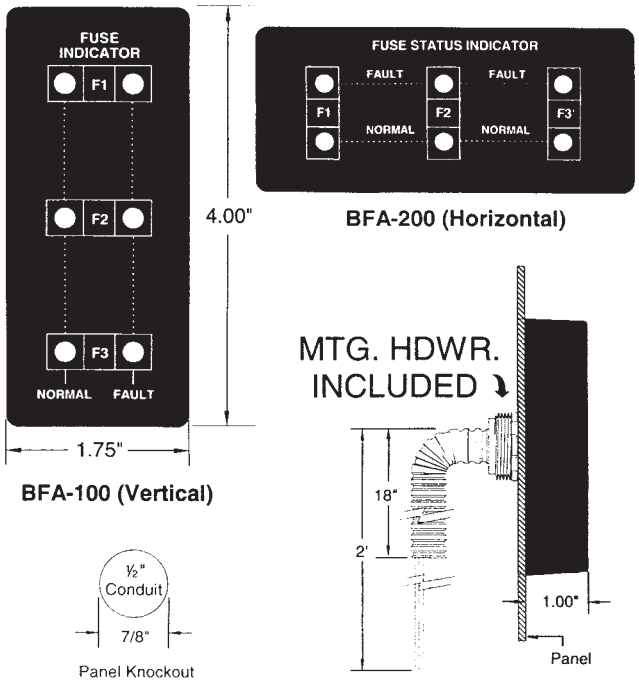

OPERATION

With nominal 3-phase line voltage applied, a flashing green NORMAL LED gives positive indication of a **good fuse** and integrity of the wire connection to each side of the fuse.[1]

A flashing red FAULT LED gives positive indication of an unconnected or **open fuse**, or a BFA wiring fault that needs corrected such as a lost connection to either side of the fuse or mismatched line and load wires.[2]

When phase loss occurs, both FAULT and NORMAL LEDS will extinguish.[3] The BFA will continue to indicate the status of the fuse during a phase loss if a regenerated voltage is produced on the open phase from a rotating motor.[4]

1 2 3 4 BFA-SERIES Troubleshooting Guide

SPECIFICATIONS

NOMINAL VOLTAGE	208-600 VAC, ±10%, Phase-to-Phase, 50/60 Hz	
MAX. CONTINUOUS VOLTAGE	660 VAC, Phase-to-Phase	
REV. CONNECTION PROTECTED	Yes	
DETECTION THRESHOLD	10-15 VAC Across Open Fuse	
MAXIMUM DETECTOR LEAKAGE CURRENT	0.5 mA @ 600 VAC (Approx.)	
FRESNEL LENS INDICATORS	Normal	(3) Green LEDs, 2 Flashes/Sec
	Fault	(3) Red LEDs, 2 Flashes/Sec
MAXIMUM RATED VOLTAGE	750 VAC/1000 VDC (LINE-TO-LINE or LINE-TO-GND)	
DETECTION THRESHOLDS	29 VAC 3-Phase, 40 VAC SINGLE-Phase, 27 VDC (TYP CUTOFF)	
POWER REQUIRED	2.5 VA @ 208 VAC, and 5.5 VA @ 480 VAC	
TEMPERATURE	Operate	32° to 131°F (0° to +55°C)
	Storage	-40° to 185°F (-40° to +85°C)
ENCLOSURE	94V-0 Flame Retardant Black ABS Plastic, Panel Mount with 1/2" Plastic Electrical Conduit Adapter; Encapsulated for Environmental Protection.	
TERMINATIONS	(6) 2', 18 AWG, 600V, 105°C PVC Stranded Wire w/Wire Pin Terminations, Jacketed with 18" Slit Nylon Corrugated Tubing, .556" OD	
WEIGHT	NET: 3.52 oz	Shipping: 5.12 oz

WIRING

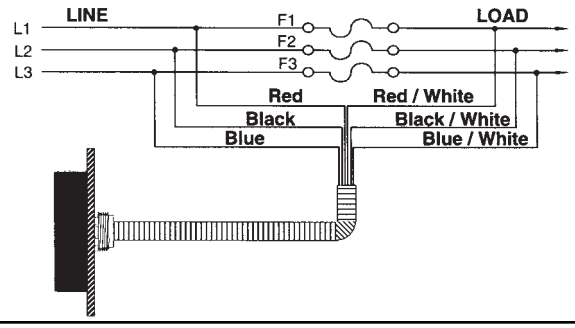

BFA-SERIES 3 PHASE FUSE STATUS INDICATOR TROUBLESHOOTING GUIDE

1.

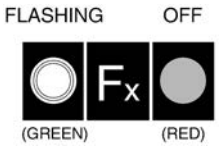

A. Normal, fuse good, electrical contact across fuse

2.

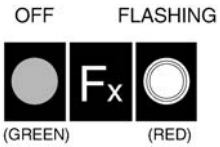

A. Unconnected or blown fuse

B. Bad Connection Load Side (white stripe wire)

C. Both of the above

3.

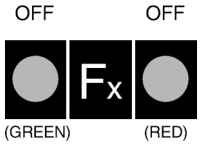

A. Phase voltage loss with no motor regeneration

B. The above accompanied with an unconnected or blown fuse

4.

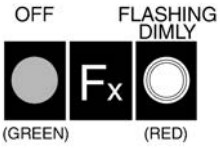

A. Bad Connection Line Side (solid color wire)

B. The above accompanied with an unconnected or blown fuse

C. Phase Voltage loss with motor regeneration accompanied with an unconnected or blown fuse

---

5.

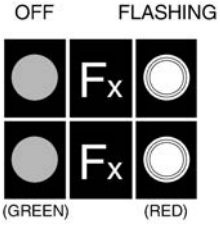

A. (2) Unconnected or blown fuses

B. Corresponding wires interchanged between solid colors or white stripe colors

C. 1 or 2 unconnected or blown fuses and B

6.

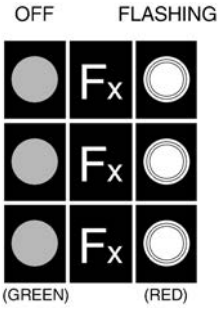

A. (3) Unconnected or blown fuses

B. Line Side connections do not correspond to Load Side connections

C. 1 or more unconnected or blown fuses and B

CAUTION: The BFA should not be confused with ATC Diversified Electronics 3-Phase Voltage Detectors. The BFA is designed to detect blown fuses and not voltage potentials from Phase-to-Ground or Phase-to-Phase in the 40 VAC range and up. It should be understood that dangerous voltage potentials can still exist within the panel even though the BFA has no LEDs flashing. For voltage detection see The ATC Diversified UPA Series Power Alerts.

3-Phase Ground Fault Display

The ATC Diversified Electronics **GFD Series** is intended for the use on ungrounded systems to detect and indicate the phase of the first ground fault condition. This enables corrective action to avoid the potential hazards resulting from a second ground fault.

OPERATION

With nominal 3 phase line voltage applied, a flashing NORMAL green LED gives indication of a non-fault condition and integrity of the wire connection to the corresponding phase.

A flashing red LED gives positive FAULT indication of either a phase-to-ground fault, or a lost connection to the corresponding phase.

NOTE: Distributed capacitance to ground or equally loaded phases to ground will de-sensitize detection and will require lower phase-to-ground resistance to produce a FAULT indication.

DIMENSIONS (INCHES)

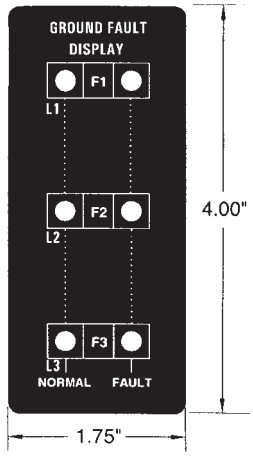

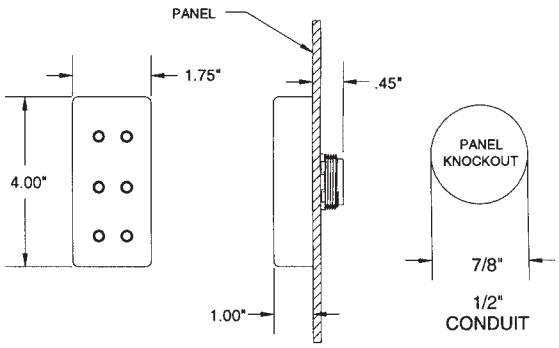

WIRING

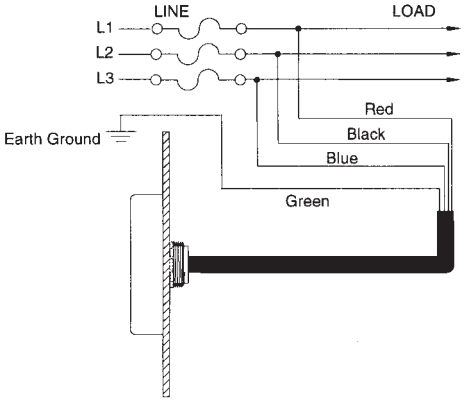

SPECIFICATIONS

NOMINAL VOLTAGE	208-600 VAC, ±10%, Phase-to-Phase, 50/60 Hz	
MAX. CONTINUOUS VOLTAGE	660 VAC, Phase-to-Phase	
REV. CONNECTION PROTECTED	Yes	
DETECTION THRESHOLD	11.7 k Ω ±20% @ 50 Hz; 9.3 k Ω ±20% @ 60 Hz Single Phase-to-Ground	
DETECTOR INDUCED FAULT CURRENT	50 Hz	7.5 mA @ 600 VAC (1 Phase-to-Ground shorted)
	60 Hz	9 mA @ 600 VAC (1 Phase-to-Ground shorted)
FRESNEL LENS INDICATORS	Normal	(3) Green LEDs, 2 Flashes/Sec
	Fault	(3) Red LEDs, 2 Flashes/Sec
APPARENT POWER REQUIRED	50 Hz	2.5 VA @ 600 VAC
	60 Hz	3 VA @ 600 VAC
TEMPERATURE RATINGS	Operate	32° to 131°F (0° to +55°C)
	Storage	-40° to 185°F (-40° to +85°C)
ENCLOSURE	94V-0 Flame Retardant Black ABS Plastic, Panel Mount with 1/4" Plastic Electrical Conduit Adapter, Encapsulated for Environmental Protection	
TERMINATIONS	(4) 2 ft., 18 AWG, 600V, 105°C PVC Stranded Wire w/ Wire Pin Terminations, racketed with 18" Slit Nylon Corrugated Tubing, .556" O.D.	
WEIGHT	NET: 3.52 oz	Shipping: 5.12 oz

ORDERING INFORMATION

MODEL NUMBER	DESCRIPTION
GFD-100	Vertical Mount
GFD-200	Horizontal Mount

SURFACE MOUNTED— RB-08

Recommended for use with all 8 pin octal plug-in devices. UL Recognized and CSA Certified for 10 Amps @ 600 VAC. The molded thermoplastic base has brass, nickel plated inserts with #6-32 steel, nickel plated screws.

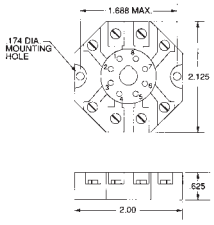

SURFACE MOUNTED— RB-11

Recommended for use with all devices using 8 or 11 pin plug-in bases. UL Recognized and CSA certified for 10 Amp @ 300 VAC. The molded thermoplastic base has brass, nickel plated inserts with #6-32 steel, nickel plated screws.

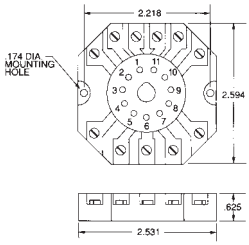

DIN RAIL/SURFACE MOUNTED—OT-08

DIN Rail mount. Recommended for use with all 8 pin octal plugin devices. UL Recognized and CSA Certified for 10 Amps @ 600 VAC. The molded thermoplastic base has brass, nickel plated inserts with #6-32 nickel plated screws.

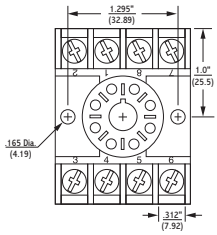

DIN RAIL/SURFACE MOUNTED—PF083A

Recommended for use with all 8 pin octal plug-in devices. UL Recognized and CSA Certified for 10 Amps @ 300 VAC. The molded polycarbonate base has brass, nickel plated inserts with #6-40 steel, nickel plated screws and captive self-lifting terminal clamps.

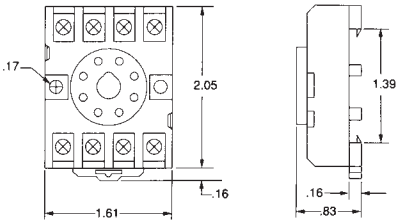

SURFACE MOUNTED— 70-463-1

Recommended for use with all 0.187 blade 11 Pin Square base plug-in devices. UL Recognized and CSA Certified for 10 Amps @ 300 VAC. The molded thermoplastic base has brass, nickel plated inserts with #6-32 steel, nickel plated screws.

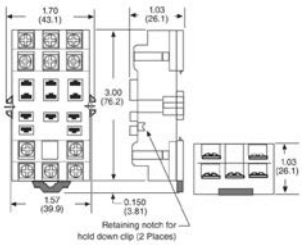

DIN RAIL/SURFACE MOUNTED—PF113A

Recommended for use with all devices using 8 or 11 pin plug-in bases.UL Recognized and CSA certified for 10 Amps @ 300 VAC. The molded polycarbonate base has brass, nickel plated inserts with #6-40 steel, nickel plated screws and captive self lifting terminal clamps.

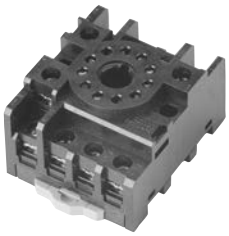

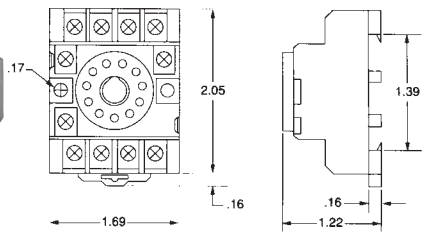

ACCESSORIES

ADJUSTMENT—101026105

Recommended for use with all the ATC Diversified Electronics family of "remote adjustable" timers. Proper spacing is maintained for UL and CSA applications. This linear taper potentiometer has a non-conductive shaft attached to the internal conductive plastic wafer. The brass bushing is 3/8" x 32NEF and accepts adjustment hardware 100054070, 100054071

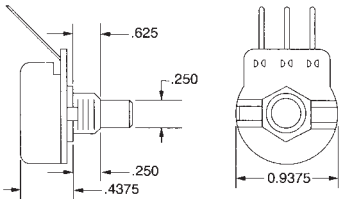

ADJUSTMENT HARDWARE LOCK NUT—100054070

Recommended for use with any adjustment or switch having a 3/8" x 32NEF bushing and 1/4" shaft. When the nut is tightened, the tapered center hole squeezes the shaft, preventing vibration mis-adjustment. Molded from black glass filled nylon with a UL 94V-0 rating.

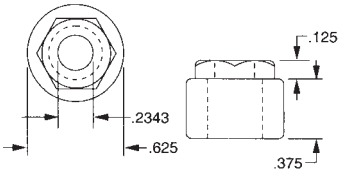

FLAT NUT—100054071

Recommended for use with any adjustment or switch having a 3/8" x 32NEF bushing and 1/4" shaft. Ideally suited for a 101026105 adjustment and 100054073 knob. This combination allows for no exposed metal parts required by UL and CSA. Molded from black, glass filled nylon with a UL 94V-0 rating.

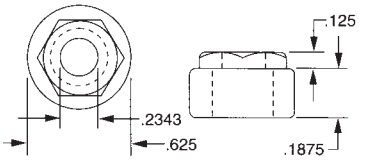

KNOB—100054073

Recommended for use with any adjustment or switch having a 1/4" shaft. This knob slips over the shaft and is secured in place by a #6-32 set screw. The knurled, mirror finished, black thermostat knob has a white pointer line for reference.

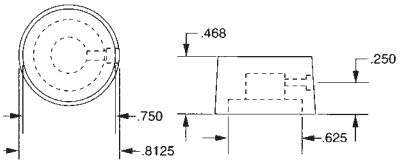

HOLD DOWN BRACKET—100054080

Recommended for use with ATC-Diversified Electronics devices having octal or magnal plug-in bases. Made of .040 plated steel. The bracket secures to the enclosure via four (4) corner screws and can be factory assembled to any device when ordered.

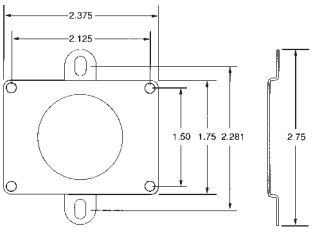

SADDLE CLAMP SCREW—100054226

The Saddle Clamp Screw can be used with all ATC-Diversified Electronics Style E surface mount enclosures.

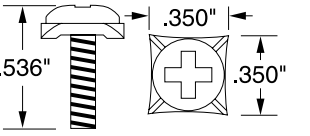

SPRING CLIP—100054275

Spring Clip. Set of 2. Can only be used with the PF083A socket.

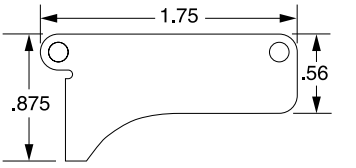

BRKT-A- 100054330

Panel mount bracket for style A enclosure