Precision Gear Technology Catalog

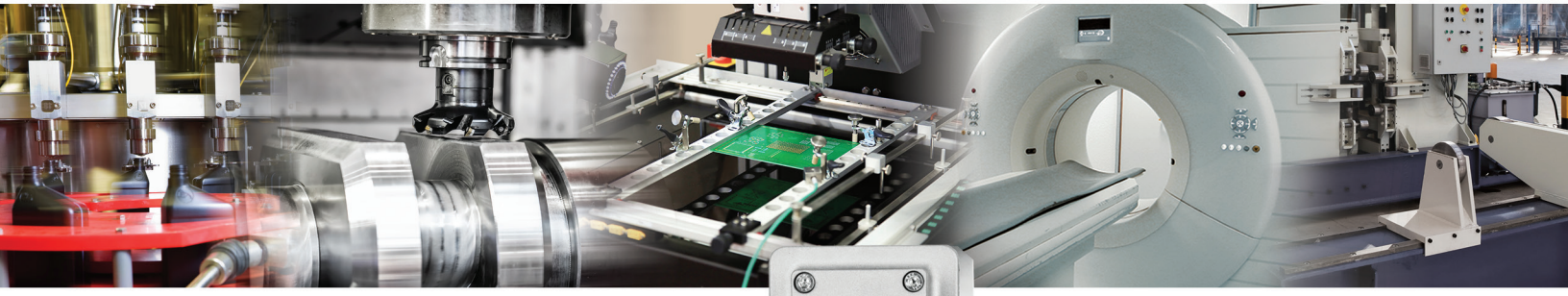

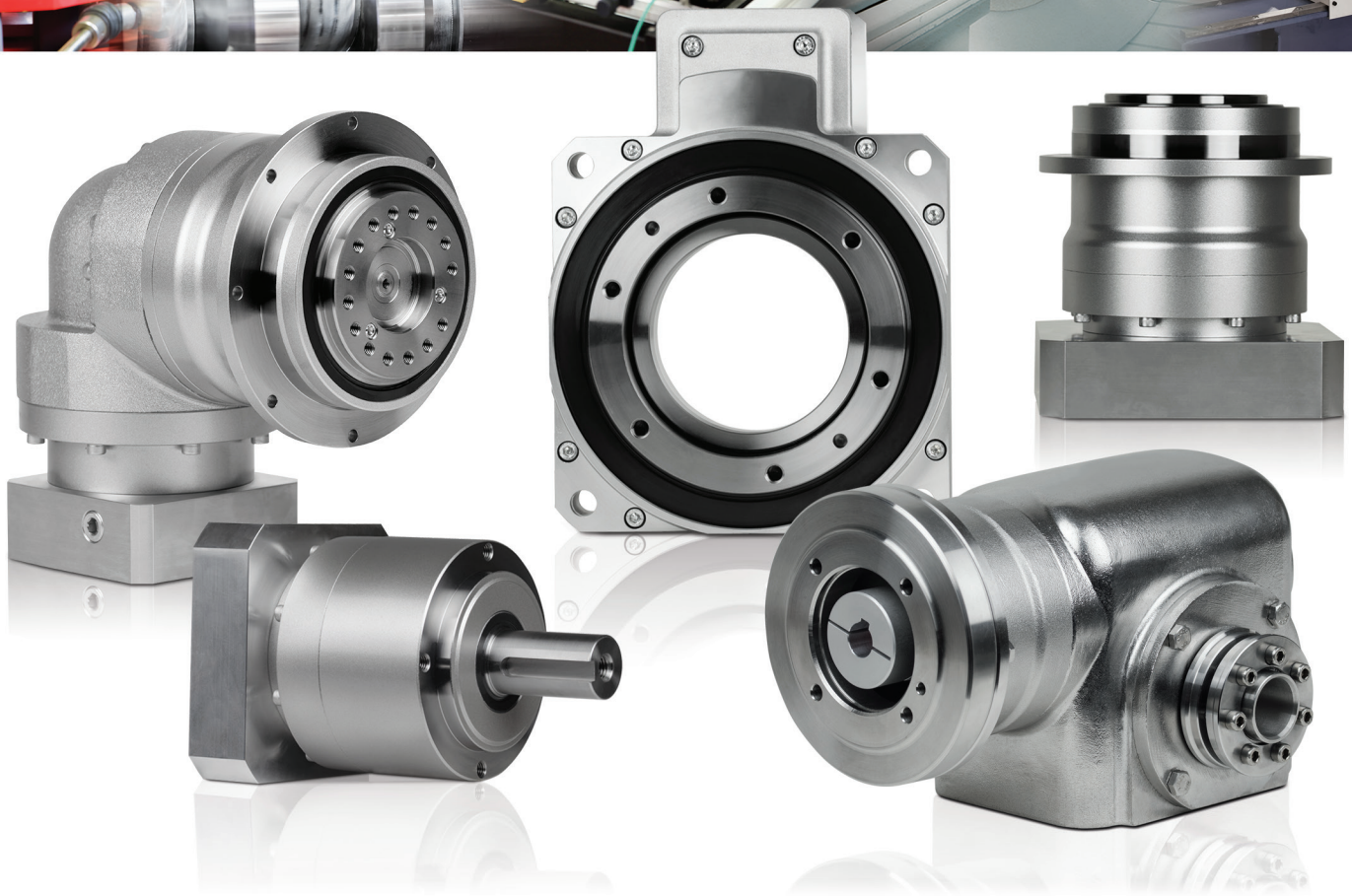

NIDEC DRIVE TECHNOLOGY CORPORATION

Letter from the President

The Nidec Drive Technology Corporation was originally founded in Kyoto Japan in 1952. Since our inception, we have made every possible effort to improve our manufacturing skill and capabilities, including the advancement of power transmission products to support new technologies and markets. Nidec DTC initially established an industry-wide leadership position in the area of mechanical variable speed drives. We are very proud of our storied past with mechanical drive technology, through which Nidec DTC helped contribute to the growth of the emerging industries that are now the cornerstone of our world economy today.

Over time, within the field of power transmission engineering, Nidec DTC has maintained the highest level of skill and production quality throughout the industry. We have earned a reputation as a long term dependable partner to our customers, and this solid reputation is firmly supported by the many industrial awards we hold, such as the Japanese Machinery Society Award, and Deming Award, among others.

Today, the growing global market for motion control has driven us to continuously develop products that provide the highest level of accuracy, reliability and value for our customers. We are technical experts across all of the various gear technologies we offer, and are the only company in the world producing such a wide range of product. Our Precision Gear Technology Catalog provides in-depth technical detail for our planetary, worm, cycloidal and rotary index table products.

Nidec DTC promises to continue to provide high precision power transmission products at unmatched value, which solve the new requirements of our customer base and allow them to be competitive in an increasingly tough global market. Within our company, we have coined this promise as "Enduring Process of Nidec DTC" - a pledge by our employees to approach all of their day-to-day work activities with full effort, full dedication, and full energy to support the evolving needs of our customers.

Your continued support and loyal patronage to our company is highly appreciated. Thank you for your time.

Best Regards,
President
T. Nishimoto

Table of contents

Inline Planetary Gearboxes

Right-angle Worm Gearboxes

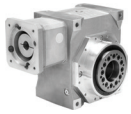

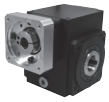

Right-angle Planetary Gearboxes

Rotary Index Tables

Cycloidal Gearboxes

NIDEC Corporation

With annual sales exceeding $11 Billion, the NIDEC Corporation is the world's largest manufacturer of brushless DC motors. NIDEC has operations in 40 countries through 297 group companies. Founded in 1973 by current Chairman of the Board and CEO, Shigenobu Nagamori, the NIDEC Corporation has built out a portfolio of motor technologies that span all industries and impact us in our everyday lives. NIDEC is making significant contributions to energy savings by developing and manufacturing highly efficient motor and drive technologies—technologies that keep the world moving forward.

Corporate Headquarters
Kyoto, Japan

Share Listing
Tokyo Nikkei Stock Exchange

Bond Rating
JCR: A+
R&I: A+

The NIDEC Group umbrella includes over 200 corporate subsidiaries that span the globe. More than 100,000 employees are supplying products and services to customers every day, in over 150 countries. The NIDEC Group companies are categorized into the following complementary business segments:

Sales by Product Group (FY2019)

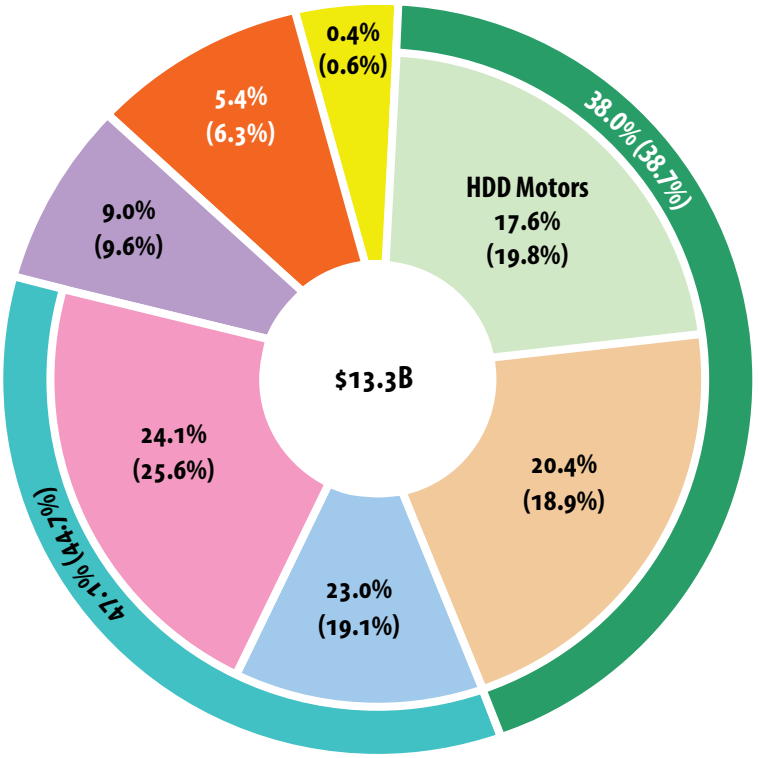

Automotive, Appliance, Commercial & Industrial Products
Motors for automobiles, home electronic appliances and industrial equipment

Small Precision Motors

HDD Motors

Other Small Motors
Optical disk drive motors, OA equipment motors, polygon scanners, MPU cooling fans, game machine fans, PC/communications fans, home appliance fans, automobile fans, vibration motors, brush motors, stepping motors, actuator units

Auto
Vibration motors, brush motors, stepping motors

Appliance Commercial Industrial
Game machine consoles, MPU cooling fans, PC/communications devices, home appliances, automobiles

Machinery:
Industrial robots, card readers, circuit board testers, high-speed press machines, chip mounters, measuring equipment, power transmission equipment, factory automation systems

Electronic & Optical Components:
Camera shutters, switches, trimmer potentiometers, precision plastic mold products

Others:
Logistics and services, musical instruments

The NIDEC Group has numerous manufacturing operations across the globe, which allows them to maintain a leading global market share position across its primary focus areas. NIDEC invests a significant portion of its yearly revenue in R&D in order to remain in the forefront of precision motor and drive technology. NIDEC believes strongly in education and established its own Institute for Industrial Science in 2016.

The NIDEC Corporation continues to expand its product portfolio in various motor technologies and has maintained its leadership position through aggressive product development and global acquisitions. The corporate slogan – **All for Dreams** – coined by founder Shigenobu Nagamori himself, epitomizes the NIDEC Group spirit and the promise to continue to deliver on the high value products and technologies that make our dreams possible.

We begin with dreams.
Dreams drive our motivation.
Dreams are our future.
The world's dreams, people's dreams, our dreams.
Our passion creates ideas that make dreams come alive.
Technology and products that were only dreams become reality.
All for dreams
Dreams challenge and the Nidec-Group
will continue to meet the challenge.
For the world's tomorrow,
we will develop the world's first technologies and provide the world's best products. We will continue our part in creating a better society.

Nidec Drive Technology Corporation

Nidec Drive Technology Corporation has established itself as the leading supplier of precision gearing solutions to the industrial automation marketplace. Since 1952, when we introduced the world's first mechanical variable speed drive, Nidec DTC has expanded into a diverse manufacturer of high precision power transmission systems for highly dynamic motion control applications.

In 1994, SHIMPO was acquired by the NIDEC Corporation and became formally known as Nidec DTC. Nidec Drive Technology began to focus on accelerating production volumes as the global market for motion control and mechatronics grew at an accelerated rate. We saw a unique opportunity to supply our customer base with the highest variety of transmission technologies, which brought forward strain wave, index table and worm gear products to complement our existing portfolio of planetary and cycloidal gearheads. The result for our customers was a single source drive solutions supplier.

Today, our company is shipping over 100,000 gearheads per month out of our manufacturing plants in Kyoto and Shanghai. Our products are used in robotics, machine tools, food packaging, printing, pulp & paper, material handling, medical, semiconductor and aerospace related systems. Our diverse product portfolio, state-of-the-art equipment, engineering know-how and manufacturing scale allow our customers to compete and expand their businesses globally. Our aim is to continue to innovate and provide the highest quality, best-in-class products and services for our customer base.

Sales and Distribution Network

Nidec DTC is committed to being a world class partner for our customers. To support the needs of a constantly expanding and evolving global economy, we continue to invest heavily in extending the footprint of our support network, distribution channels and manufacturing capabilities. Our customers know our products will always be supported, no matter where they're shipped.

We utilize the latest manufacturing techniques, equipment technology and inventory management systems to ensure our products to get market fast. In addition to our primary manufacturing and assembly facilities in Japan, China and the US, we have over 30 stocking points throughout the Americas, Asia-Pacific and Europe. We leverage our broad scale but rely on these local regions to intimately serve the needs of our customers in an increasingly competitive environment. This guarantees a high level of flexibility for various gearbox adaptations and the fastest delivery times in the industry.

Nidec DTC offers worldwide support with application assistance, installation and start-up, troubleshooting and repair as well as phone support and internet tools. Our footprint allows us to handle multi-national projects with distributed design and build locations, helping equipment manufacturers speed up their time to market. Whether the need is for emergency service or international project coordination, Nidec DTC is a company you can rely on.

Nidec Drive Technology Corporation has grown to over 2,400 employees strong with a presence across five continents. Our engineering staff, customer support team and distribution partners undergo rigorous product training to ensure the quickest response to our customers' needs.

Global Connections

Americas

- ✸ Glendale Heights, IL
- Querétaro
- São Paulo

Europe

- Dettenhausen

Asia-Pacific

- ✸ Kyoto (Headquarters)
- Beijing
- Shanghai
- Pinghu
- Xianggang
- Seoul
- Taiwan
- Singapore
- Bangalore

Total Quality Management

The spirit of challenge is basic to the Nidec Drive Technology Corporation culture, influencing all aspects of product development, manufacturing and customer satisfaction. The practice of challenging each individual in our organization has helped drive innovation and foster an environment of continuous improvement. We place quality and reliability at the forefront of everything we do—from design, to production, to service. We refuse to cut corners and continue to set standards within our industry.

In 1969 Nidec DTC received The Deming Prize for our outstanding quality control based on the Total Quality Management (TQM) Method. Since that time, Nidec DTC's desire to deliver top notch products has steered us towards internalizing a unique statistical quality control procedure across all departments and functional teams. Our rigid quality control program and Kaizen philosophy influences all aspects of product development, raw material procurement, production, logistics and post-sales support. By instilling the Deming Cycle – ***Plan, Do, Check, Act*** – deep within our company culture, Nidec DTC develops and manufactures products that exceed our customers' specifications and requirements across all criteria when benchmarked against our competition.

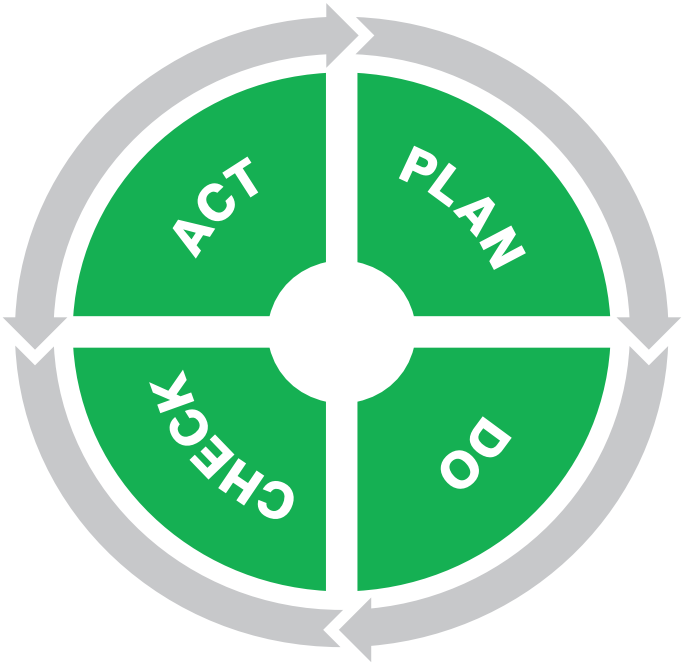

Nidec Drive Technology constantly measures the reliability of new technologies, consistency of raw materials, and failures rates of all components within our products to ensure new and existing designs exceed the performance benchmarks we put in place. For example, we utilize the highest quality case hardened carbon steel when designing gears for optimum safety under high pressures and bending. Our gears are carburized and also undergo a proprietary secondary finishing operation after heat treatment to improve accuracy and surface finish, which protects against wear and reduces noise during operation. Our bearings are only sourced from leading manufacturers in Japan.

What truly sets us apart is our testing. No other manufacturer in our industry puts their products through such strenuous tests as

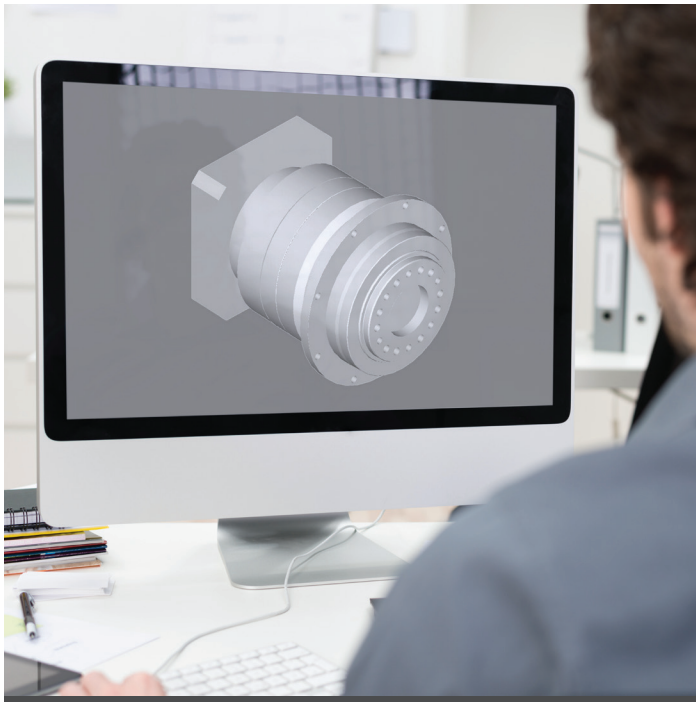

STATE-OF-THE-ART TECHNOLOGY

Nidec DTC. We conduct several tests during development, most of which are done at 10 million cycles. We run accelerated endurance tests at full load, in a variety of environmental conditions, to demonstrate that our calculated safety factors are achieved in reality. Our gearheads are 100% exit-tested and critical factors such as backlash, noise, vibration and no-load running torque are recorded and serialized for each of the million plus products we ship yearly. From bearings, to seals, to castings, our quality inspections at material point of entry are as stringent as any testing done throughout our manufacturing process. We can setup and execute unique bench tests to mimic our customers' motion profiles and operating conditions—making us a partner from prototyping through production.

Our quality management system has been certified according to ISO 9001:2008 and ISO 14001:2004 standards. Copies of these certificates for our manufacturing facilities can be found on our website. Nidec DTC regularly undergoes strict quality audits. We take this process very seriously, realizing we must maintain these standards in order to build brand awareness and establish credibility globally.

DNV
ISO 9001
ISO 14001

Nidec Drive Technology will continue to challenge itself and our individual employees while striving for greater levels of product quality. It is a daunting challenge, as the incremental gains in quality become smaller and much harder to achieve. However, the challenge is ingrained within the spirit of each Nidec DTC employee. This ***"Do It Now, Complete The Job and Follow Through"*** Attitude exhibited by our employees helps create superior products for the global marketplace.

Manufacturing Strength and Capabilities

Nidec Drive Technology Corporation's state-of-the-art manufacturing facilities are located in Kyoto, Japan and Shanghai, China. Both facilities have undergone significant expansions over the past few years, bringing our combined monthly output to over 100,000 units. These facilities house several hundred gear fabrication machines, CNC machines and test equipment. Gear cutting, hobbing, shaping, milling, EDM, broaching, heat treatment and secondary finishing processes are all employed under one roof, giving us complete control over the entire manufacturing process.

Nidec DTC utilizes the latest robotics and automation equipment, allowing for fast machine tool changeover times, increased productivity, increased safety, reduced labor cost and reduced defect rates. Automated storage and retrieval systems and automated guided vehicles are used to ensure the proper parts get to where they need to be, quickly.

Our company thrives on challenging designs that often daunt others. These include extremely accurate products with <1 arc-min backlash, gearboxes designed to withstand extreme temperatures, units customized to meet certain weight targets, special lubrication and unique output shafts for streamlined connection to the

customer equipment. Our cleanroom facility houses special product assembly for medical, semiconductor, aerospace and other mission-critical customer applications.

We strongly believe and have proved in practice that providing a high quality product can not only lower our own manufacturing costs, but can allow our customers to reduce their costs and compete globally. Lean processes, rigorous inventory control, modular design, fewer returns, reduced waste and negligible repair translate to reduced costs that enable Nidec DTC to offer a superior, cost-effective product.

We have developed a core competency at quickly developing products and applying our know-how to efficiently scale-up a manufacturing process from prototype testing to large volume production. We promise to leverage this intrinsic skill set in order to continue to push the product development envelope and provide the greatest value to our customers. If you are a new customer considering our products for the first time, we strongly encourage and welcome a visit to any of our manufacturing facilities to see our capabilities first-hand.

North American Assembly Operations

Nidec Drive Technology Corporation services the North American market through our Headquarters and 50,000 sq. ft. assembly facility in Glendale Heights, Illinois. This facility houses our sales, design and application engineering and customer support teams. We assemble over 75% of our products in North America, most of which can ship within 1 week. Motor adapters are readily available for easy mounting to any servomotor manufacturers' models. With over $3MM in inventory, next day delivery is available for several common models and for emergency replacements for equipment in the field.

We are highly flexible and can fulfill custom requirements such as special output shafts dimensions, coatings, lubrication, materials of construction and integrated product assemblies. Our products are 100% exit-tested to ensure all performance specifications are met, giving our customers security and peace of mind. Each gearbox is inspected for noise, backlash, vibration, no-load running torque, concentricity and input shaft slipping using the latest equipment and methods. Our 5 Year Standard Warranty is our way of demonstrating Nidec DTC's commitment to quality and durability over the long term.

Local, personal support is a phone call or email away. Each Nidec DTC customer has a dedicated team of customer service and technical support professionals, on-standby to assist with pricing, delivery, sizing, repairs, installation support or other needs. We strive to deliver the highest quality, value and service in the industry.

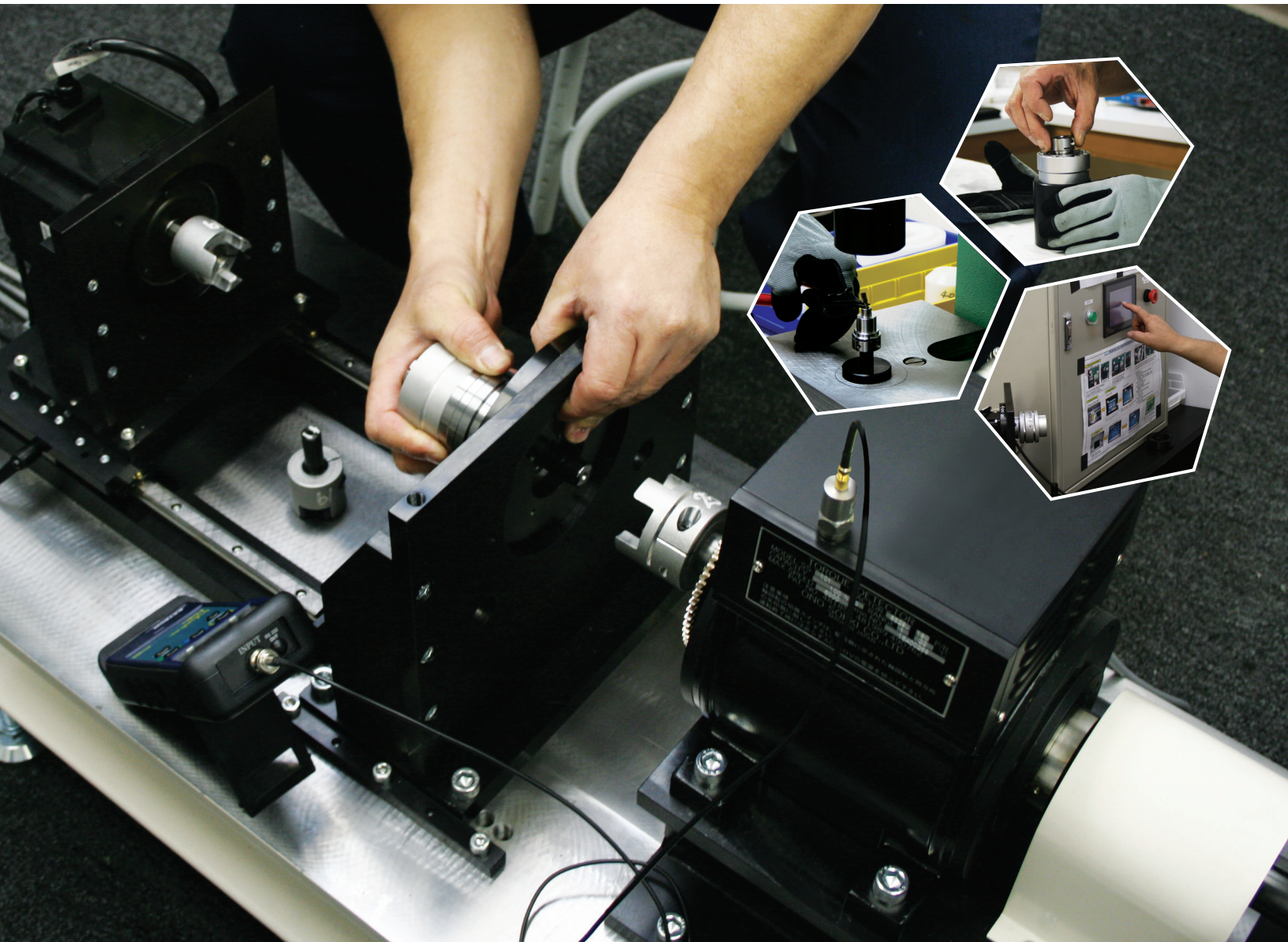

Unmatched Product Availability

Whether our customer is an OEM bringing a new product to market or an end user maintaining equipment in their manufacturing plant, down time is not an option. Our manufacturing, local assembly, inventory and distribution process ensures seamless communication between all parties and the fastest turnaround times. Put us to the test and see how we can save you time and money.

Solutions for Industry

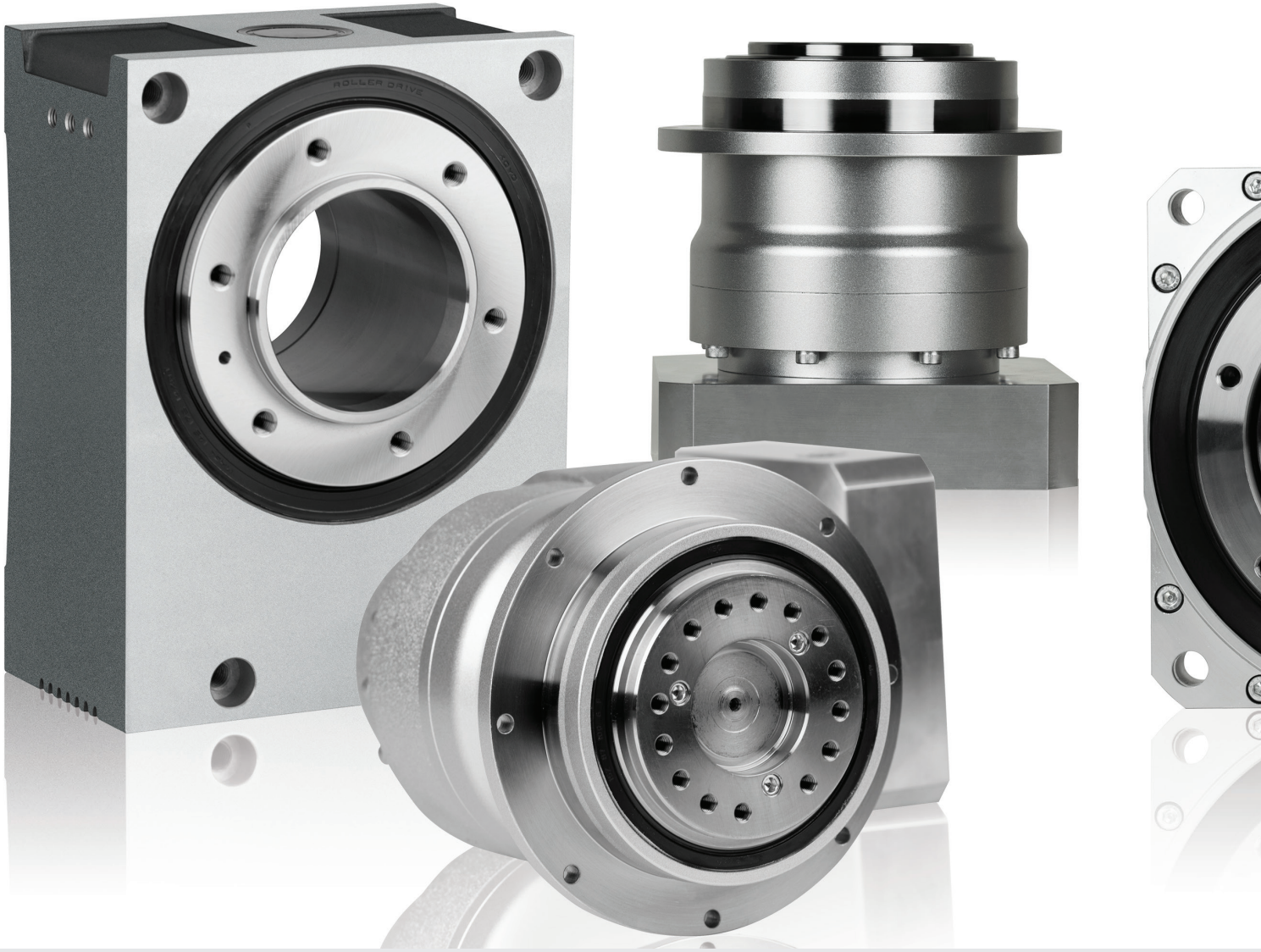

Machine Tool and Metal Forming

A robust portfolio of planetary, cycloidal, strain wave and rotary index table products to drive every axis of your machine. We offer accuracies down to the arc-second, which enable our customers to make the most accurate cuts. Our pancake gear units are excellent solutions when space savings is of concern.

Assembly and Test Automation

Our wide range of technologies give custom machine builders design flexibility, all available from one source. Our servo-driven hollow shaft rotary indexers are often used in turn table applications, replacing legacy mechanical camming drives. Many products are available within 1-2 days, to accommodate project-based business.

Packaging and Filling

Our products can be customized with coatings and lubrication to meet various food grade and wash down requirements. Our EJS series is the ultimate hygienic solution for extreme environments. Cost-effective planetary and worm options are available for OEMs transitioning from mechanical to servo technology.

Material Handling

Nidec Drive Technology Corporation is the global leader in drive technology for the Automated Guided Vehicle (AGV) market. We supply compact, energy efficient solutions that are not only modular, but scalable. We have experience designing custom solutions that withstand tough environments and demanding loads.

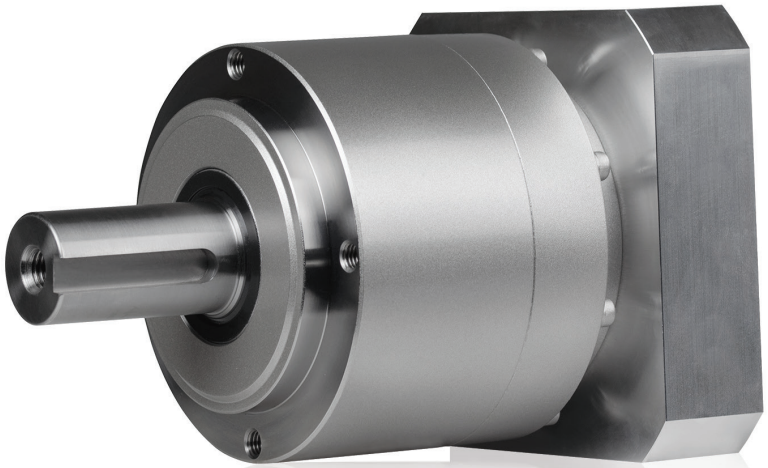

Printing and Converting

Our gear reducers are designed to minimize the heat generation and are therefore capable of operating at higher speeds, continuously. Operating at lower temperatures, our products act as a "heat sink", drawing heat from the servo motors, allowing them to run faster and longer.

Medical and Health Care Systems

We offer extremely accurate positioning characteristics and high quality gearheads that maintain a level of performance consistency required in medical applications. Our products are used across a gamut of applications, including diagnostic imaging, surgical robotics, exoskeleton systems and lab automation.

Robotics

NIDEC-SHIMPO is a leading supplier into the robotics industry. From 7th axis shuttle systems to end-of-arm tooling, we have solutions for every joint. Our strain wave gear component sets allow for optimized packaging, reduced weight and improved control. Both, standard products and custom engineered solutions are available.

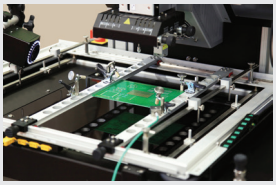

Semiconductor and Circuit

A broad offering of high precision, clean room friendly planetary, strain wave and cycloidal solutions that are preferable over belt drives and other reduction methods that can introduce contamination. Custom coatings and materials of construction are available as necessary for corrosive chamber environments and different clean room classifications.

Product Overview

					
Product Series		**VRSF**	**VRL**	**VRB**	**VRS**
Catalog Page		16	28	60	92
Axis of Orientation		Inline	Inline	Inline	Inline
Gear Technology		Helical planetary	Helical planetary	Helical planetary	Helical planetary
Frame Size	Smallest	B (60mm)	050	042	060
	Largest	E (170mm)	235	220	240
	Variety	4	7	7	7
Ratio	Minimum	3	3	3	3
	Maximum	81	100	100	100
	Variety	9	23	23	23
Output Mounting Style					
Solid keyed shaft, tapped holes		■	■		
Solid keyed shaft, through holes				■	■
Solid smooth shaft, tapped holes			■		
Solid smooth shaft, through holes				■	■
Flange output					
Hollow shaft					
Lubrication					
Grease		■	■	■	■
Oil					
Output Bearing Type					
Ball Bearing		■	■	■	
Tapered Roller Bearing					■
Cross Roller Bearing					
Performance Specification					
Radial Load		Standard	Standard	Standard	Excellent
Thrust Load		Standard	Standard	Standard	Excellent
Backlash Rating (arc-min)		≤ 15	≤ 5	≤ 3	≤ 3
Torsional Rigidity		Standard	Standard	Standard	Excellent
Efficiency		Excellent	Excellent	Excellent	Excellent

		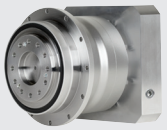			
Product Series		**VRT**	**ERH**	**NEV**	**EVL**
Catalog Page		124	446	160	180
Axis of Orientation		Inline	Inline	Right-angle	Right-angle
Gear Technology		Helical planetary	Cycloidal	Spiral bevel/Planetary	Spiral bevel/Planetary
Frame Size	Smallest	047	B (145mm)	B (60mm)	070
	Largest	285	F (230mm)	E (170mm)	235
	Variety	8	10	4	6
Ratio	Minimum	4	11	3	3
	Maximum	100	71	105	100
	Variety	20	7	7	23
Output Mounting Style					
Solid keyed shaft, tapped holes			■	■	■
Solid keyed shaft, through holes					
Solid smooth shaft, tapped holes					■
Solid smooth shaft, through holes					
Flange output		■			
Hollow shaft			■	■	
Lubrication					
Grease		■	■	■	■
Oil			■		
Output Bearing Type					
Ball Bearing		■	■	■	■
Tapered Roller Bearing		■	■		
Cross Roller Bearing					
Performance Specification					
Radial Load		Excellent	Standard	Standard	Standard
Thrust Load		Excellent	Standard	Standard	Standard
Backlash Rating (arc-min)		≤ 3	≤ 6	≤ 30	≤ 6-9
Torsional Rigidity		Excellent	Excellent	Standard	Standard
Efficiency		Excellent	Excellent	Excellent	Excellent

Product Overview

						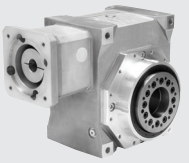
Product Series		**EVB**	**EVS**	**EVT**	**EJM**	**EJL**
Catalog Page		208	236	268	296	314
Axis of Orientation		Right-angle	Right-angle	Right-angle	Right-angle	Right-angle
Gear Technology		Spiral bevel/Planetary	Spiral bevel/Planetary	Spiral bevel/Planetary	Globoidal worm	Globoidal worm
Frame Size	Smallest	060	060	064	02	25
	Largest	220	240	255	09	200
	Variety	6	7	6	6	11
Ratio	Minimum	3	3	4	5	3.125
	Maximum	100	100	100	60	90
	Variety	23	23	20	10	13
Output Mounting Style						
Solid keyed shaft, tapped holes					■	■
Solid keyed shaft, through holes		■	■			
Solid smooth shaft, tapped holes						
Solid smooth shaft, through holes		■	■			
Flange output				■		■
Hollow shaft					■	■
Lubrication						
Grease		■	■	■		
Oil					■	■
Output Bearing Type						
Ball Bearing		■		■	■	
Tapered Roller Bearing			■	■		■
Cross Roller Bearing						
Performance Specification						
Radial Load		Standard	Excellent	Excellent	Standard	Excellent
Thrust Load		Standard	Excellent	Excellent	Standard	Excellent
Backlash Rating (arc-min)		≤ 4-7	≤ 4-7	≤ 4-7	≤ 12-40	≤ 0.5-15
Torsional Rigidity		Standard	Excellent	Excellent	Standard	Excellent
Efficiency		Excellent	Excellent	Excellent	Moderate	Excellent

			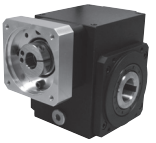			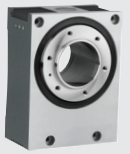
Product Series		**EJH**	**EJP**	**EJS**	**STH**	**STR**
Catalog Page		350	368	386	408	416
Axis of Orientation		Right-angle	Right-angle	Right-angle	Various	Various
Gear Technology		Globoidal worm	Globoidal worm	Globoidal worm	Planetary/hollow rotary	Globoidal cam
Frame Size	Smallest	15	38	39	070	040
	Largest	35	89	76	070	240
	Variety	5	5	5	1	7
Ratio	Minimum	5	5	5	12	15
	Maximum	60	60	60	400	2000
	Variety	13	13	10	14	24
Output Mounting Style						
Solid keyed shaft, tapped holes		■	■	■		
Solid smooth shaft, tapped holes						
Solid smooth shaft, tapped holes						
Solid smooth shaft, through holes						
Flange output		■	■		■	■
Hollow shaft		■	■	■	■	■
Lubrication						
Grease					■	■
Oil		■	■	■		
Output Bearing Type						
Ball Bearing						
Tapered Roller Bearing		■	■	■		
Cross Roller Bearing					■	■
Performance Specification						
Radial Load		Excellent	Excellent	Excellent	Standard	Excellent
Thrust Load		Excellent	Excellent	Excellent	Standard	Excellent
Backlash Rating (arc-min)		≤ 6-32	≤ 0-8	≤ 8-24	≤ 2-4	0
Torsional Rigidity		Standard	Standard	Standard	Standard	Excellent
Efficiency		Moderate	Moderate	Moderate	Excellent	Standard

VRSF SERIES

The intelligent, value engineered selection for lower duty cycle servo and stepper motor applications. The VRSF utilizes a light-weight aluminum frame, making it optimal for traveling axes and end of arm tooling systems. Helical cut gearing allows the VRSF to operate much quieter than the industry standard economy products which rely on spur gearing. The VRSF comes standard with 15 arc-minutes of backlash, but can also be configured to higher accuracy levels.

The VRSF is available in four frame sizes, putting out a peak output torque of 274Nm across 9 reduction ratios. The VRSF is the ideal choice for OEMs producing high volume machines where cost is critical, accuracy relatively important and duty cycle not overly extreme. The VRSF's aluminum body has made it a popular choice in medical, food packaging and other harsh environments. The VRSF can be fitted with a NEMA output flange, for standardized connection to customer equipment.

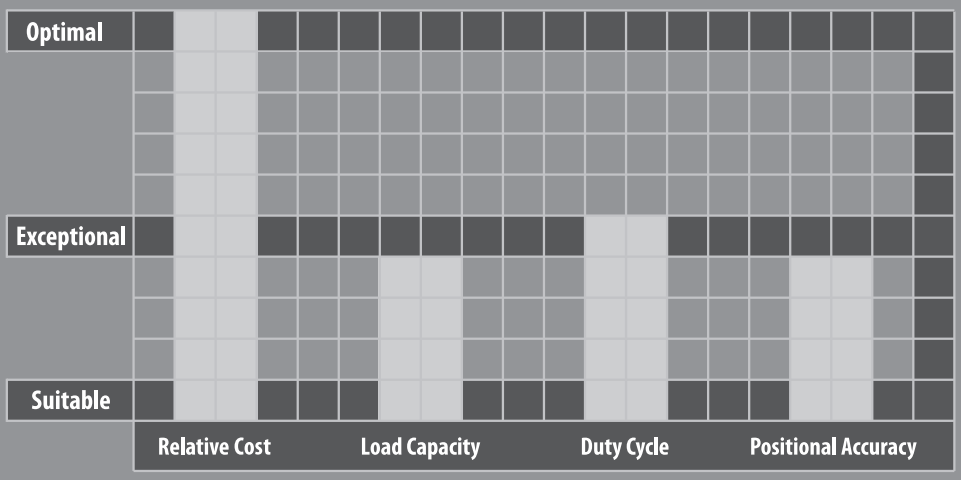

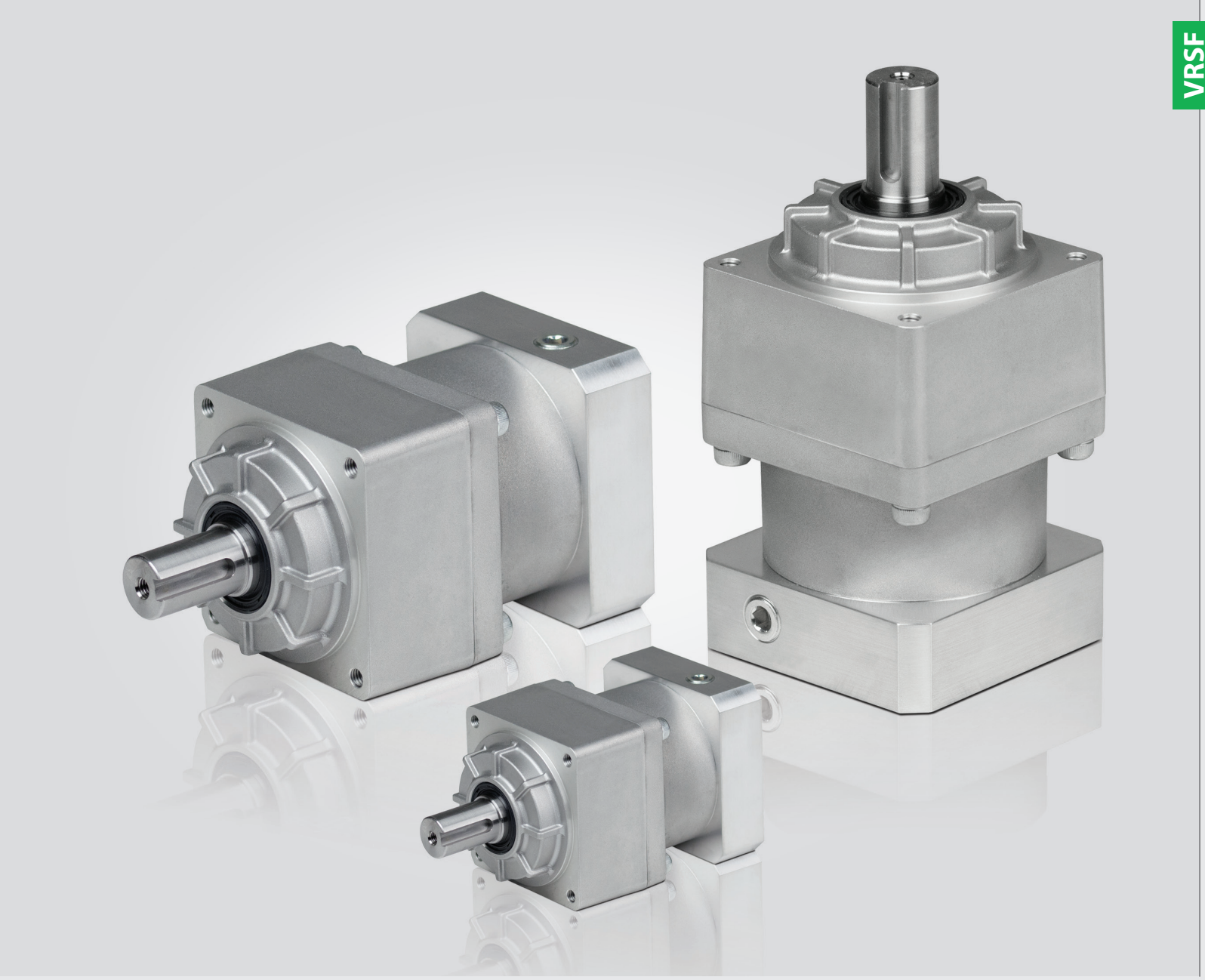

VRSF SERIES

- Value engineered solution for simple servo and stepper motor applications
- Quiet operation: Helical cut gears contribute to reduced vibration and noise
- Wide range of mounting adapters offer a simple, precise attachment to any motor
- Lightweight aluminum body reduces excess weight
- Aluminum body, combined with other wash-down features can be used in harsh environments
- Maintenance-free solution that is lubricated for life. High performance grease allows flexible mounting in any orientation

VRSF Series Features

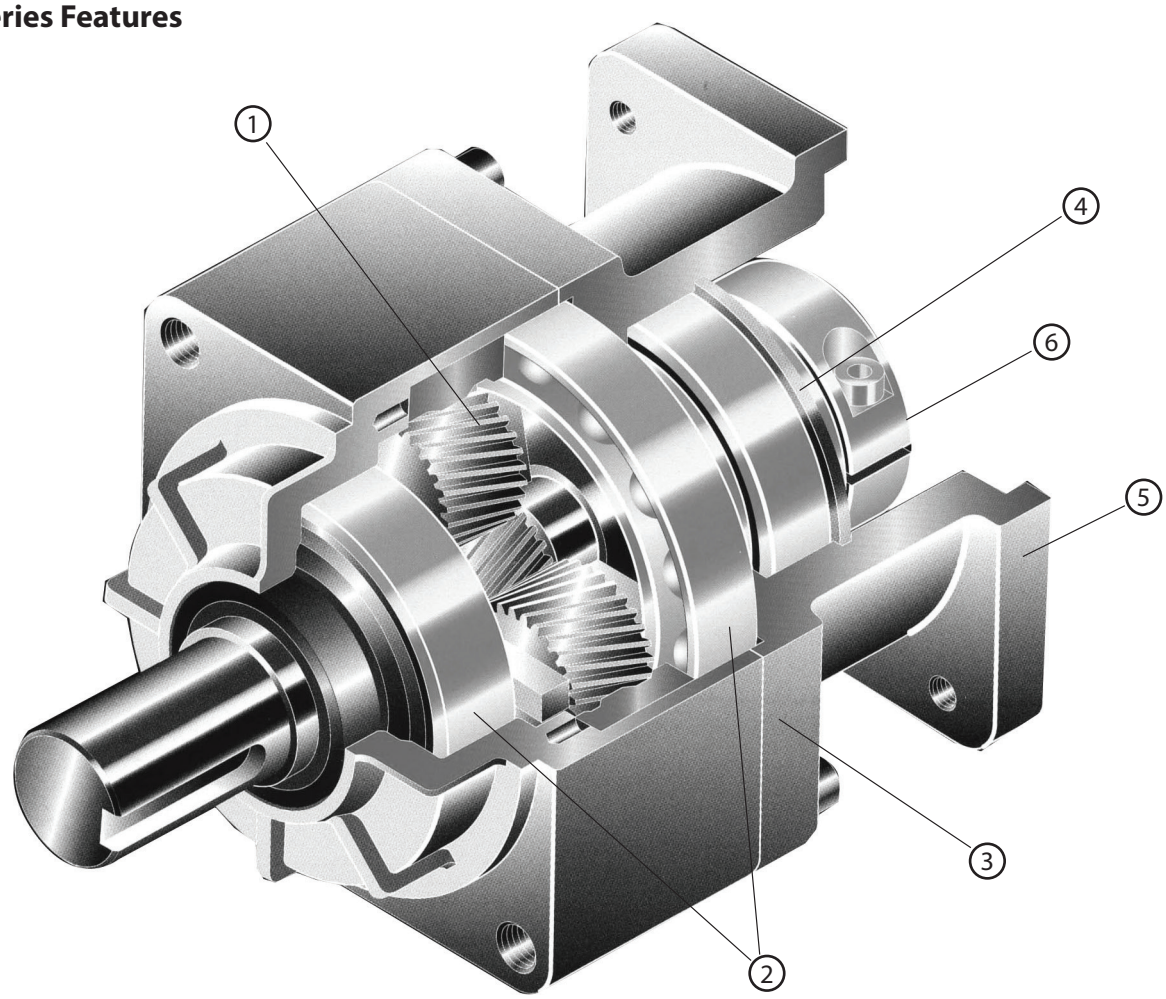

1. Carburized helical gears with proprietary secondary finishing process for higher accuracy and smooth, quiet operation
2. One piece output shaft and planet carrier with two bearings straddling the planet gears. Higher stiffness and safety factor, with guaranteed alignment of gearing
3. Aluminum body for a light weight solution, capable of withstanding corrosive environments
4. Input seal allows for IP65 ingress protection
5. Optimized mounting system with active centering on motor pilot diameter guarantees alignment of motor. Motor can be installed in any orientation
6. True concentric clamping connection, optimized for your motor. Reduced inertia for dynamic performance and balanced for high speed operation

VRSF Series Model Code

VRSF - LB - 15 - C - 19HB16

- 19HB16 — Motor mounting code (*1)
- C — Frame size: B, C, D, E
- 15 — Ratio: 1-Stage: 3, 5, S9; 2-Stage: 15, 20, 25, 35, 45, 81
- LB — Backlash: No code: Standard (15 arc-min); LB: Low (5 arc-min)
- VRSF — Series

*1) Code varies depending on the motor. Use the selection tool link below to configure the code

Contact us for additional information or refer to our online gearhead selection tool.

Selection tool https://www.nidec-drivetechnology.co.jp/selection/all/

VRSF B-Frame 1-Stage and 2-Stage Specifications

Frame Size	**B**								
Stage	**1-Stage**					**2-Stage**			
Ratio	Units	Note	3	5	9	15	20	25	35
Nominal Output Torque	[Nm]	*1	3.43	2.84	2.35	4.02	5.00	6.27	3.84
Maximum Acceleration Torque	[Nm]	*2	10.3	8.53	7.25	12.2	15.0	19.0	11.5
Emergency Stop Torque	[Nm]	--	--	--	--	--	--	--	--
Nominal Input Speed	[rpm]	*3	3000			3000			
Maximum Input Speed	[rpm]	*4	5000			5000			
No Load Running Torque	[Nm]	*5	0.119			0.048			
Permitted Radial Load	[N]	*6	392	490	588	784	804	882	882
Permitted Axial Load	[N]	*7	196	245	294	392	402	441	441
Maximum Radial Load	[N]	*8	882N			882N			
Maximum Axial Load	[N]	*9	441N			441N			
Moment of Inertia (≤Ø 8)	[kgcm2]	--	0.081	0.059	0.052	0.057	0.056	0.056	0.052
Moment of Inertia (≤Ø 14)	[kgcm2]	--	0.150	0.130	0.120	0.130	0.130	0.130	0.120
Efficiency	[%]	*10	90			85			
Torsional Rigidity	[Nm/arcmin]	*11	0.8			0.8			
Backlash (Standard)	[Arc-min]	--	≤ 15			≤ 15			
Backlash (Low)	[Arc-min]	--	≤ 10			≤ 10			
Backlash (Precision)	[Arc-min]	--	≤ 3			≤ 3			
Noise Level	[dB]	*12	≤ 72			≤ 65			
Protection Class	--	*13	IP65			IP65			
Ambient Temperature	[°C]	--	0-40			0-40			
Permitted Housing Temperature	[°C]	--	90			90			
Weight (≤Ø 8)	[kg]	*14	0.58			0.75			
Weight (≤Ø 14)	[kg]	*14	0.7			0.86			

*1) At nominal input speed, service life is 20,000 hours
*2) The maximum torque when starting or stopping operation
*3) The average input speed
*4) The maximum intermittent input speed
*5) Torque at no load applied to the input shaft at nominal input speed
*6) At this load and nominal input speed, service life will be 20,000 hours. (The radial load applied to the output side shaft center)
*7) At this load and nominal input speed, service life will be 20,000 hours. (The axial load applied to the output side bearing)
*8) The maximum radial load that the gearbox can accept
*9) The maximum axial load that the gearbox can accept
*10) The efficiency at the nominal output torque rating
*11) This does not include lost motion
*12) Contact Nidec Drive Technology for the testing conditions and environment
*13) IP65 (wash-down) is available as an option. Contact Nidec Drive Technology for more details
*14) The weight may vary slightly between models

VRSF C-Frame 1-Stage and 2-Stage Specifications

Frame Size	**C**										
Stage	**1-Stage**					**2-Stage**					
Ratio	Units	Note	3	5	9	15	20	25	35	45	81
Nominal Output Torque	[Nm]	*1	6.86	11.5	9.7	16.2	21.1	26.4	15.5	9.5	9.7
Maximum Acceleration Torque	[Nm]	*2	20.6	34.3	29.2	48.6	63.3	79.2	46.6	28.6	29.2
Emergency Stop Torque	[Nm]	--	--	--	--	--	--	--	--	--	--
Nominal Input Speed	[rpm]	*3	3000			3000					
Maximum Input Speed	[rpm]	*4	5000			5000					
No Load Running Torque	[Nm]	*5	0.29			0.19					
Permitted Radial Load	[N]	*6	784	980	1180	1470	1570	1670	1670	1670	1670
Permitted Axial Load	[N]	*7	392	490	588	735	785	833	833	833	833
Maximum Radial Load	[N]	*8	1670N			1670N					
Maximum Axial Load	[N]	*9	833N			833N					
Moment of Inertia (≤Ø 8)	[kgcm2]	--	--	--	--	0.077	0.070	0.062	0.055	0.053	0.052
Moment of Inertia (≤Ø 14)	[kgcm2]	--	0.630	0.380	0.300	0.150	0.140	0.130	0.130	0.120	0.120
--	--	--	1.100	0.880	0.800	--	--	--	--	--	--
Efficiency	[%]	*10	90			85					
Torsional Rigidity	[Nm/arcmin]	*11	3			3					
Backlash (Standard)	[Arc-min]	--	≤ 15			≤ 15					
Backlash (Low)	[Arc-min]	--	≤ 5			≤ 5					
Backlash (Precision)	[Arc-min]	--	≤ 3			≤ 3					
Noise Level	[dB]	*12	≤ 72			≤ 65					
Protection Class	--	*13	IP 65			IP65					
Ambient Temperature	[°C]	--	0-40			0-40					
Permitted Housing Temperature	[°C]	--	90			90					
Weight (≤Ø 8)	[kg]	*14	--			1.8					
Weight (≤Ø 14)	[kg]	*14	1.8			1.9					
Weight (≤Ø 19)	--	*14	2.2			--					

*1) At nominal input speed, service life is 20,000 hours
*2) The maximum torque when starting or stopping operation
*3) The average input speed
*4) The maximum intermittent input speed
*5) Torque at no load applied to the input shaft at nominal input speed
*6) At this load and nominal input speed, service life will be 20,000 hours. (The radial load applied to the output side shaft center)
*7) At this load and nominal input speed, service life will be 20,000 hours. (The axial load applied to the output side bearing)
*8) The maximum radial load that the gearbox can accept
*9) The maximum axial load that the gearbox can accept
*10) The efficiency at the nominal output torque rating
*11) This does not include lost motion
*12) Contact Nidec Drive Technology for the testing conditions and environment
*13) IP65 (wash-down) is available as an option. Contact Nidec Drive Technology for more details
*14) The weight may vary slightly between models

VRSF D-Frame 1-Stage and 2-Stage Specifications

Frame Size	**D**										
Stage	**1-Stage**					**2-Stage**					
Ratio	Units	Note	3	5	9	15	20	25	35	45	81
Nominal Output Torque	[Nm]	*1	18.3	23.5	18.2	30.4	40.6	50.7	37	28.3	17.8
Maximum Acceleration Torque	[Nm]	*2	54.9	70.6	54.7	91.2	122	152	111	85.2	53.5
Emergency Stop Torque	[Nm]	--	--	--	--	--	--	--	--	--	--
Nominal Input Speed	[rpm]	*3	3000			3000					
Maximum Input Speed	[rpm]	*4	5000			5000					
No Load Running Torque	[Nm]	*5	0.51			0.26					
Permitted Radial Load	[N]	*6	882	1080	1470	1760	1910	2060	2060	2060	2060
Permitted Axial Load	[N]	*7	441	539	735	882	955	1030	1030	1030	1030
Maximum Radial Load	[N]	*8	2060N			2060N					
Maximum Axial Load	[N]	*9	1030N			1030N					
Moment of Inertia (≤Ø 8)	[kgcm2]	--	--	--	--	--	--	--	--	--	0.10
Moment of Inertia (≤Ø 14)	[kgcm2]	--	1.30	0.59	0.38	0.37	0.35	0.34	0.30	0.29	0.29
Moment of Inertia (≤Ø 19)	[kgcm2]	--	1.80	1.10	0.90	0.86	0.84	0.83	0.79	0.78	0.77
Moment of Inertia (≤Ø 28)	[kgcm2]	--	3.60	2.90	2.70	2.70	2.70	2.70	--	--	--
Efficiency	[%]	*10	90			85					
Torsional Rigidity	[Nm/arcmin]	*11	6			6					
Backlash (Standard)	[Arc-min]	--	≤ 15			≤ 15					
Backlash (Low)	[Arc-min]	--	≤ 5			≤ 5					
Backlash (Precision)	[Arc-min]	--	≤ 3			≤ 3					
Noise Level	[dB]	*12	≤ 72			≤ 65					
Protection Class	--	*13	IP65			IP65					
Ambient Temperature	[°C]	--	0-40			0-40					
Permitted Housing Temperature	[°C]	--	90			90					
Weight (≤Ø 8)	[kg]	*14	--			2.8					
Weight (≤Ø 14)	[kg]	*14	2.8			3.3					
Weight (≤Ø 19)	[kg]	*14	3.2			3.7					
Weight (≤Ø 28)	[kg]	*14	4.0			4.8					

*1) At nominal input speed, service life is 20,000 hours
*2) The maximum torque when starting or stopping operation
*3) The average input speed
*4) The maximum intermittent input speed
*5) Torque at no load applied to the input shaft at nominal input speed
*6) At this load and nominal input speed, service life will be 20,000 hours. (The radial load applied to the output side shaft center)
*7) At this load and nominal input speed, service life will be 20,000 hours. (The axial load applied to the output side bearing)
*8) The maximum radial load that the gearbox can accept
*9) The maximum axial load that the gearbox can accept
*10) The efficiency at the nominal output torque rating
*11) This does not include lost motion
*12) Contact Nidec Drive Technology for the testing conditions and environment
*13) IP65 (wash-down) is available as an option. Contact Nidec Drive Technology for more details
*14) The weight may vary slightly between models

VRSF E-Frame 1-Stage and 2-Stage Specifications

Frame Size			**E**								
Stage			**1-Stage**			**2-Stage**					
Ratio	Units	Note	3	5	9	15	20	25	35	45	81
Nominal Output Torque	[Nm]	*1	44.1	56.8	73.5	91.4	78.4	65.4	71	91.3	43.3
Maximum Acceleration Torque	[Nm]	*2	132	171	221	274	235	196	213	274	130
Emergency Stop Torque	[Nm]	--	--	--	--	--	--	--	--	--	--
Nominal Input Speed	[rpm]	*3	3000			3000					
Maximum Input Speed	[rpm]	*4	5000			5000					
No Load Running Torque	[Nm]	*5	1.12			0.62					
Permitted Radial Load	[N]	*6	1370	1670	1960	2350	2500	2650	3430	3520	3530
Permitted Axial Load	[N]	*7	686	833	980	1180	1250	1320	1715	1760	1765
Maximum Radial Load	[N]	*8	3530N			3530N					
Maximum Axial Load	[N]	*9	1765N			1765N					
Moment of Inertia (≤Ø 8)	[kgcm2]	--	--	--	0.61	0.63	0.56	0.53	0.40	0.35	0.34
Moment of Inertia (≤Ø 14)	[kgcm2]	--	4.40	1.90	1.20	1.10	1.10	1.00	0.90	0.85	0.84
Moment of Inertia (≤Ø 19)	[kgcm2]	--	6.20	3.70	2.90	3.30	3.20	3.20	2.80	2.70	2.70
Moment of Inertia (≤Ø 28)	[kgcm2]	--	14.00	11.00	11.00	11.00	11.00	11.00	--	--	--
Efficiency	[%]	*10	90			85					
Torsional Rigidity	[Nm/arcmin]	*11	20			20					
Backlash (Standard)	[Arc-min]	--	≤ 15			≤ 15					
Backlash (Low)	[Arc-min]	--	≤ 5			≤ 5					
Backlash (Precision)	[Arc-min]	--	≤ 3			≤ 3					
Noise Level	[dB]	*12	≤ 75			≤ 75					
Protection Class	--	*13	IP65			IP65					
Ambient Temperature	[°C]	--	0-40			0-40					
Permitted Housing Temperature	[°C]	--	90			90					
Weight (≤Ø 8)	[kg]	*14	6.1			7.1					
Weight (≤Ø 14)	[kg]	*14	6.5			7.5					
Weight (≤Ø 19)	[kg]	*12	7.4			9.3					
Weight (≤Ø 28)	[kg]	*12	9.8			11.7					

*1) At nominal input speed, service life is 20,000 hours
*2) The maximum torque when starting or stopping operation
*3) The average input speed
*4) The maximum intermittent input speed
*5) Torque at no load applied to the input shaft at nominal input speed
*6) At this load and nominal input speed, service life will be 20,000 hours. (The radial load applied to the output side shaft center)
*7) At this load and nominal input speed, service life will be 20,000 hours. (The axial load applied to the output side bearing)
*8) The maximum radial load that the gearbox can accept
*9) The maximum axial load that the gearbox can accept
*10) The efficiency at the nominal output torque rating
*11) This does not include lost motion
*12) Contact Nidec Drive Technology for the testing conditions and environment
*13) IP65 (wash-down) is available as an option. Contact Nidec Drive Technology for more details
*14) The weight may vary slightly between models

VRSF B-Frame 1-Stage and 2-Stage Dimensions

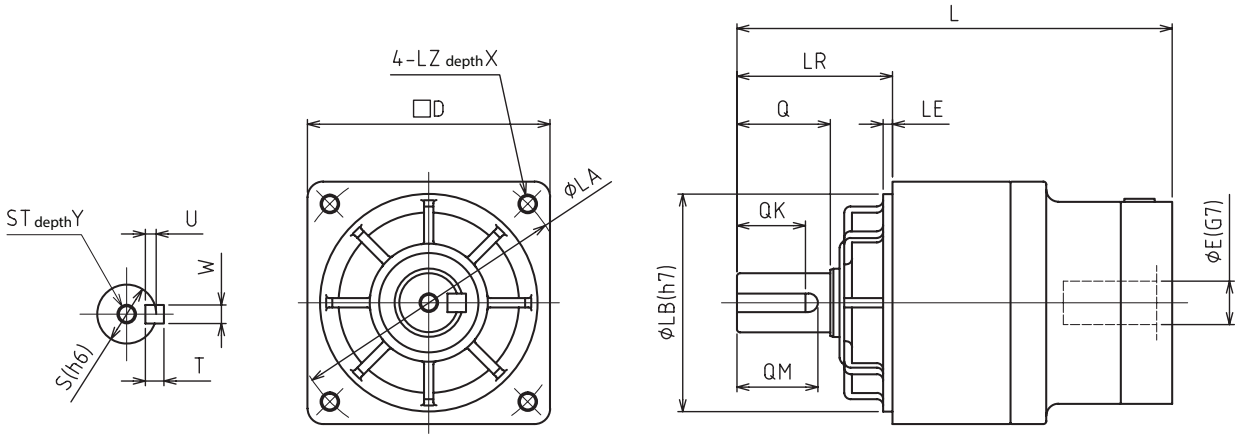

Frame Size	Ratio	Input Bore Dia. E	Dimensions															
			L	LR	S	ST	Y	Q	QM	QK	W×U	T	D	LB	LE	LA	LZ	X
B	1-Stage	≦ φ8	104.5	32	12	M5	10	20	18	16	4×2.5	4	52	50	3	60	M5	12
		≦φ14	107.5															
	2-Stage	≦φ8	115.5															
		≦φ14	118.5															

VRSF C-Frame 1-Stage and 2-Stage Dimensions

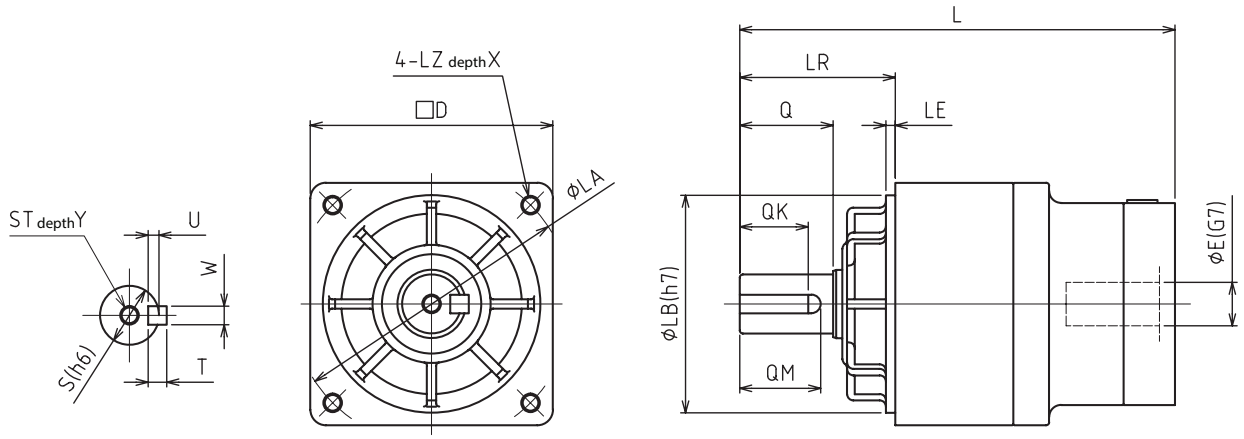

Frame Size	Ratio	Input Bore Dia. E	Dimensions															
			L	LR	S	ST	Y	Q	QM	QK	W×U	T	D	LB	LE	LA	LZ	X
C	1-Stage	≦ φ14	140	50	19	M6	12	30	26	22	6×3.5	6	78	70	3	90	M6	20
		≦ φ19	156															
	2-Stage	≦ φ8	147.5															
		≦ φ14	150.5															

VRSF D-Frame 1-Stage and 2-Stage Dimensions

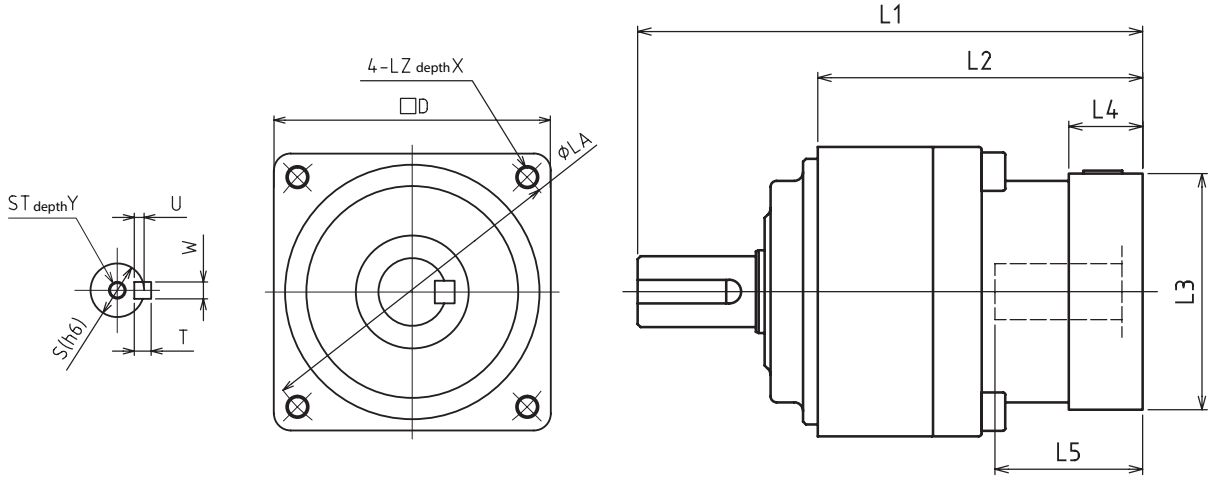

Frame Size	Ratio	Input Bore Dia. E	Dimensions															
			L	LR	S	ST	Y	Q	QM	QK	W×U	T	D	LB	LE	LA	LZ	X
D	1-Stage	≦φ14	155	61	24	M8	16	40	35	30	8×4	7	98	90	5	115	M8	20
		≦φ19	171															
		≦φ28	186															
	2-Stage	≦φ8	163															
		≦φ14	169															
		≦φ19	184															
		≦φ28	200.5															

VRSF E-Frame 1-Stage and 2-Stage Dimensions

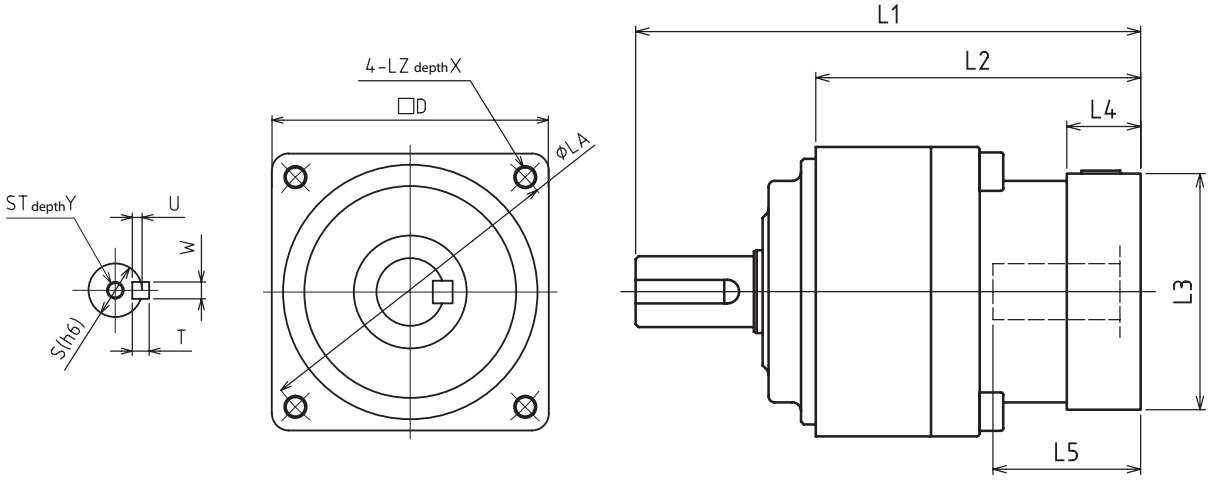

Frame Size	Ratio	Input Bore Dia. E	Dimensions															
			L	LR	S	ST	Y	Q	QM	QK	W×U	T	D	LB	LE	LA	LZ	X
E	1-Stage	≦φ14	189	75	32	M10	20	55	52	45	10×5	8	125	110	5	135	M10	20
		≦φ19	198.5															
		≦φ28	224															
		≦φ38	240															
	2-Stage	≦φ14	210															
		≦φ19	225															
		≦φ28	246.5															
		≦φ38	261.5															

VRL SERIES

The VRL series is the all-rounder in the planetary gearbox marketplace. With helical gearing, robust internal construction, smooth operation and high torque density, this product is truly best-in-class. 5 arc-min backlash allows the VRL to be applied to a wide range of applications where accuracy and dynamics are in play, but cost is of concern.

The VRL is an excellent choice for servo applications in packaging, handling and automation systems. A variety of standard wash down and food grade options are available, making it an attractive option for the toughest environments. We offer the broadest selection of frame sizes and ratios, giving our customers more flexibility than ever before. Industry standard mounting dimensions allow the VRL to be implemented in legacy machine designs, saving our customers valuable time.

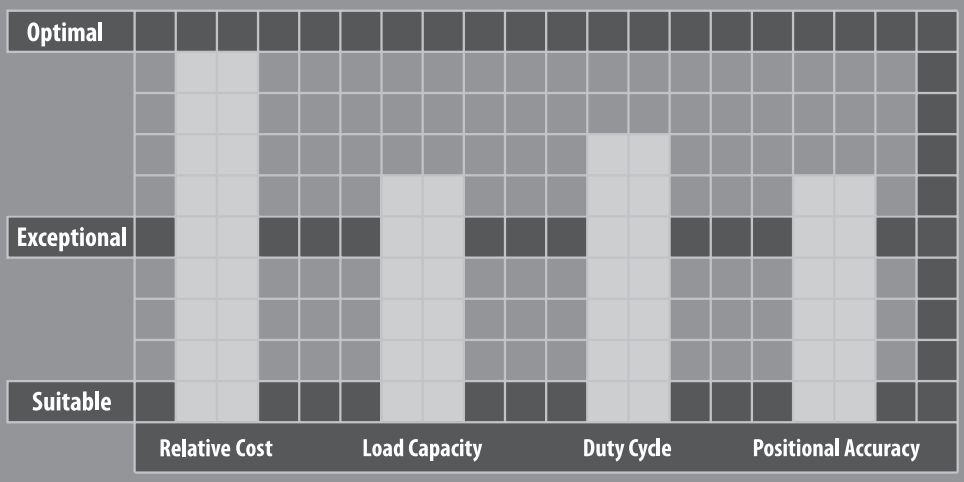

VRL SERIES

- The all-rounder for mid to high end motion control applications
- The widest range of frame sizes and ratios available in the market
- Best-In-class backlash (≤5 arc-min)
- Broad range of mounting adapters offer a simple, precise attachment to any motor
- Maintenance-free solution that is lubricated for life. High performance grease allows flexible mounting in any orientation
- Industry standard mounting dimensions
- Assembled in the USA, with immediate delivery

VRL Series Features

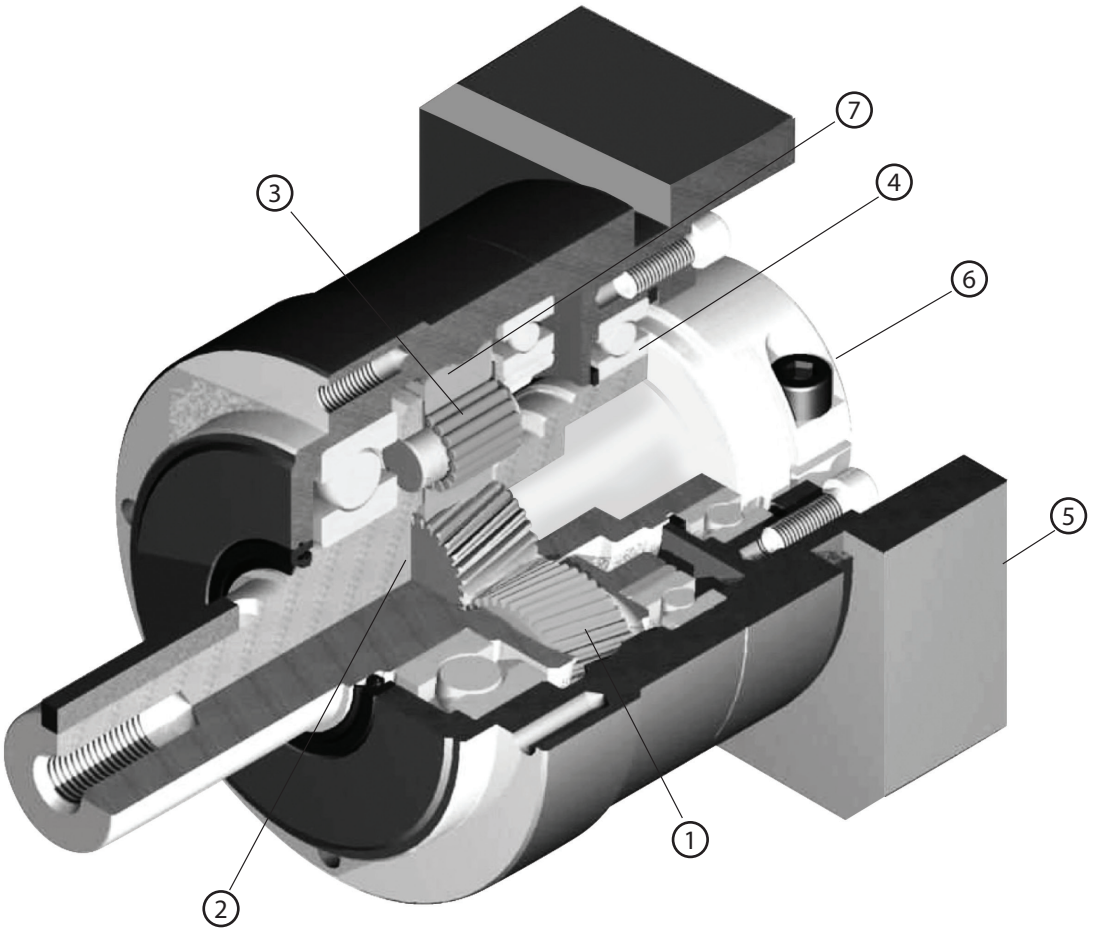

1. Carburized helical gears with proprietary secondary finishing process for higher accuracy and smooth, quiet operation. 40% higher tooth surface area than the industry standard
2. One piece output shaft and planet carrier with two bearings straddling the planet gears. Higher stiffness, torque capacity and safety factor, with guaranteed alignment of gearing
3. Uncaged needle roller bearings provide excellent torque density and torsional rigidity. 43% larger bearing surface area compared to the rest of the industry
4. Unique labyrinth input seal design greatly reduces heat and increases system efficiency. IP65 protection is available for wash down applications
5. Optimized mounting system with active centering on motor pilot diameter guarantees alignment of motor. Motor can be installed in any orientation
6. True concentric motor shaft clamping connection, optimized for your specific motor. Reduced inertia for dynamic performance and balanced for high speed operation
7. Ring gear machined directly into the housing, not welded or pressed in. Provides greater concentricity and elimination of speed fluctuation

VRL Series Model Code

VRL – 090 C – 7 – K 5 – 19HB16

- **19HB16** — Motor mounting code (*1)
- **5** — Backlash: ≤5 arc-min
- **K** — Output mounting style: K: Keyed Shaft / S: Smooth shaft
- **7** — Ratio: 1-Stage: 3, 4, 5, 6, 7, 8, 9, 10 / 2-Stage: 15, 16, 20, 25, 28, 30, 35, 40, 45, 50, 60, 70, 80, 90, 100
- **C** — Design version
- **090** — Frame size: 050, 070, 090, 120, 155, 205, 235
- **VRL** — Series

*1) Motor mounting code varies depending on the motor. Use the selection tool link below to configure the code.

Contact us for additional information or refer to our online gearhead selection tool.

Selection tool https://www.nidec-drivetechnology.co.jp/selection/all/

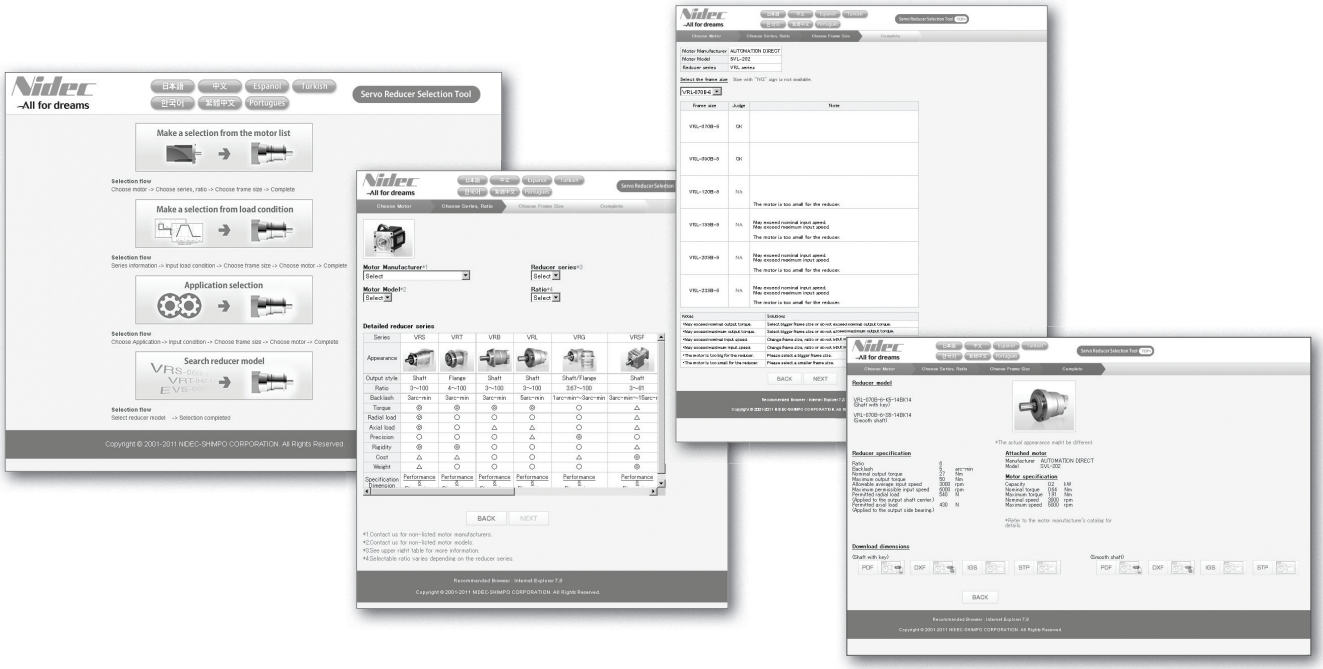

VRL 050 1-Stage Specifications

Frame Size	**050**									
Ratio	Units	Note	3	4	5	6	7	8	9	10
Nominal Output Torque	[Nm]	*1	6	9	10	10	10	10	10	10
Maximum Acceleration Torque	[Nm]	*2	14	21	21	21	21	21	14	14
Maximum Torque	[Nm]	*3	17	25	25	25	25	25	17	17
Emergency Stop Torque	[Nm]	*4	30	35	35	35	35	35	30	30
Nominal Input Speed	[rpm]	*5	4000	4000	4000	4000	4000	4000	4000	4000
Maximum Input Speed	[rpm]	*6	8000	8000	8000	8000	8000	8000	8000	8000
No Load Running Torque	[Nm]	*7	0.03							
Maximum Radial Load	[N]	*8	710							
Maximum Axial Load	[N]	*9	640							
Moment of Inertia (≤Ø 8)	[kgcm2]	--	0.053	0.041	0.036	0.034	0.032	0.031	0.031	0.030
Moment of Inertia (≤ Ø 14)	[kgcm2]	--	0.17	0.16	0.15	0.15	0.15	0.15	0.15	0.15
Efficiency	[%]	*10	95							
Torsional Rigidity	[Nm/arc-min]	*11	2							
Maximum Torsional Backlash	[arc-min]	--	≤ 5							
Noise Level	dB [A]	*12	≤ 61							
Protection Class	--	*13	IP54 (IP65)							
Ambient Temperature	[°C]	--	0-40							
Permitted Housing Temperature	[°C]	--	90							
Weight	[kg]	*14	0.7							

VRL 050 2-Stage Specifications

Frame Size	**050**									
Ratio	Units	Note	15	16	20	25	28	30	35	40
Nominal Output Torque	[Nm]	*1	9	14	14	15	15	11	15	15
Maximum Acceleration Torque	[Nm]	*2	14	21	21	21	21	14	21	21
Maximum Torque	[Nm]	*3	17	21	21	21	21	14	21	21
Emergency Stop Torque	[Nm]	*4	30	35	35	35	35	30	35	35
Nominal Input Speed	[rpm]	*5	4000	4000	4000	4000	4000	4000	4000	4000
Maximum Input Speed	[rpm]	*6	8500	8500	8500	8500	8500	8500	8500	8500
No Load Running Torque	[Nm]	*7	0.01							
Maximum Radial Load	[N]	*8	710							
Maximum Axial Load	[N]	*9	640							
Moment of Inertia (≤Ø 8)	[kgcm2]	--	0.035	0.038	0.034	0.034	0.038	0.030	0.034	0.030
Moment of Inertia (≤ Ø 14)	[kgcm2]	--	--	--	--	--	--	--	--	--
Efficiency	[%]	*10	90							
Torsional Rigidity	[Nm/arc-min]	*11	2							
Maximum Torsional Backlash	[arc-min]	--	≤ 7							
Noise Level	dB [A]	*12	≤ 61							
Protection Class	--	*13	IP54 (IP65)							
Ambient Temperature	[°C]	--	0-40							
Permitted Housing Temperature	[°C]	--	90							
Weight	[kg]	*14	0.8							

VRL 050 2-Stage Specifications

Frame Size			**050**						
Ratio	Units	Note	45	50	60	70	80	90	100
Nominal Output Torque	[Nm]	*1	11	15	15	15	15	11	11
Maximum Acceleration Torque	[Nm]	*2	14	21	21	21	21	14	14
Maximum Torque	[Nm]	*3	14	21	21	21	21	14	14
Emergency Stop Torque	[Nm]	*4	30	35	35	35	35	30	30
Nominal Input Speed	[rpm]	*5	4000	4000	4000	4000	4000	4000	4000
Maximum Input Speed	[rpm]	*6	8500	8500	8500	8500	8500	8500	8500
No Load Running Torque	[Nm]	*7	0.01						
Maximum Radial Load	[N]	*8	710						
Maximum Axial Load	[N]	*9	640						
Moment of Inertia (≤Ø 8)	[kgcm2]	--	0.034	0.030	0.030	0.030	0.030	0.030	0.030
Moment of Inertia (≤ Ø 14)	[kgcm2]	--	--	--	--	--	--	--	--
Efficiency	[%]	*10	90						
Torsional Rigidity	[Nm/arc-min]	*11	2						
Maximum Torsional Backlash	[arc-min]	--	≤ 7						
Noise Level	dB [A]	*12	≤ 61						
Protection Class	--	*13	IP54 (IP65)						
Ambient Temperature	[°C]	--	0-40						
Permitted Housing Temperature	[°C]	--	90						
Weight	[kg]	*14	0.8						

*1) At nominal input speed, service life is 20,000 hours

*2) The maximum torque when starting or stopping operation. Apply Cycle Factor f_0, found on page 468, for higher duty cycle applications

*3) Permitted 10,000 times during service life. Based on 10% of maximum radial load and smooth output shaft

*4) The maximum torque allowed under a stress situation. Permitted 1,000 times during service life

*5) The average input speed at nominal input torque. Maintain housing temperature below permitted value

*6) The maximum intermittent input speed

*7) Torque at no load applied to the input shaft at nominal input speed

*8) The maximum radial load that the gearbox can accept

*9) The maximum axial load that the gearbox can accept

*10) The efficiency at the nominal output torque rating

*11) This does not include lost motion

*12) Contact Nidec Drive Technology for the testing conditions and environment

*13) IP65 (wash-down) is available as an option. Contact Nidec Drive Technology for more details

*14) Weight may vary slightly between models

VRL 050 1-Stage Dimensions

Input bore size ≦φ8 mm

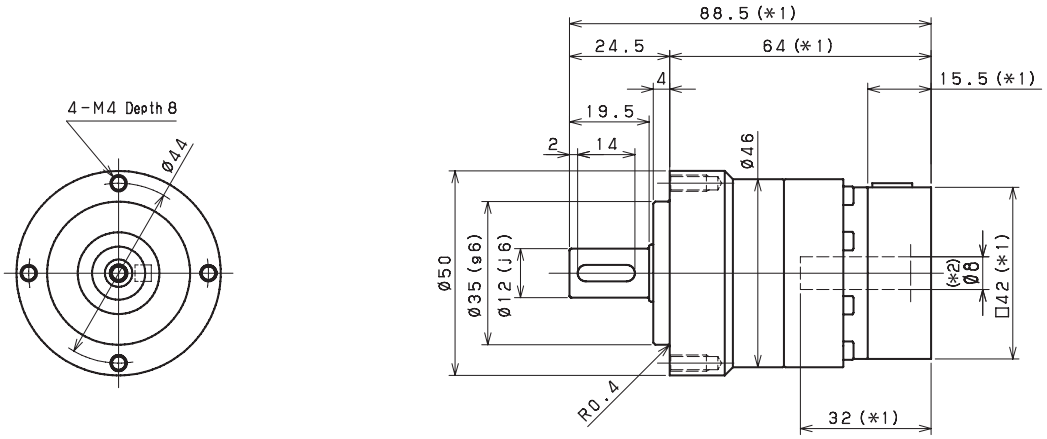

Input bore size ≦φ14 mm

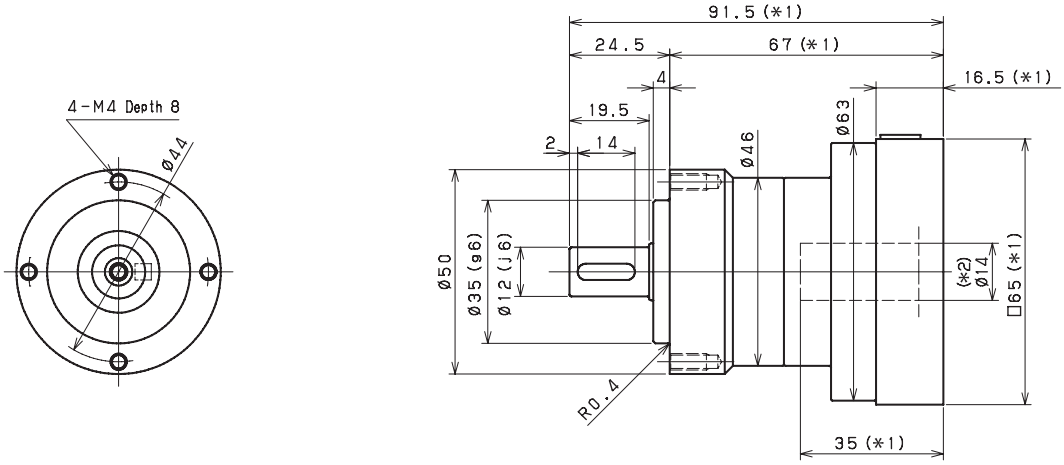

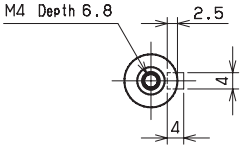

Keyed shaft

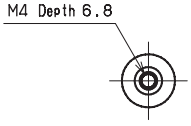

Smooth shaft

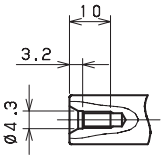

*1) Length will vary depending on motor

*2) Bushing will be inserted to adapt to motor shaft

VRL 050 2-Stage Dimensions

Input bore size ≦φ8 mm

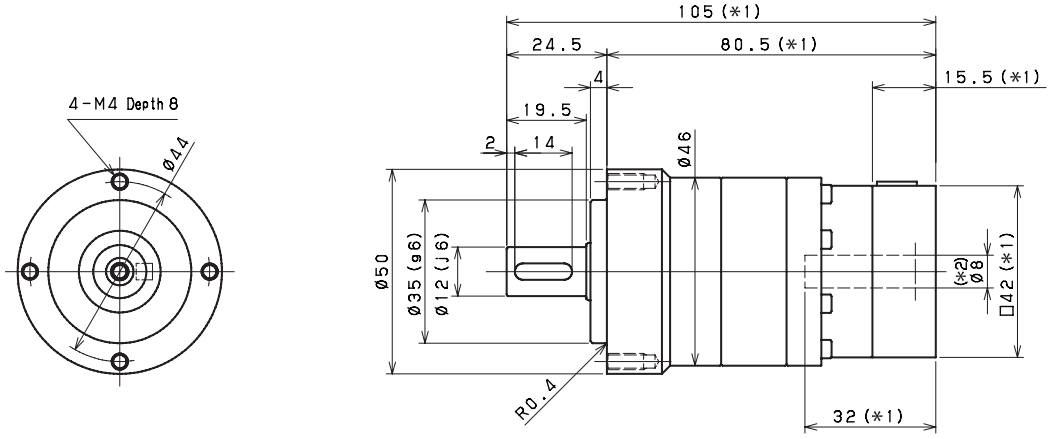

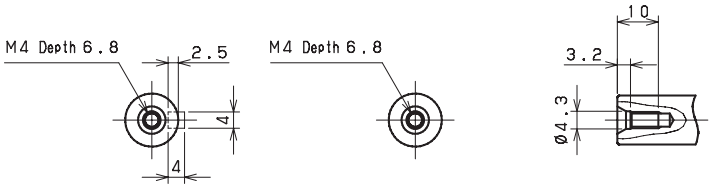

Keyed shaft

Smooth shaft

*1) Length will vary depending on motor

*2) Bushing will be inserted to adapt to motor shaft

VRL 070 1-Stage Specifications

Frame Size	**070**									
Ratio	Unit	Note	3	4	5	6	7	8	9	10
Nominal Output Torque	[Nm]	*1	19	27	28	28	28	28	28	28
Maximum Acceleration Torque	[Nm]	*2	46	66	66	66	66	66	46	46
Maximum Torque	[Nm]	*3	55	79	79	79	79	76	55	55
Emergency Stop Torque	[Nm]	*4	80	100	100	100	100	100	80	80
Nominal Input Speed	[rpm]	*5	3300	3300	4000	4000	4000	4000	4000	4000
Maximum Input Speed	[rpm]	*6	7500	7500	7500	7500	7500	7500	7500	7500
No Load Running Torque	[Nm]	*7	0.08							
Maximum Radial Load	[N]	*8	1200							
Maximum Axial Load	[N]	*9	1100							
Moment of Inertia (≤Ø 8)	[kgcm2]	--	0.14	0.095	0.077	0.068	0.062	0.059	0.057	0.056
Moment of Inertia (≤ Ø 14)	[kgcm2]	--	0.25	0.21	0.19	0.18	0.17	0.17	0.17	0.17
Moment of Inertia (≤ Ø 19)	[kgcm2]	--	0.53	0.48	0.46	0.46	0.45	0.45	0.44	0.44
Efficiency	[%]	*10	95							
Torsional Rigidity	[Nm/arcmin]	*11	3							
Maximum Torsional Backlash	[Arc-min]	--	≤ 5							
Noise Level	dB [A]	*12	≤ 66							
Protection Class	--	*13	IP54 (IP65)							
Ambient Temperature	[°C]	--	0-40							
Permitted Housing Temperature	[°C]	--	90							
Weight	[kg]	*14	1.5							

VRL 070 2-Stage Specifications

Frame Size	**070**									
Ratio	Unit	Note	15	16	20	25	28	30	35	40
Nominal Output Torque	[Nm]	*1	25	32	32	43	45	32	45	45
Maximum Acceleration Torque	[Nm]	*2	46	66	66	66	66	46	66	66
Maximum Torque	[Nm]	*3	46	66	66	66	66	46	66	66
Emergency Stop Torque	[Nm]	*4	80	100	100	100	100	80	100	100
Nominal Input Speed	[rpm]	*5	4000	4000	4000	4000	4000	4000	4000	4000
Maximum Input Speed	[rpm]	*6	8500	8500	8500	8500	8500	8500	8500	8500
No Load Running Torque	[Nm]	*7	0.04							
Maximum Radial Load	[N]	*8	1200							
Maximum Axial Load	[N]	*9	1100							
Moment of Inertia (≤Ø 8)	[kgcm2]	--	0.064	0.070	0.062	0.061	0.068	0.051	0.061	0.051
Moment of Inertia (≤ Ø 14)	[kgcm2]	--	0.18	0.18	0.17	0.17	0.18	0.16	0.17	0.16
Moment of Inertia (≤ Ø 19)	[kgcm2]	--	0.45	0.46	0.45	0.45	0.46	0.44	0.45	0.44
Efficiency	[%]	*10	90							
Torsional Rigidity	[Nm/arcmin]	*11	3							
Maximum Torsional Backlash	[Arc-min]	--	≤ 5							
Noise Level	dB [A]	*12	≤ 66							
Protection Class	--	*13	IP54 (IP65)							
Ambient Temperature	[°C]	--	0-40							
Permitted Housing Temperature	[°C]	--	90							
Weight	[kg]	*14	1.7							

VRL 070 2-Stage Specifications

Frame Size	**070**								
Ratio	Unit	Note	45	50	60	70	80	90	100
Nominal Output Torque	[Nm]	*1	32	45	45	45	45	32	32
Maximum Acceleration Torque	[Nm]	*2	46	66	66	66	66	46	46
Maximum Torque	[Nm]	*3	46	66	66	66	66	46	46
Emergency Stop Torque	[Nm]	*4	80	100	100	100	100	80	80
Nominal Input Speed	[rpm]	*5	4000	4800	4800	5500	5500	5500	5500
Maximum Input Speed	[rpm]	*6	8500	8500	8500	8500	8500	8500	8500
No Load Running Torque	[Nm]	*7	0.04						
Maximum Radial Load	[N]	*8	1200						
Maximum Axial Load	[N]	*9	1100						
Moment of Inertia (≤Ø 8)	[kgcm2]	--	0.061	0.051	0.051	0.051	0.051	0.051	0.051
Moment of Inertia (≤ Ø 14)	[kgcm2]	--	0.17	0.16	0.16	0.16	0.16	0.16	0.16
Moment of Inertia (≤ Ø 19)	[kgcm2]	--	0.45	0.44	0.44	0.44	0.44	0.44	0.44
Efficiency	[%]	*10	90						
Torsional Rigidity	[Nm/arcmin]	*11	3						
Maximum Torsional Backlash	[Arc-min]	--	≤ 5						
Noise Level	dB [A]	*12	≤ 66						
Protection Class	--	*13	IP54 (IP65)						
Ambient Temperature	[°C]	--	0-40						
Permitted Housing Temperature	[°C]	--	90						
Weight	[kg]	*14	1.7						

*1) At nominal input speed, service life is 20,000 hours

*2) The maximum torque when starting or stopping operation. Apply Cycle Factor $\mathbf{f_0}$, found on page 468, for higher duty cycle applications

*3) Permitted 10,000 times during service life. Based on 10% of maximum radial load and smooth output shaft

*4) The maximum torque allowed under a stress situation. Permitted 1,000 times during service life

*5) The average input speed at nominal input torque. Maintain housing temperature below permitted value

*6) The maximum intermittent input speed

*7) Torque at no load applied to the input shaft at nominal input speed

*8) The maximum radial load that the gearbox can accept

*9) The maximum axial load that the gearbox can accept

*10) The efficiency at the nominal output torque rating

*11) This does not include lost motion

*12) Contact Nidec Drive Technology for the testing conditions and environment

*13) IP65 (wash-down) is available as an option. Contact Nidec Drive Technology for more details

*14) Weight may vary slightly between models

VRL 070 1-Stage Dimensions

Input bore size ≦φ8 mm

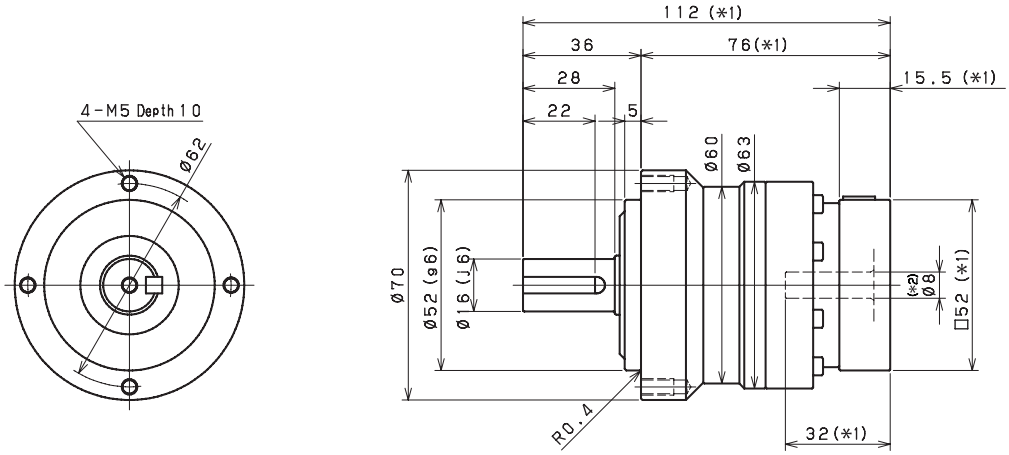

Input bore size ≦φ14 mm

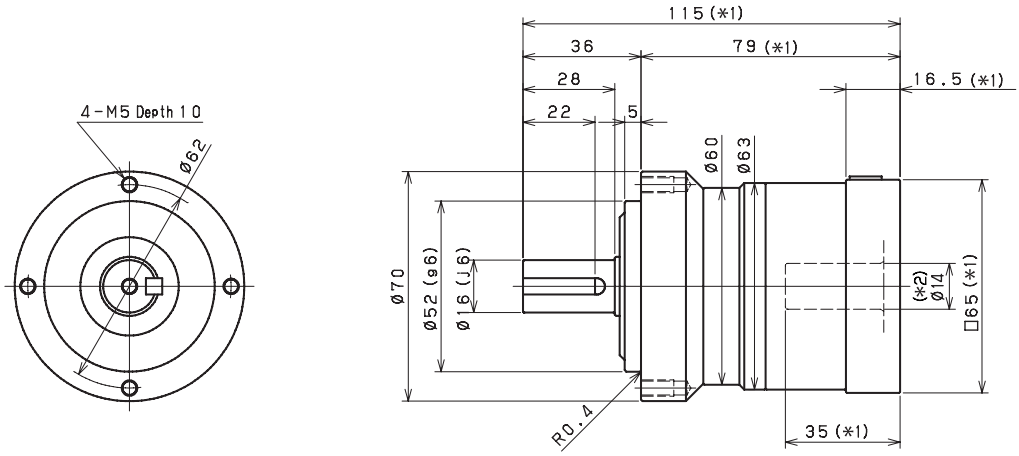

Input bore size ≦φ19 mm

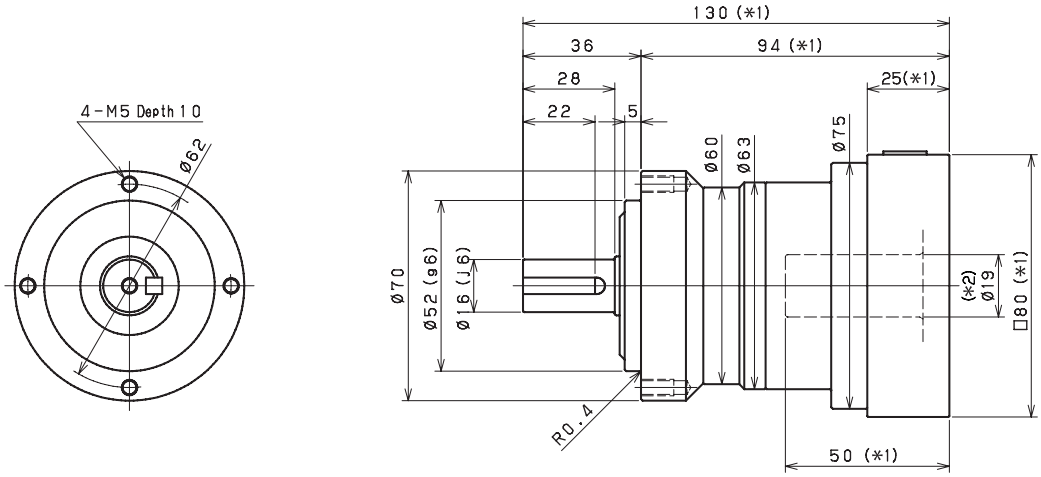

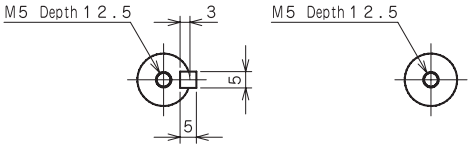

Keyed shaft　　Smooth shaft

*1) Length will vary depending on motor

*2) Bushing will be inserted to adapt to motor shaft

VRL 070 2-Stage Dimensions

Input bore size ≦φ8 mm

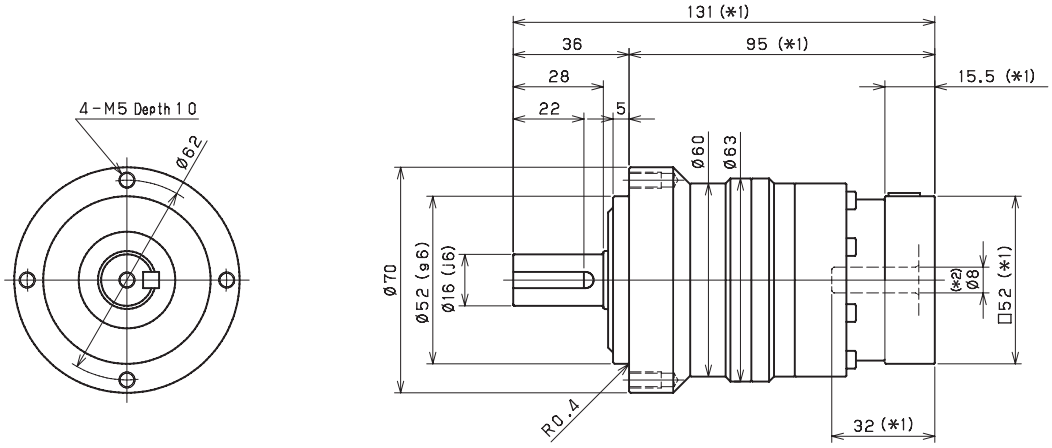

Input bore size ≦φ14 mm

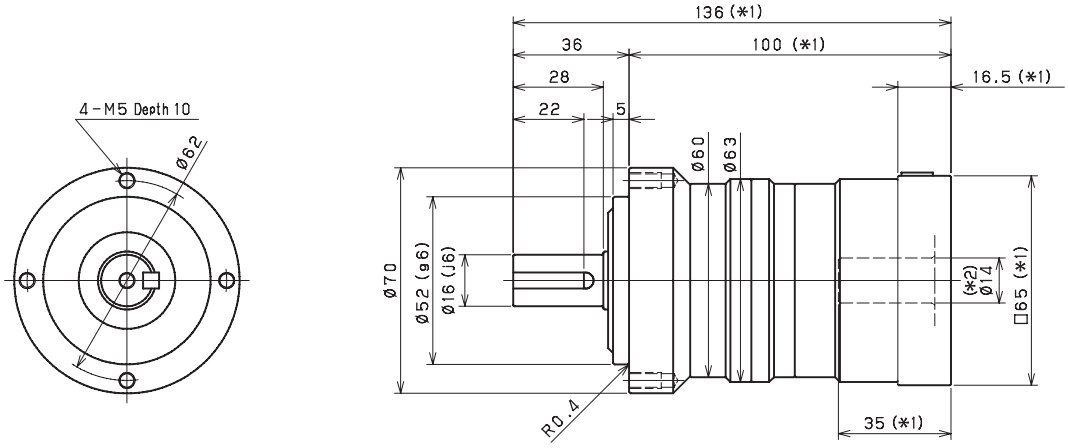

Input bore size ≦φ19 mm

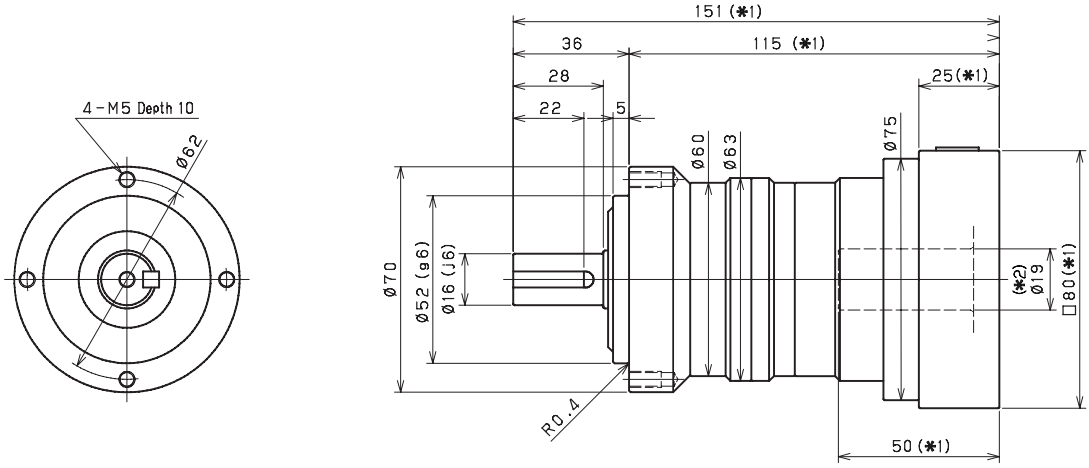

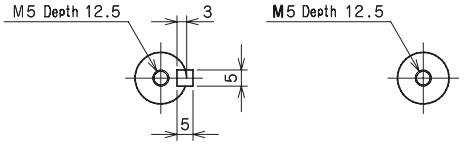

Keyed shaft　　Smooth shaft

*1) Length will vary depending on motor

*2) Bushing will be inserted to adapt to motor shaft

VRL 090 1-Stage Specifications

Frame Size	**090**									
Ratio	Unit	Note	3	4	5	6	7	8	9	10
Nominal Output Torque	[Nm]	*1	53	77	84	84	84	84	84	84
Maximum Acceleration Torque	[Nm]	*2	108	165	165	165	165	165	112	112
Maximum Torque	[Nm]	*3	135	200	200	195	195	190	145	145
Emergency Stop Torque	[Nm]	*4	200	250	250	250	250	250	200	200
Nominal Input Speed	[rpm]	*5	2900	2900	2900	2900	3100	3100	3100	3100
Maximum Input Speed	[rpm]	*6	7500	7500	7500	7500	7500	7500	7500	7500
No Load Running Torque	[Nm]	*7	0.35							
Maximum Radial Load	[N]	*8	2400							
Maximum Axial Load	[N]	*9	2200							
Moment of Inertia (≤ Ø 8)	[kgcm2]	--	--	--	--	--	--	--	--	--
Moment of Inertia (≤ Ø 14)	[kgcm2]	--	0.72	0.50	0.41	0.36	0.33	0.31	0.30	0.30
Moment of Inertia (≤ Ø 19)	[kgcm2]	--	1.1	0.90	0.80	0.75	0.73	0.71	0.70	0.70
Moment of Inertia (≤ Ø 28)	[kgcm2]	--	2.9	2.7	2.6	2.5	2.5	2.5	2.5	2.5
Efficiency	[%]	*10	95							
Torsional Rigidity	[Nm/arc-min]	*11	10							
Maximum Torsional Backlash	[arc-min]	--	≤ 5							
Noise Level	dB [A]	*12	≤ 67							
Protection Class	--	*13	IP54 (IP65)							
Ambient Temperature	[°C]	--	0-40							
Permitted Housing Temperature	[°C]	--	90							
Weight	[kg]	*14	3.5							

VRL 090 2-Stage Specifications

Frame Size	**090**									
Ratio	Unit	Note	15	16	20	25	28	30	35	40
Nominal Output Torque	[Nm]	*1	65	80	86	106	118	88	118	118
Maximum Acceleration Torque	[Nm]	*2	108	165	165	165	165	108	165	165
Maximum Torque	[Nm]	*3	108	165	165	165	165	108	165	165
Emergency Stop Torque	[Nm]	*4	200	250	250	250	250	200	250	250
Nominal Input Speed	[rpm]	*5	3500	3500	3500	3500	3500	3500	3500	3500
Maximum Input Speed	[rpm]	*6	8500	8500	8500	8500	8500	8500	8500	8500
No Load Running Torque	[Nm]	*7	0.06							
Maximum Radial Load	[N]	*8	2400							
Maximum Axial Load	[N]	*9	2200							
Moment of Inertia (≤ Ø 8)	[kgcm2]	--	0.20	0.25	0.19	0.19	0.24	0.12	0.18	0.11
Moment of Inertia (≤ Ø 14)	[kgcm2]	--	0.36	0.41	0.35	0.35	0.40	0.28	0.35	0.28
Moment of Inertia (≤ Ø 19)	[kgcm2]	--	0.75	0.79	0.74	0.74	0.78	0.67	0.73	0.67
Moment of Inertia (≤ Ø 28)	[kgcm2]	--	2.5	2.5	2.5	2.5	2.5	2.4	2.5	2.4
Efficiency	[%]	*10	90							
Torsional Rigidity	[Nm/arc-min]	*11	10							
Maximum Torsional Backlash	[arc-min]	--	≤ 5							
Noise Level	dB [A]	*12	≤ 67							
Protection Class	--	*13	IP54 (IP65)							
Ambient Temperature	[°C]	--	0-40							
Permitted Housing Temperature	[°C]	--	90							
Weight	[kg]	*14	4							

VRL 090 2-Stage Specifications

Frame Size	**090**								
Ratio	Unit	Note	45	50	60	70	80	90	100
Nominal Output Torque	[Nm]	*1	88	118	118	118	118	88	88
Maximum Acceleration Torque	[Nm]	*2	112	165	165	165	165	112	112
Maximum Torque	[Nm]	*3	112	165	165	165	165	112	112
Emergency Stop Torque	[Nm]	*4	200	250	250	250	250	200	200
Nominal Input Speed	[rpm]	*5	3500	3800	3800	4500	4500	4500	4500
Maximum Input Speed	[rpm]	*6	8500	8500	8500	8500	8500	8500	8500
No Load Running Torque	[Nm]	*7	0.06						
Maximum Radial Load	[N]	*8	2400						
Maximum Axial Load	[N]	*9	2200						
Moment of Inertia (≤ Ø 8)	[kgcm2]	--	0.18	0.11	0.11	0.11	0.11	0.11	0.11
Moment of Inertia (≤ Ø 14)	[kgcm2]	--	0.34	0.27	0.27	0.27	0.27	0.27	0.27
Moment of Inertia (≤ Ø 19)	[kgcm2]	--	0.73	0.67	0.67	0.67	0.67	0.67	0.67
Moment of Inertia (≤ Ø 28)	[kgcm2]	--	2.5	2.4	2.4	2.4	2.4	2.4	2.4
Efficiency	[%]	*10	90						
Torsional Rigidity	[Nm/arc-min]	*11	10						
Maximum Torsional Backlash	[arc-min]	--	≤ 5						
Noise Level	dB [A]	*12	≤ 67						
Protection Class	--	*13	IP54 (IP65)						
Ambient Temperature	[°C]	--	0-40						
Permitted Housing Temperature	[°C]	--	90						
Weight	[kg]	*14	4						

*1) At nominal input speed, service life is 20,000 hours

*2) The maximum torque when starting or stopping operation. Apply Cycle Factor $\mathbf{f_0}$, found on page 468, for higher duty cycle applications

*3) Permitted 10,000 times during service life. Based on 10% of maximum radial load and smooth output shaft

*4) The maximum torque allowed under a stress situation. Permitted 1,000 times during service life

*5) The average input speed at nominal input torque. Maintain housing temperature below permitted value

*6) The maximum intermittent input speed

*7) Torque at no load applied to the input shaft at nominal input speed

*8) The maximum radial load that the gearbox can accept

*9) The maximum axial load that the gearbox can accept

*10) The efficiency at the nominal output torque rating

*11) This does not include lost motion

*12) Contact Nidec Drive Technology for the testing conditions and environment

*13) IP65 (wash-down) is available as an option. Contact Nidec Drive Technology for more details

*14) Weight may vary slightly between models

VRL 090 1-Stage Dimensions

Input bore size ≦φ14 mm

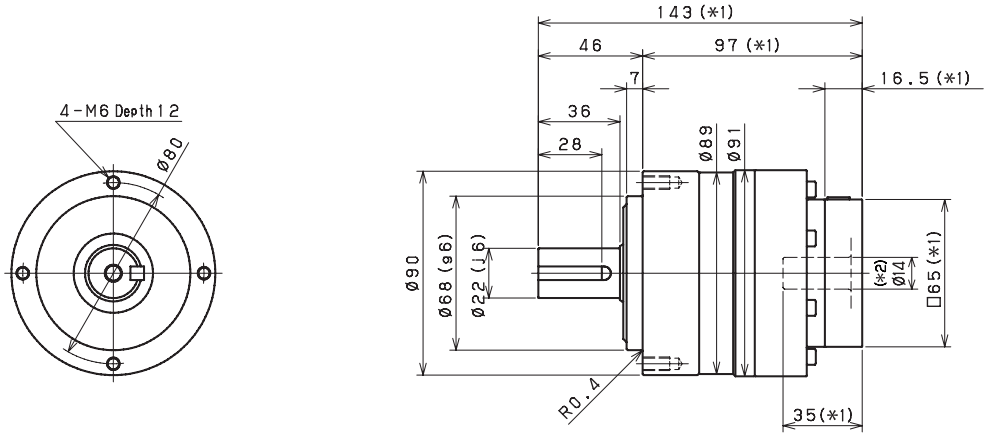

Input bore size ≦φ19 mm

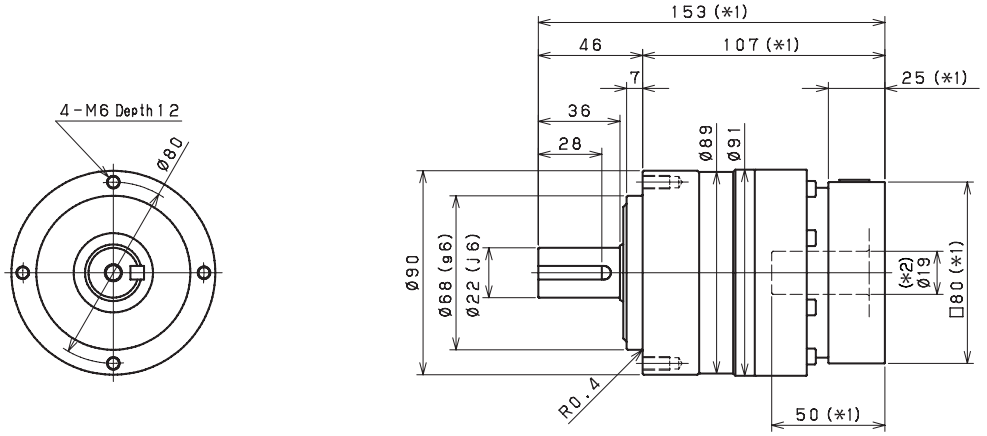

Input bore size ≦φ28 mm

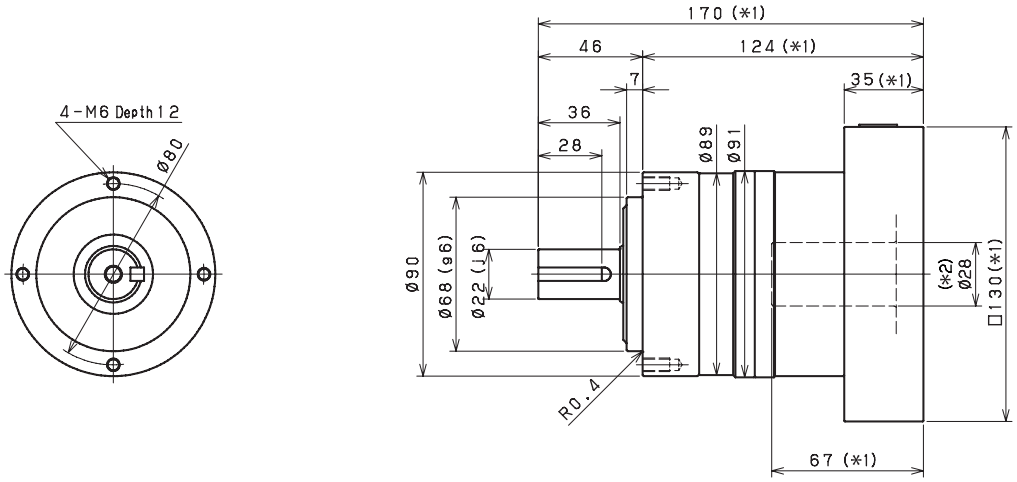

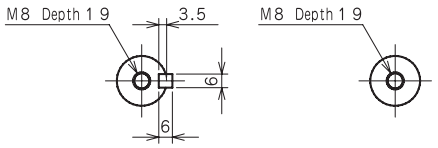

Keyed shaft　　Smooth shaft

*1) Length will vary depending on motor

*2) Bushing will be inserted to adapt to motor shaft

VRL 090 2-Stage Dimensions

Input bore size ≦φ8 mm

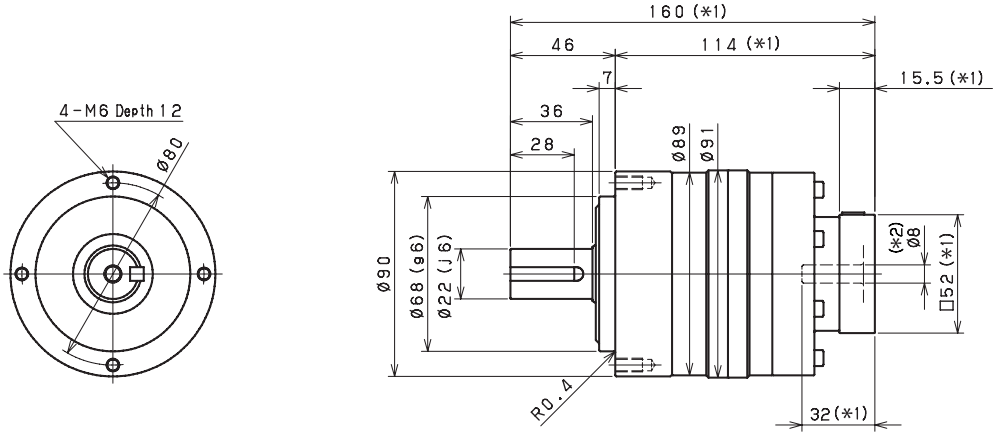

Input bore size ≦φ14 mm

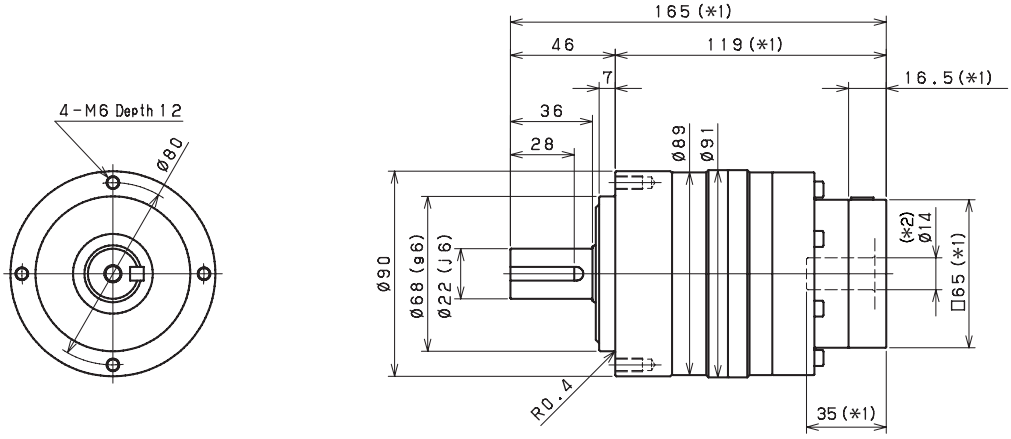

Input bore size ≦φ19 mm (*3)

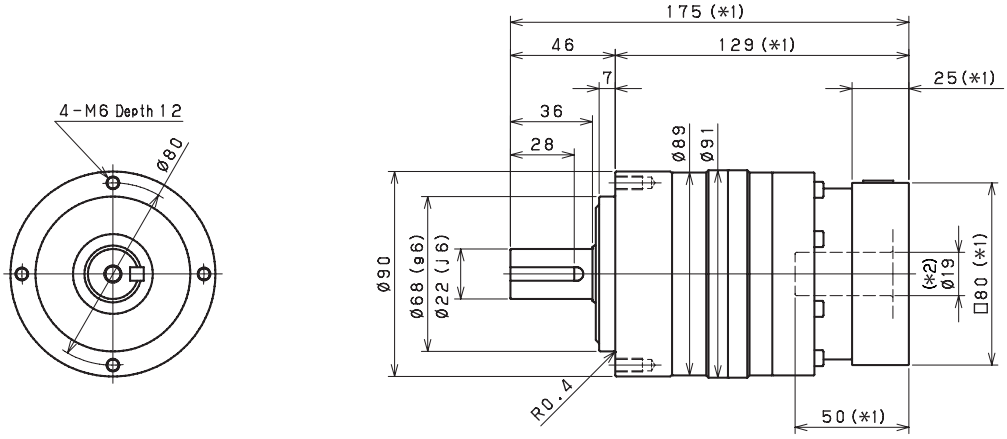

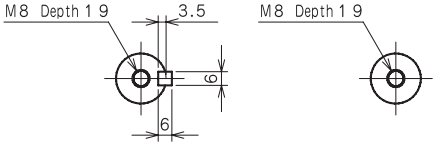

Keyed shaft　　Smooth shaft

*1) Length will vary depending on motor

*2) Bushing will be inserted to adapt to motor shaft

*3) 28mm input bore is available for this frame size. Use our online configurator to make your selection or contact us for assistance

VRL 120 1-Stage Specifications

Frame Size	**120**									
Ratio	Unit	Note	3	4	5	6	7	8	9	10
Nominal Output Torque	[Nm]	*1	128	146	190	190	190	190	190	190
Maximum Acceleration Torque	[Nm]	*2	270	390	390	390	390	390	292	292
Maximum Torque	[Nm]	*3	340	490	490	480	480	480	370	370
Emergency Stop Torque	[Nm]	*4	500	625	625	625	625	625	500	500
Nominal Input Speed	[rpm]	*5	2800	2800	2800	2800	2800	2800	2800	2800
Maximum Input Speed	[rpm]	*6	5500	5500	5500	5500	5500	5500	5500	5500
No Load Running Torque	[Nm]	*7	1.30							
Maximum Radial Load	[N]	*8	4300							
Maximum Axial Load	[N]	*9	3900							
Moment of Inertia (≤ Ø 8)	[kgcm2]	--	--	--	--	--	--	--	--	--
Moment of Inertia (≤ Ø 14)	[kgcm2]	--	--	--	--	--	--	--	--	--
Moment of Inertia (≤ Ø 19)	[kgcm2]	--	3.2	2.0	1.4	1.2	1.0	0.92	0.86	0.83
Moment of Inertia (≤ Ø 28)	[kgcm2]	--	5.1	3.7	3.1	2.9	2.8	2.7	2.6	2.6
Moment of Inertia (≤ Ø 38)	[kgcm2]	--	12	10	9.5	9.3	9.1	9	8.9	8.9
Efficiency	[%]	*10	95							
Torsional Rigidity	[Nm/arc-min]	*11	31							
Maximum Torsional Backlash	[arc-min]	--	≤ 5							
Noise Level	dB [A]	*13	≤ 71							
Protection Class	*15	--	IP54 (IP65)							
Ambient Temperature	[°C]	--	0-40							
Permitted Housing Temperature	[°C]	*13	90							
Weight	[kg]	*14	7.8							

VRL 120 2-Stage Specifications

Frame Size	**120**									
Ratio	Unit	Note	15	16	20	25	28	30	35	40
Nominal Output Torque	[Nm]	*1	174	200	220	280	280	220	280	270
Maximum Acceleration Torque	[Nm]	*2	270	390	390	390	390	270	390	390
Maximum Torque	[Nm]	*3	270	390	390	390	390	270	390	390
Emergency Stop Torque	[Nm]	*4	500	625	625	625	625	500	625	625
Nominal Input Speed	[rpm]	*5	3100	3100	3100	3100	3100	3100	3100	3100
Maximum Input Speed	[rpm]	*6	6500	6500	6500	6500	6500	6500	6500	6500
No Load Running Torque	[Nm]	*7	0.42							
Maximum Radial Load	[N]	*8	4300							
Maximum Axial Load	[N]	*9	3900							
Moment of Inertia (≤ Ø 8)	[kgcm2]	--	--	--	--	--	--	--	--	--
Moment of Inertia (≤ Ø 14)	[kgcm2]	--	0.77	0.98	0.72	0.70	0.92	0.38	0.68	0.37
Moment of Inertia (≤ Ø 19)	[kgcm2]	--	1.2	1.4	1.1	1.1	1.3	0.78	1.1	0.77
Moment of Inertia (≤ Ø 28)	[kgcm2]	--	2.9	3.1	2.8	2.8	3	2.5	2.8	2.5
Moment of Inertia (≤ Ø 38)	[kgcm2]	--	9.2	9.4	9.1	9.1	9.3	8.8	9.1	8.8
Efficiency	[%]	*10	90							
Torsional Rigidity	[Nm/arc-min]	*11	31							
Maximum Torsional Backlash	[arc-min]	--	≤ 5							
Noise Level	dB [A]	*13	≤ 71							
Protection Class	*15	--	IP54 (IP65)							
Ambient Temperature	[°C]	--	0-40							
Permitted Housing Temperature	[°C]	*13	90							
Weight	[kg]	*14	8.7							

VRL 120 2-Stage Specifications

Frame Size			**120**						
Ratio	Unit	Note	45	50	60	70	80	90	100
Nominal Output Torque	[Nm]	*1	220	280	280	280	280	220	220
Maximum Acceleration Torque	[Nm]	*2	292	390	390	390	390	292	292
Maximum Torque	[Nm]	*3	292	390	390	390	390	292	292
Emergency Stop Torque	[Nm]	*4	500	625	625	625	625	500	500
Nominal Input Speed	[rpm]	*5	3100	3500	3500	4200	4200	4200	4200
Maximum Input Speed	[rpm]	*6	6500	6500	6500	6500	6500	6500	6500
No Load Running Torque	[Nm]	*7	0.42						
Maximum Radial Load	[N]	*8	4300						
Maximum Axial Load	[N]	*9	3900						
Moment of Inertia (≤ Ø 8)	[kgcm2]	--	--	0.19	0.19	0.19	0.19	0.19	0.19
Moment of Inertia (≤ Ø 14)	[kgcm2]	--	0.68	0.36	0.36	0.36	0.36	0.36	0.36
Moment of Inertia (≤ Ø 19)	[kgcm2]	--	1.1	0.76	0.76	0.76	0.76	0.76	0.76
Moment of Inertia (≤ Ø 28)	[kgcm2]	--	2.8	2.5	2.5	2.5	2.5	2.5	2.5
Moment of Inertia (≤ Ø 38)	[kgcm2]	--	9.1	8.8	8.8	8.8	8.8	8.8	8.8
Efficiency	[%]	*10	90						
Torsional Rigidity	[Nm/arc-min]	*11	31						
Maximum Torsional Backlash	[arc-min]	--	≤ 5						
Noise Level	dB [A]	*13	≤ 71						
Protection Class	*15	--	IP54 (IP65)						
Ambient Temperature	[°C]	--	0-40						
Permitted Housing Temperature	[°C]	*13	90						
Weight	[kg]	*14	8.7						

*1) At nominal input speed, service life is 20,000 hours

*2) The maximum torque when starting or stopping operation. Apply Cycle Factor $\mathbf{f_0}$, found on page 468, for higher duty cycle applications

*3) Permitted 10,000 times during service life. Based on 10% of maximum radial load and smooth output shaft

*4) The maximum torque allowed under a stress situation. Permitted 1,000 times during service life

*5) The average input speed at nominal input torque. Maintain housing temperature below permitted value

*6) The maximum intermittent input speed

*7) Torque at no load applied to the input shaft at nominal input speed

*8) The maximum radial load that the gearbox can accept

*9) The maximum axial load that the gearbox can accept

*10) The efficiency at the nominal output torque rating

*11) This does not include lost motion

*12) Contact Nidec Drive Technology for the testing conditions and environment

*13) IP65 (wash-down) is available as an option. Contact Nidec Drive Technology for more details

*14) Weight may vary slightly between models

VRL 120 1-Stage Dimensions

Input bore size ≦φ19 mm

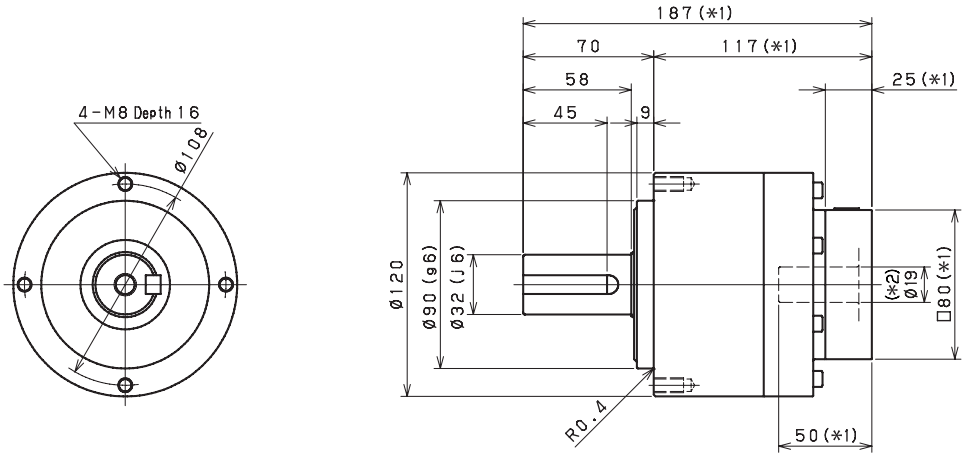

Input bore size ≦φ28 mm

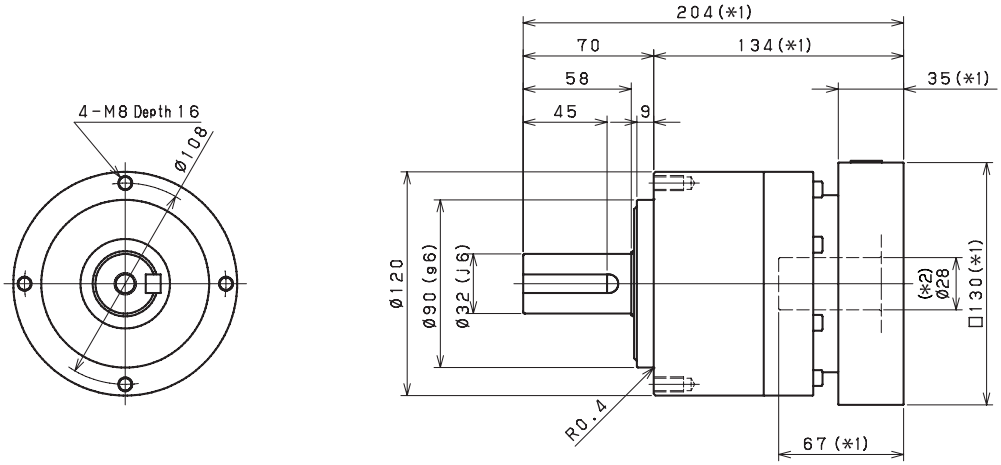

Input bore size ≦φ38 mm

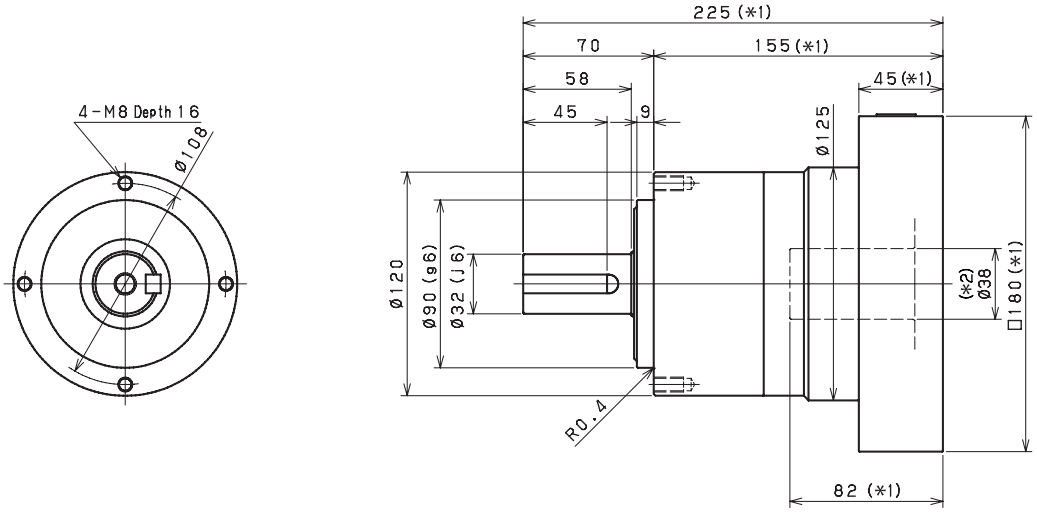

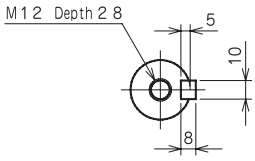

Keyed shaft

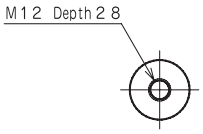

Smooth shaft

*1) Length will vary depending on motor

*2) Bushing will be inserted to adapt to motor shaft

VRL 120 2-Stage Dimensions

Input bore size ≦φ14 mm

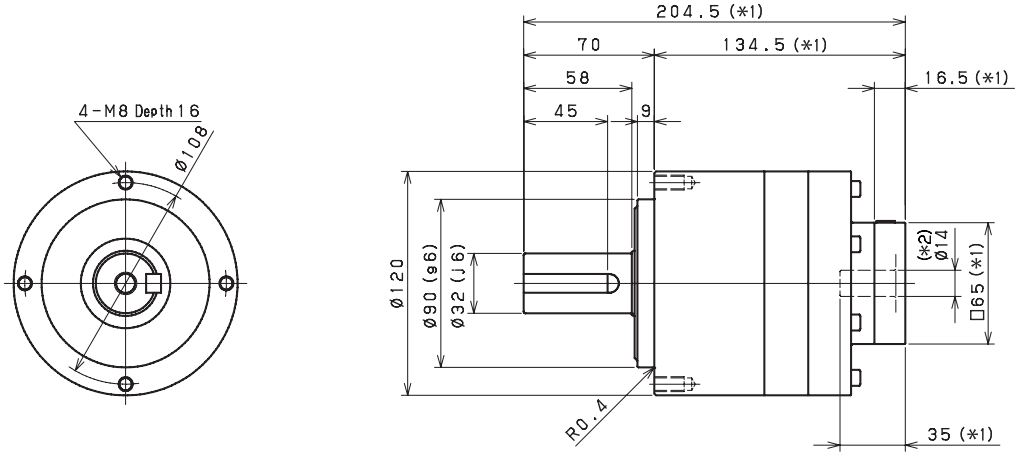

Input bore size ≦φ19 mm

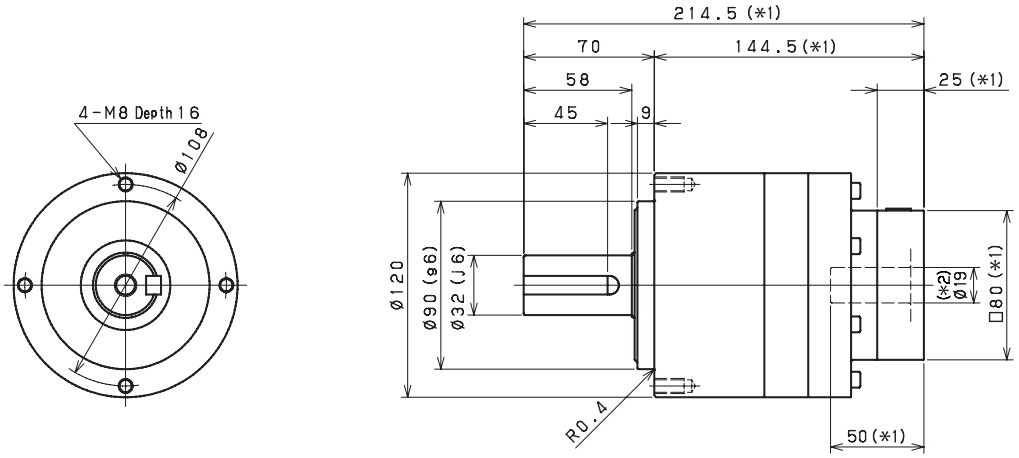

Input bore size ≦φ28 mm (*3)

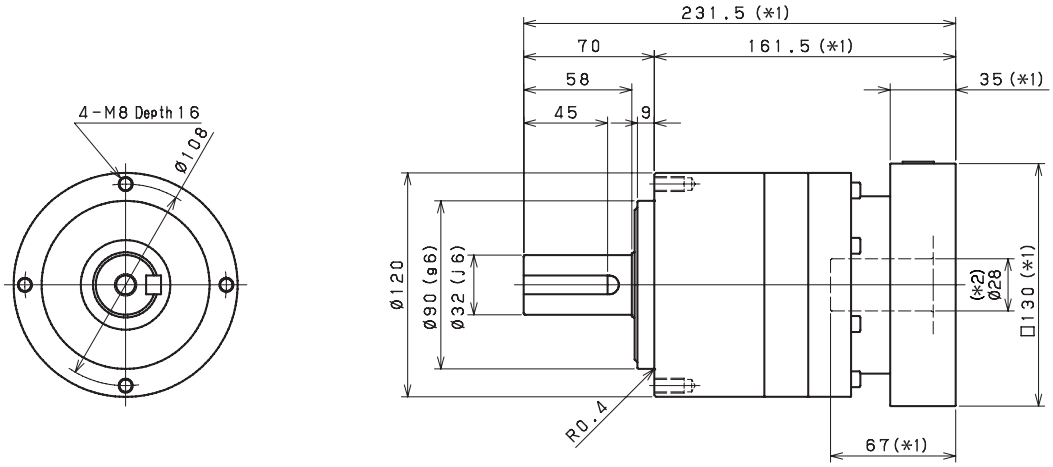

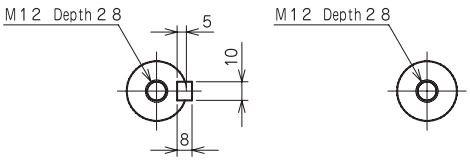

Keyed shaft　　Smooth shaft

*1) Length will vary depending on motor

*2) Bushing will be inserted to adapt to motor shaft

*3) 38mm input bore is available for this frame size. Use our online configurator to make your selection or contact us for assistance

VRL 155 1-Stage Specifications

Frame Size			**155**							
Ratio	Unit	Note	3	4	5	6	7	8	9	10
Nominal Output Torque	[Nm]	*1	248	280	380	380	380	380	380	380
Maximum Acceleration Torque	[Nm]	*2	560	840	840	840	840	840	610	610
Maximum Torque	[Nm]	*3	630	1000	1000	950	950	950	730	730
Emergency Stop Torque	[Nm]	*4	1000	1250	1250	1250	1250	1250	1000	1000
Nominal Input Speed	[rpm]	*5	2100	2100	2100	2100	2600	2600	2600	2600
Maximum Input Speed	[rpm]	*6	5000	5000	5000	5000	5000	5000	5000	5000
No Load Running Torque	[Nm]	*7	1.63							
Maximum Radial Load	[N]	*8	9100							
Maximum Axial Load	[N]	*9	8200							
Moment of Inertia (≤ Ø 14)	[kgcm2]	--	--	--	--	--	--	--	--	--
Moment of Inertia (≤ Ø 19)	[kgcm2]	--	--	--	--	--	--	--	--	--
Moment of Inertia (≤ Ø 28)	[kgcm2]	--	12	7.3	5.3	4.3	3.9	3.5	3.3	3.2
Moment of Inertia (≤ Ø 38)	[kgcm2]	--	18	14	12	11	10	9.9	9.7	9.6
Moment of Inertia (≤ Ø 48)	[kgcm2]	--	35	29	27	26	25	25	25	25
Efficiency	[%]	*10	95							
Torsional Rigidity	[Nm/arc-min]	*11	60							
Maximum Torsional Backlash	[arc-min]	--	≤ 5							
Noise Level	dB [A]	*12	≤ 67							
Protection Class	--	*13	IP54 (IP65)							
Ambient Temperature	[°C]	--	0-40							
Permitted Housing Temperature	[°C]	--	90							
Weight	[kg]	*14	16							

VRL 155 2-Stage Specifications

Frame Size			**155**							
Ratio	Unit	Note	15	16	20	25	28	30	35	40
Nominal Output Torque	[Nm]	*1	360	380	410	590	590	440	590	500
Maximum Acceleration Torque	[Nm]	*2	560	840	840	840	840	560	840	840
Maximum Torque	[Nm]	*3	560	840	840	840	840	560	840	840
Emergency Stop Torque	[Nm]	*4	1000	1250	1250	1250	1250	1000	1250	1250
Nominal Input Speed	[rpm]	*5	2900	2900	2900	2900	2900	2900	2900	2900
Maximum Input Speed	[rpm]	*6	6000	6000	6000	6000	6000	6000	6000	6000
No Load Running Torque	[Nm]	*7	0.56							
Maximum Radial Load	[N]	*8	9100							
Maximum Axial Load	[N]	*9	8200							
Moment of Inertia (≤ Ø 14)	[kgcm2]	--	--	--	--	--	--	--	--	--
Moment of Inertia (≤ Ø 19)	[kgcm2]	--	2.6	3.5	2.4	2.4	3.3	1.1	2.3	1.1
Moment of Inertia (≤ Ø 28)	[kgcm2]	--	4.4	5.3	4.2	4.1	5.1	2.9	4.1	2.8
Moment of Inertia (≤ Ø 38)	[kgcm2]	--	11	12	10	10	11	9.2	10	9.1
Moment of Inertia (≤ Ø 48)	[kgcm2]	--	26	27	25	25	26	24	25	24
Efficiency	[%]	*10	90							
Torsional Rigidity	[Nm/arc-min]	*11	60							
Maximum Torsional Backlash	[arc-min]	--	≤ 5							
Noise Level	dB [A]	*12	≤ 67							
Protection Class	--	*13	IP54 (IP65)							
Ambient Temperature	[°C]	--	0-40							
Permitted Housing Temperature	[°C]	--	90							
Weight	[kg]	*14	18							

VRL 155 2-Stage Specifications

Frame Size	**155**								
Ratio	Unit	Note	45	50	60	70	80	90	100
Nominal Output Torque	[Nm]	*1	440	590	590	590	590	440	440
Maximum Acceleration Torque	[Nm]	*2	610	840	840	840	840	610	610
Maximum Torque	[Nm]	*3	610	840	840	840	840	610	610
Emergency Stop Torque	[Nm]	*4	1000	1250	1250	1250	1250	1000	1000
Nominal Input Speed	[rpm]	*5	2900	3200	3200	3900	3900	3900	3900
Maximum Input Speed	[rpm]	*6	6000	6000	6000	6000	6000	6000	6000
No Load Running Torque	[Nm]	*7	0.56						
Maximum Radial Load	[N]	*8	9100						
Maximum Axial Load	[N]	*9	8200						
Moment of Inertia (≤ Ø 14)	[kgcm2]	--	--	0.65	0.64	0.64	0.63	0.63	0.63
Moment of Inertia (≤ Ø 19)	[kgcm2]	--	2.3	1.1	1.1	1.1	1.1	1.1	1.1
Moment of Inertia (≤ Ø 28)	[kgcm2]	--	4.0	2.8	2.8	2.8	2.8	2.8	2.8
Moment of Inertia (≤ Ø 38)	[kgcm2]	--	10	9.1	9.1	9.1	9.1	9.1	9.1
Moment of Inertia (≤ Ø 48)	[kgcm2]	--	25	24	24	24	24	24	24
Efficiency	[%]	*10	90						
Torsional Rigidity	[Nm/arc-min]	*11	60						
Maximum Torsional Backlash	[arc-min]	--	≤ 5						
Noise Level	dB [A]	*12	≤ 67						
Protection Class	--	*13	IP54 (IP65)						
Ambient Temperature	[°C]	--	0-40						
Permitted Housing Temperature	[°C]	--	90						
Weight	[kg]	*14	18						

*1) At nominal input speed, service life is 20,000 hours

*2) The maximum torque when starting or stopping operation. Apply Cycle Factor $\mathbf{f_0}$, found on page 468, for higher duty cycle applications

*3) Permitted 10,000 times during service life. Based on 10% of maximum radial load and smooth output shaft

*4) The maximum torque allowed under a stress situation. Permitted 1,000 times during service life

*5) The average input speed at nominal input torque. Maintain housing temperature below permitted value

*6) The maximum intermittent input speed

*7) Torque at no load applied to the input shaft at nominal input speed

*8) The maximum radial load that the gearbox can accept

*9) The maximum axial load that the gearbox can accept

*10) The efficiency at the nominal output torque rating

*11) This does not include lost motion

*12) Contact Nidec Drive Technology for the testing conditions and environment

*13) IP65 (wash-down) is available as an option. Contact Nidec Drive Technology for more details

*14) Weight may vary slightly between models

VRL 155 1-Stage Dimensions

Input bore size ≦φ28 mm

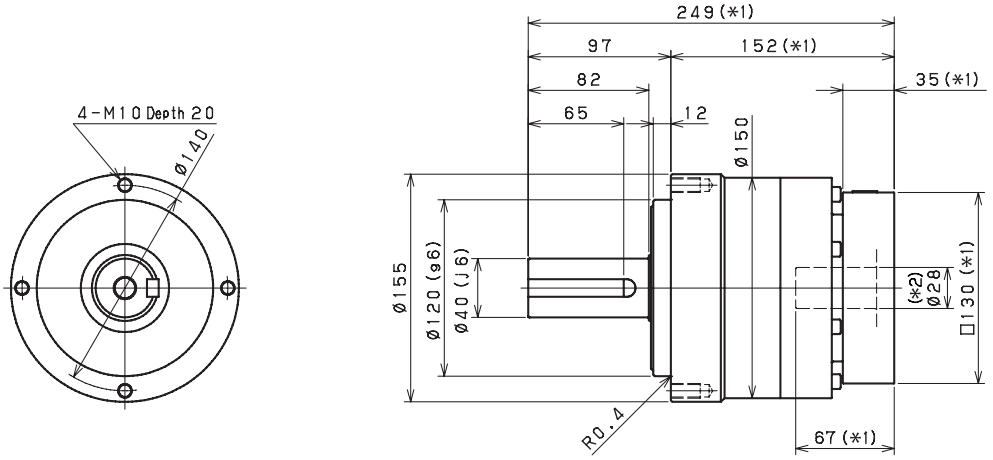

Input bore size ≦φ38 mm

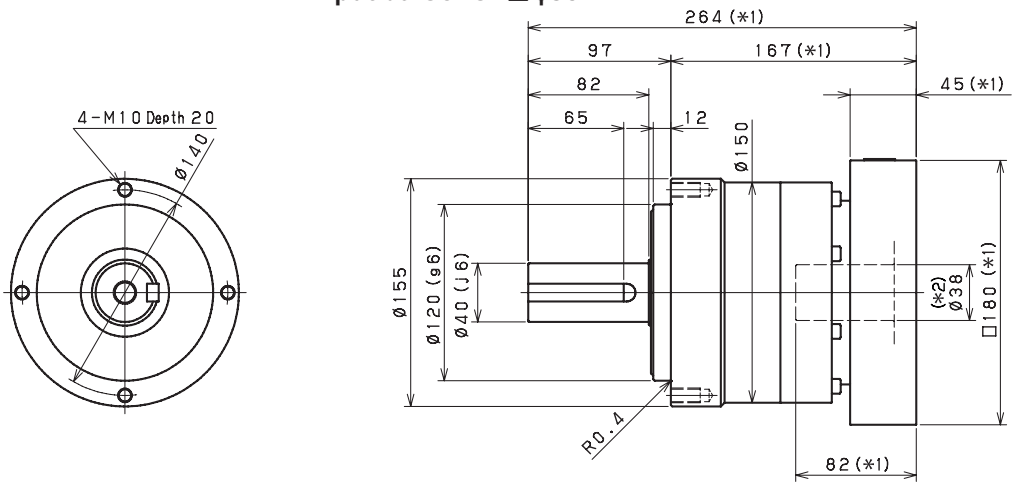

Input bore size ≦φ48 mm

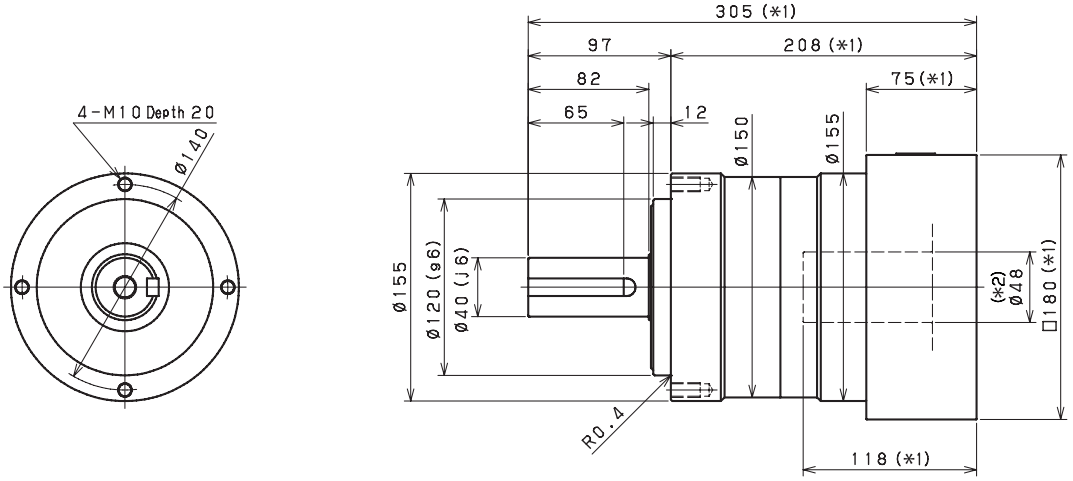

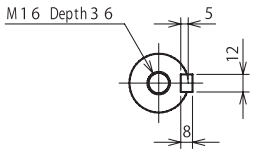

Keyed shaft

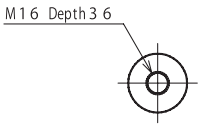

Smooth shaft

*1) Length will vary depending on motor

*2) Bushing will be inserted to adapt to motor shaft

VRL 155 2-Stage Dimensions

Input bore size ≦φ19 mm

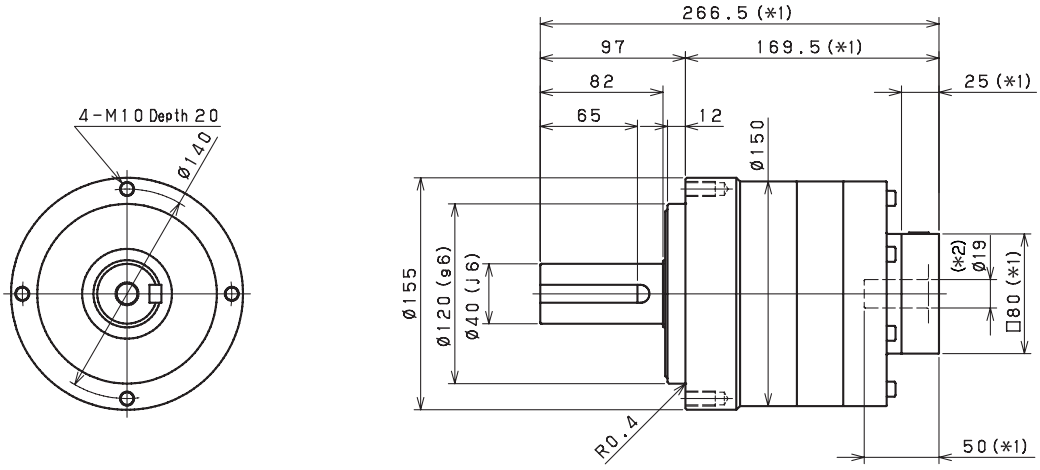

Input bore size ≦φ28 mm

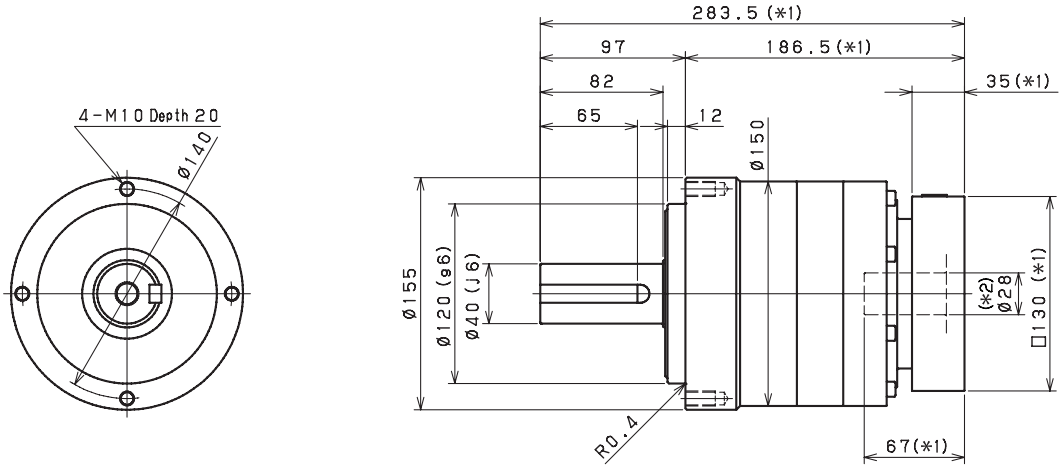

Input bore size ≦φ38 mm (*3)

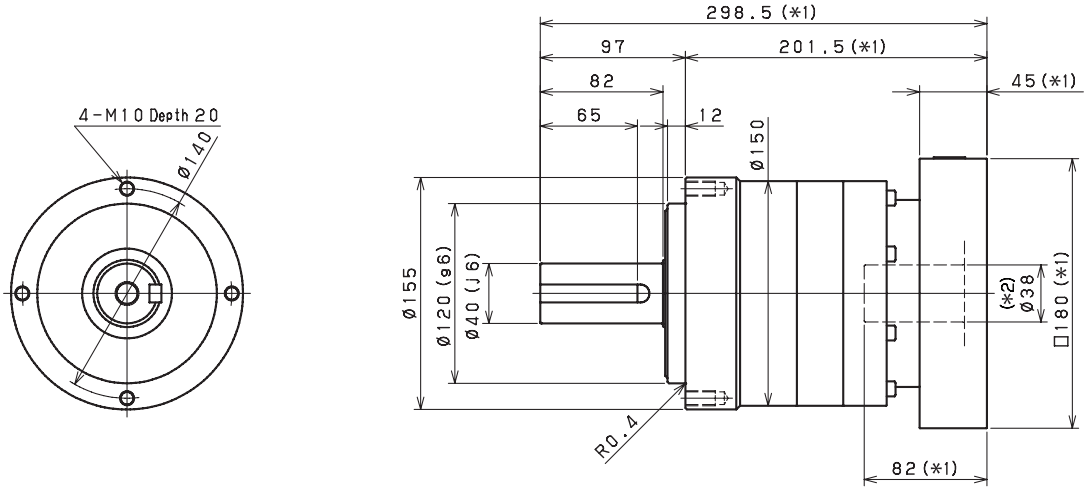

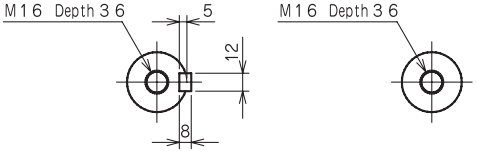

Keyed shaft　　Smooth shaft

*1) Length will vary depending on motor

*2) Bushing will be inserted to adapt to motor shaft

*3) 48mm input bore is available for this frame size. Use our online configurator to make your selection or contact us for assistance

VRL 205 1-Stage Specifications

Frame Size	**205**									
Ratio	Unit	Note	3	4	5	6	7	8	9	10
Nominal Output Torque	[Nm]	*1	570	850	910	910	910	910	910	910
Maximum Acceleration Torque	[Nm]	*2	1300	1850	1850	1850	1850	1850	1350	1350
Maximum Torque	[Nm]	*3	1450	2250	2250	2150	2150	2150	1750	1750
Emergency Stop Torque	[Nm]	*4	2200	2750	2750	2750	2750	2750	2200	2200
Nominal Input Speed	[rpm]	*5	1500	1500	1500	1500	2300	2300	2300	2300
Maximum Input Speed	[rpm]	*6	4500	4500	4500	4500	4500	4500	4500	4500
No Load Running Torque	[Nm]	*7	2.68							
Maximum Radial Load	[N]	*8	15000							
Maximum Axial Load	[N]	*9	14000							
Moment of Inertia (≤ Ø 19)	[kgcm2]	--	--	--	--	--	--	--	--	--
Moment of Inertia (≤ Ø 28)	[kgcm2]	--	--	--	--	--	--	--	--	--
Moment of Inertia (≤ Ø 38)	[kgcm2]	--	43	26	19	15	14	13	12	12
Moment of Inertia (≤ Ø 48)	[kgcm2]	--	57	41	34	31	29	28	27	27
Moment of Inertia (≤ Ø 65)	[kgcm2]	--	110	85	78	75	73	72	71	71
Efficiency	[%]	*10	95							
Torsional Rigidity	[Nm/arc-min]	*11	175							
Maximum Torsional Backlash	[arc-min]	--	≤ 5							
Noise Level	dB [A]	*12	≤ 67							
Protection Class	--	*13	IP54 (IP65)							
Ambient Temperature	[°C]	--	0-40							
Permitted Housing Temperature	[°C]	--	90							
Weight	[kg]	*14	39							

VRL 205 2-Stage Specifications

Frame Size	**205**									
Ratio	Unit	Note	15	16	20	25	28	30	35	40
Nominal Output Torque	[Nm]	*1	660	850	910	1100	1300	930	1300	1200
Maximum Acceleration Torque	[Nm]	*2	1300	1850	1850	1850	1850	1300	1850	1850
Maximum Torque	[Nm]	*3	1300	1850	1850	1850	1850	1300	1850	1850
Emergency Stop Torque	[Nm]	*4	2200	2750	2750	2750	2750	2200	2750	2750
Nominal Input Speed	[rpm]	*5	2700	2700	2700	2700	2700	2700	2700	2700
Maximum Input Speed	[rpm]	*6	5000	5000	5000	5000	5000	5000	5000	5000
No Load Running Torque	[Nm]	*7	1.39							
Maximum Radial Load	[N]	*8	15000							
Maximum Axial Load	[N]	*9	14000							
Moment of Inertia (≤ Ø 19)	[kgcm2]	--	--	--	--	--	--	--	--	--
Moment of Inertia (≤ Ø 28)	[kgcm2]	--	8.8	11	8.1	7.9	11	4.0	7.6	3.9
Moment of Inertia (≤ Ø 38)	[kgcm2]	--	15	18	14	14	17	10	14	10
Moment of Inertia (≤ Ø 48)	[kgcm2]	--	30	33	29	29	32	25	29	25
Moment of Inertia (≤ Ø 65)	[kgcm2]	--	--	--	--	--	--	--	--	--
Efficiency	[%]	*10	90							
Torsional Rigidity	[Nm/arc-min]	*11	175							
Maximum Torsional Backlash	[arc-min]	--	≤ 5							
Noise Level	dB [A]	*12	≤ 67							
Protection Class	--	*13	IP54 (IP65)							
Ambient Temperature	[°C]	--	0-40							
Permitted Housing Temperature	[°C]	--	90							
Weight	[kg]	*14	40							

VRL 205 2-Stage Specifications

Frame Size			**205**						
Ratio	Unit	Note	45	50	60	70	80	90	100
Nominal Output Torque	[Nm]	*1	930	1300	1300	1300	1300	930	930
Maximum Acceleration Torque	[Nm]	*2	1350	1850	1850	1850	1850	1350	1350
Maximum Torque	[Nm]	*3	1350	1850	1850	1850	1850	1350	1350
Emergency Stop Torque	[Nm]	*4	2200	2750	2750	2750	2750	2200	2200
Nominal Input Speed	[rpm]	*5	2700	2900	2900	3400	3400	3400	3400
Maximum Input Speed	[rpm]	*6	5000	5000	5000	5000	5000	5000	5000
No Load Running Torque	[Nm]	*7	1.39						
Maximum Radial Load	[N]	*8	15000						
Maximum Axial Load	[N]	*9	14000						
Moment of Inertia (≤ Ø 19)	[kgcm2]	--	--	1.9	1.9	1.8	1.8	1.8	1.8
Moment of Inertia (≤ Ø 28)	[kgcm2]	--	7.6	3.8	3.8	3.8	3.7	3.7	3.7
Moment of Inertia (≤ Ø 38)	[kgcm2]	--	14	10	10	10	10	10	10
Moment of Inertia (≤ Ø 48)	[kgcm2]	--	29	25	25	25	25	25	25
Moment of Inertia (≤ Ø 65)	[kgcm2]	--	--	--	--	--	--	--	--
Efficiency	[%]	*10	90						
Torsional Rigidity	[Nm/arc-min]	*11	175						
Maximum Torsional Backlash	[arc-min]	--	≤ 5						
Noise Level	dB [A]	*12	≤ 67						
Protection Class	--	*13	IP54 (IP65)						
Ambient Temperature	[°C]	--	0-40						
Permitted Housing Temperature	[°C]	--	90						
Weight	[kg]	*14	40						

*1) At nominal input speed, service life is 20,000 hours

*2) The maximum torque when starting or stopping operation. Apply Cycle Factor $\mathbf{f_0}$, found on page 468, for higher duty cycle applications

*3) Permitted 10,000 times during service life. Based on 10% of maximum radial load and smooth output shaft

*4) The maximum torque allowed under a stress situation. Permitted 1,000 times during service life

*5) The average input speed at nominal input torque. Maintain housing temperature below permitted value

*6) The maximum intermittent input speed

*7) Torque at no load applied to the input shaft at nominal input speed

*8) The maximum radial load that the gearbox can accept

*9) The maximum axial load that the gearbox can accept

*10) The efficiency at the nominal output torque rating

*11) This does not include lost motion

*12) Contact Nidec Drive Technology for the testing conditions and environment

*13) IP65 (wash-down) is available as an option. Contact Nidec Drive Technology for more details

*14) Weight may vary slightly between models

VRL 205 1-Stage Dimensions

Input bore size ≦φ38 mm

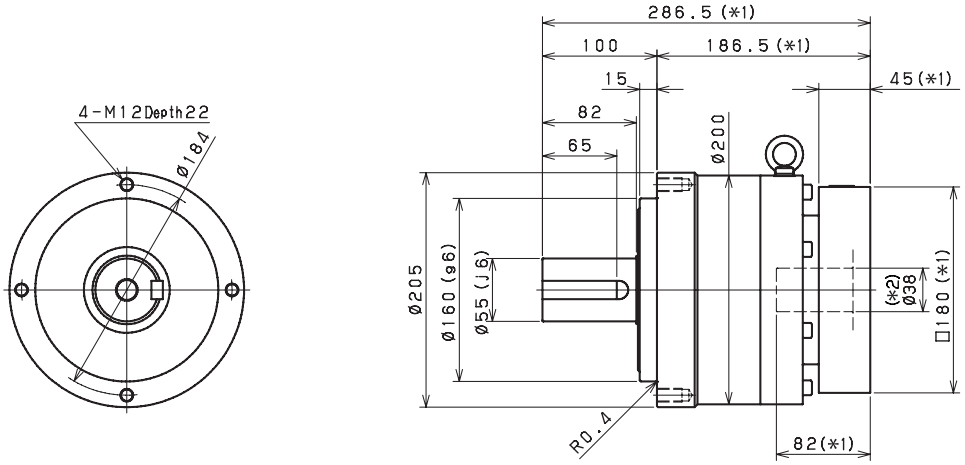

Input bore size ≦φ48 mm

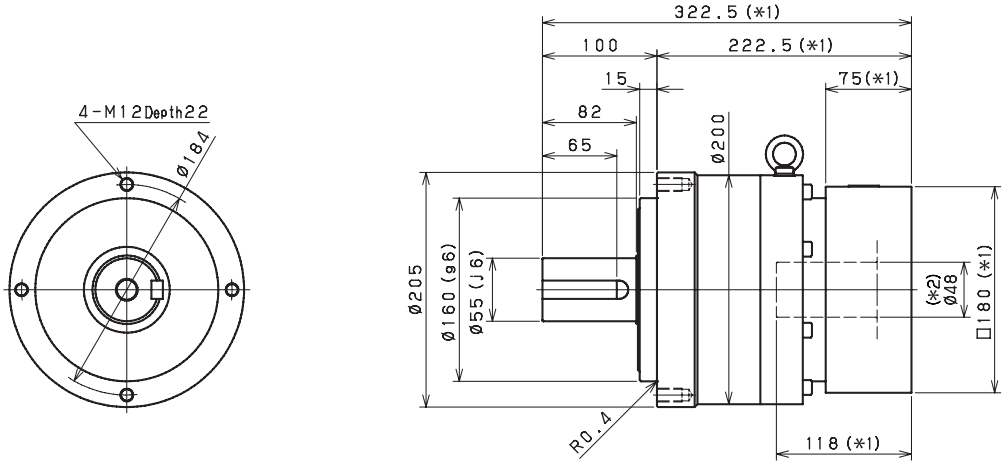

Input bore size ≦φ65 mm

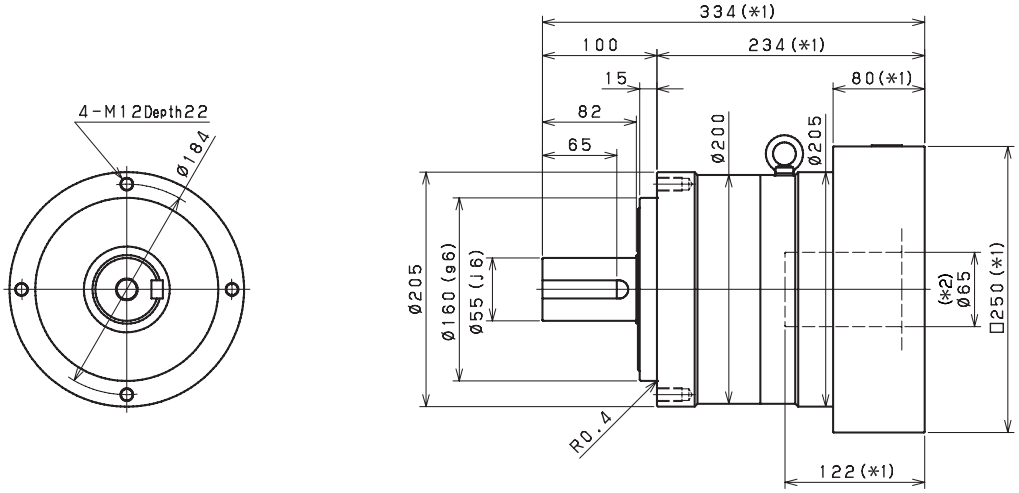

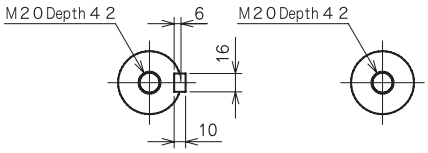

Keyed shaft　　Smooth shaft

*1) Length will vary depending on motor

*2) Bushing will be inserted to adapt to motor shaft

VRL 205 2-Stage Dimensions

Input bore size ≦φ28 mm

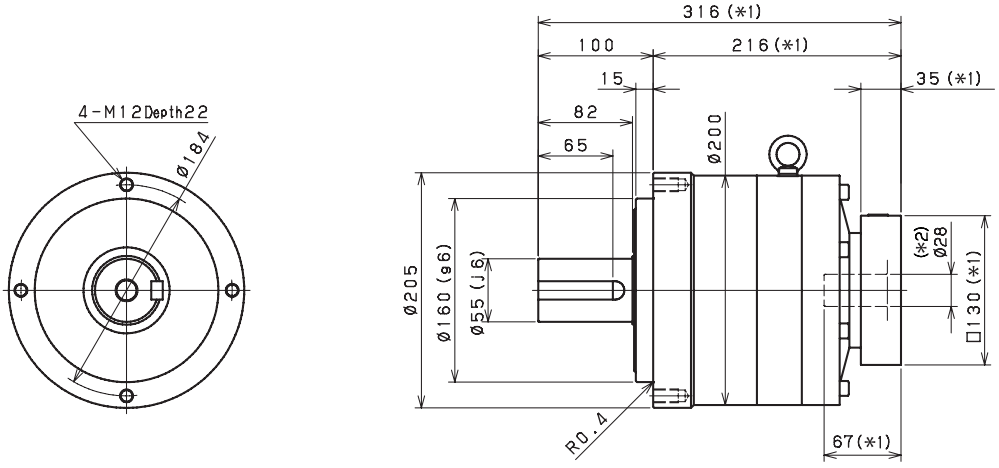

Input bore size ≦φ38 mm

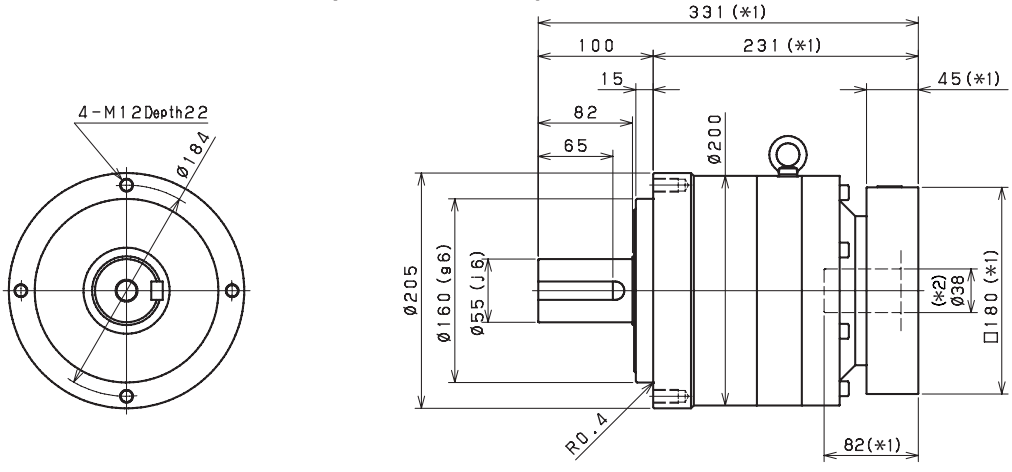

Input bore size ≦φ48 mm

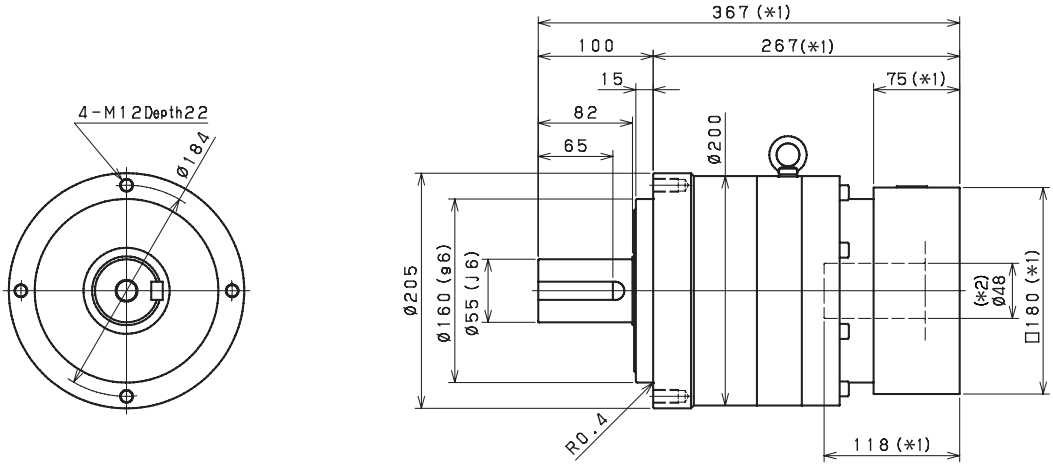

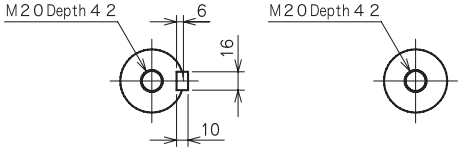

Keyed shaft　　Smooth shaft

*1) Length will vary depending on motor

*2) Bushing will be inserted to adapt to motor shaft

VRL 235 1-Stage Specifications

Frame Size	**235**									
Ratio	Unit	Note	3	4	5	6	7	8	9	10
Nominal Output Torque	[Nm]	*1	980	1400	1400	1600	1700	1700	1700	1700
Maximum Acceleration Torque	[Nm]	*2	2000	2900	2900	2900	2900	2900	2600	2200
Maximum Torque	[Nm]	*3	2400	3700	3700	3500	3500	3400	3000	2700
Emergency Stop Torque	[Nm]	*4	4000	5000	5000	5000	5000	5000	4000	4000
Nominal Input Speed	[rpm]	*5	1200	1200	1500	1500	1700	1700	2000	2000
Maximum Input Speed	[rpm]	*6	3000	3000	3000	3000	3000	3000	3000	3000
No Load Running Torque	[Nm]	*7	2.92							
Maximum Radial Load	[N]	*8	15000							
Maximum Axial Load	[N]	*9	14000							
Moment of Inertia (≤ Ø 28)	[kgcm2]	--	--	--	--	--	--	--	--	--
Moment of Inertia (≤ Ø 38)	[kgcm2]	--	--	--	--	--	--	--	--	--
Moment of Inertia (≤ Ø 48)	[kgcm2]	--	110	54	42	35	33	30	29	28
Moment of Inertia (≤ Ø 65)	[kgcm2]	--	160	98	85	79	76	74	73	72
Efficiency	[%]	*10	95							
Torsional Rigidity	[Nm/arc-min]	*11	400							
Maximum Torsional Backlash	[arc-min]	--	≤ 5							
Noise Level	dB [A]	*12	≤ 61							
Protection Class	--	*13	IP54 (IP65)							
Ambient Temperature	[°C]	--	0-40							
Permitted Housing Temperature	[°C]	--	90							
Weight	[kg]	*14	55							

VRL 235 2-Stage Specifications

Frame Size	**235**									
Ratio	Unit	Note	15	16	20	25	28	30	35	40
Nominal Output Torque	[Nm]	*1	1100	1400	1500	1800	2000	1300	2000	2000
Maximum Acceleration Torque	[Nm]	*2	2000	2900	2900	2900	2900	2000	2900	2900
Maximum Torque	[Nm]	*3	2000	2900	2900	2900	2900	2000	2900	2900
Emergency Stop Torque	[Nm]	*4	4000	5000	5000	5000	5000	4000	5000	5000
Nominal Input Speed	[rpm]	*5	2200	2200	2200	2200	2200	2200	2200	2200
Maximum Input Speed	[rpm]	*6	4500	4500	4500	4500	4500	4500	4500	4500
No Load Running Torque	[Nm]	*7	1.14							
Maximum Radial Load	[N]	*8	15000							
Maximum Axial Load	[N]	*9	14000							
Moment of Inertia (≤ Ø 28)	[kgcm2]	--	--	--	--	--	--	--	--	--
Moment of Inertia (≤ Ø 38)	[kgcm2]	--	20	24	19	18	23	12	18	12
Moment of Inertia (≤ Ø 48)	[kgcm2]	--	34	39	33	33	37	26	32	26
Moment of Inertia (≤ Ø 65)	[kgcm2]	--	--	--	--	--	--	--	--	--
Efficiency	[%]	*10	90							
Torsional Rigidity	[Nm/arc-min]	*11	400							
Maximum Torsional Backlash	[arc-min]	--	≤ 5							
Noise Level	dB [A]	*12	≤ 61							
Protection Class	--	*13	IP54 (IP65)							
Ambient Temperature	[°C]	--	0-40							
Permitted Housing Temperature	[°C]	--	90							
Weight	[kg]	*14	57							

VRL 235 2-Stage Specifications

Frame Size	**235**								
Ratio	Unit	Note	45	50	60	70	80	90	100
Nominal Output Torque	[Nm]	*1	1300	2000	2000	2000	2000	1300	1300
Maximum Acceleration Torque	[Nm]	*2	1800	2900	2900	2900	2500	1800	1600
Maximum Torque	[Nm]	*3	1800	2900	2900	2900	2500	1800	1600
Emergency Stop Torque	[Nm]	*4	4000	5000	5000	5000	5000	4000	4000
Nominal Input Speed	[rpm]	*5	2200	2500	2500	3000	3000	3000	3000
Maximum Input Speed	[rpm]	*6	4500	4500	4500	4500	4500	4500	4500
No Load Running Torque	[Nm]	*7	1.14						
Maximum Radial Load	[N]	*8	15000						
Maximum Axial Load	[N]	*9	14000						
Moment of Inertia (≤ Ø 28)	[kgcm2]	--	--	4.7	4.7	4.6	4.6	4.6	4.6
Moment of Inertia (≤ Ø 38)	[kgcm2]	--	18	12	11	11	11	11	11
Moment of Inertia (≤ Ø 48)	[kgcm2]	--	32	26	26	26	26	26	26
Moment of Inertia (≤ Ø 65)	[kgcm2]	--	--	--	--	--	--	--	--
Efficiency	[%]	*10	90						
Torsional Rigidity	[Nm/arc-min]	*11	400						
Maximum Torsional Backlash	[arc-min]	--	≤ 5						
Noise Level	dB [A]	*12	≤ 61						
Protection Class	--	*13	IP54 (IP65)						
Ambient Temperature	[°C]	--	0-40						
Permitted Housing Temperature	[°C]	--	90						
Weight	[kg]	*14	57						

*1) At nominal input speed, service life is 20,000 hours

*2) The maximum torque when starting or stopping operation. Apply Cycle Factor $\mathbf{f_0}$, found on page 468, for higher duty cycle applications

*3) Permitted 10,000 times during service life. Based on 10% of maximum radial load and smooth output shaft

*4) The maximum torque allowed under a stress situation. Permitted 1,000 times during service life

*5) The average input speed at nominal input torque. Maintain housing temperature below permitted value

*6) The maximum intermittent input speed

*7) Torque at no load applied to the input shaft at nominal input speed

*8) The maximum radial load that the gearbox can accept

*9) The maximum axial load that the gearbox can accept

*10) The efficiency at the nominal output torque rating

*11) This does not include lost motion

*12) Contact Nidec Drive Technology for the testing conditions and environment

*13) IP65 (wash-down) is available as an option. Contact Nidec Drive Technology for more details

*14) Weight may vary slightly between models

VRL 235 1-Stage Dimensions

Input bore size ≦φ48 mm

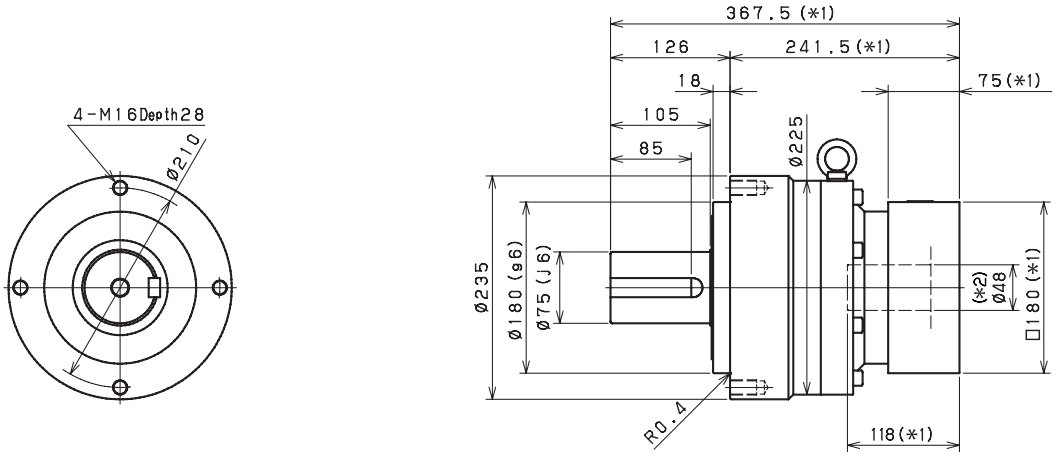

Input bore size ≦φ65 mm

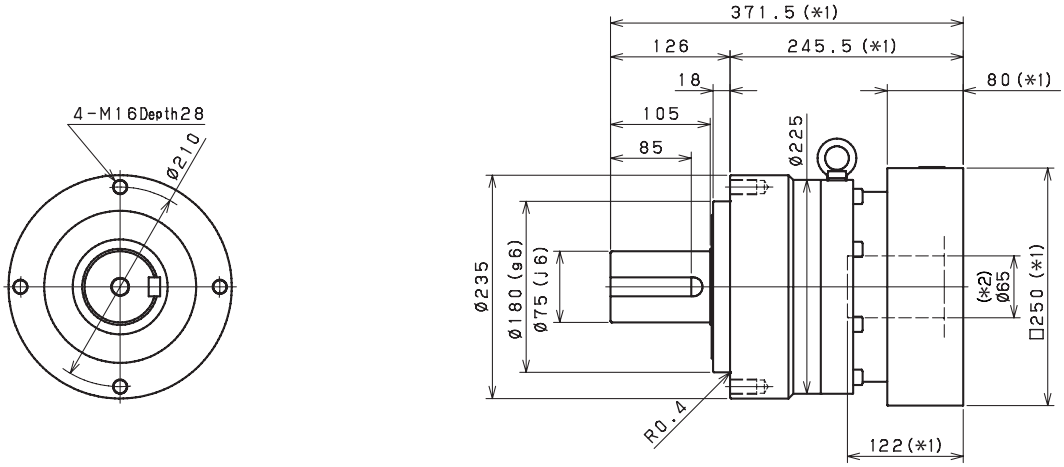

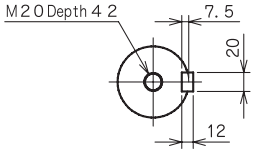

Keyed shaft

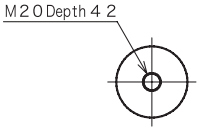

Smooth shaft

*1) Length will vary depending on motor

*2) Bushing will be inserted to adapt to motor shaft

VRL 235 2-Stage Dimensions

Input bore size ≦φ38 mm

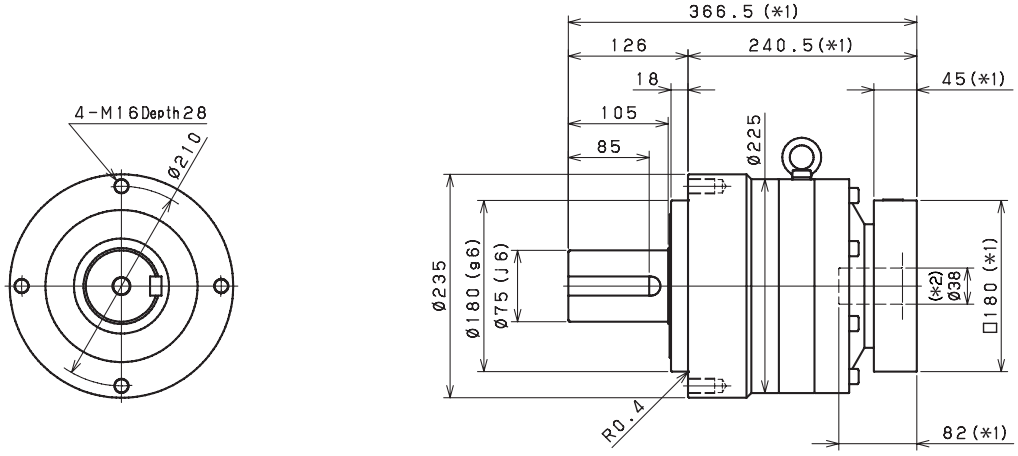

Input bore size ≦φ48 mm

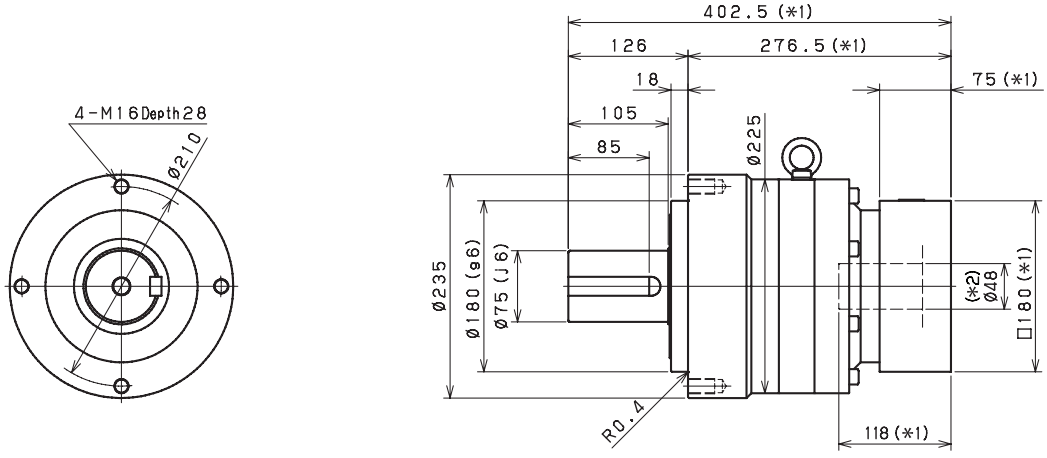

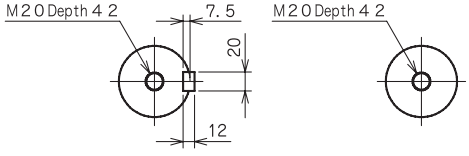

*1) Length will vary depending on motor

*2) Bushing will be inserted to adapt to motor shaft

VRB SERIES

A valuable alternative for applications requiring high positional accuracy and dynamic performance. The VRB is a <3 arc-min gearbox that offers a through hole mounting design, making it easier to assemble onto various equipment. This product is an ideal fit for various belt drive and actuator applications found throughout the packaging and assembly cell automation markets.

Various standard wash down and food grade options are available, making the VRB an attractive choice for the toughest environments. We offer the broadest selection of frame sizes and ratios, with immediate availability on most configurations. Industry standard mounting dimensions allow the VRB to be employed in legacy equipment designs, saving our customers time and money.

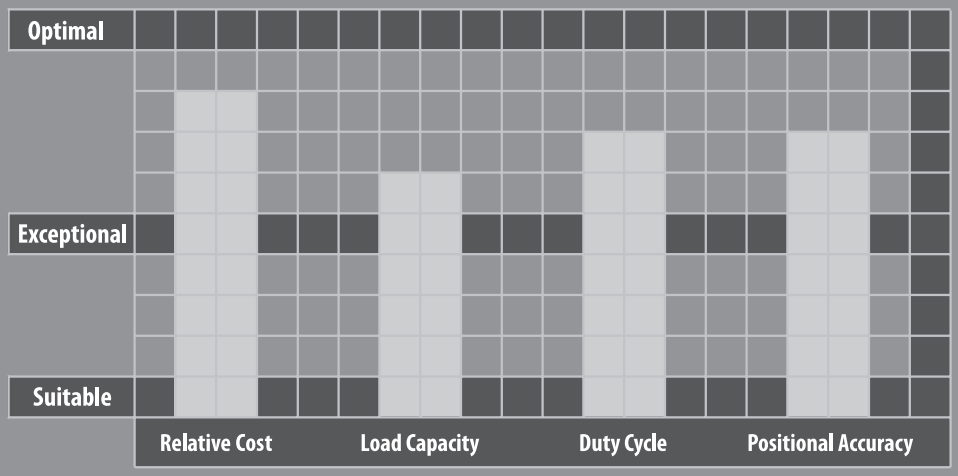

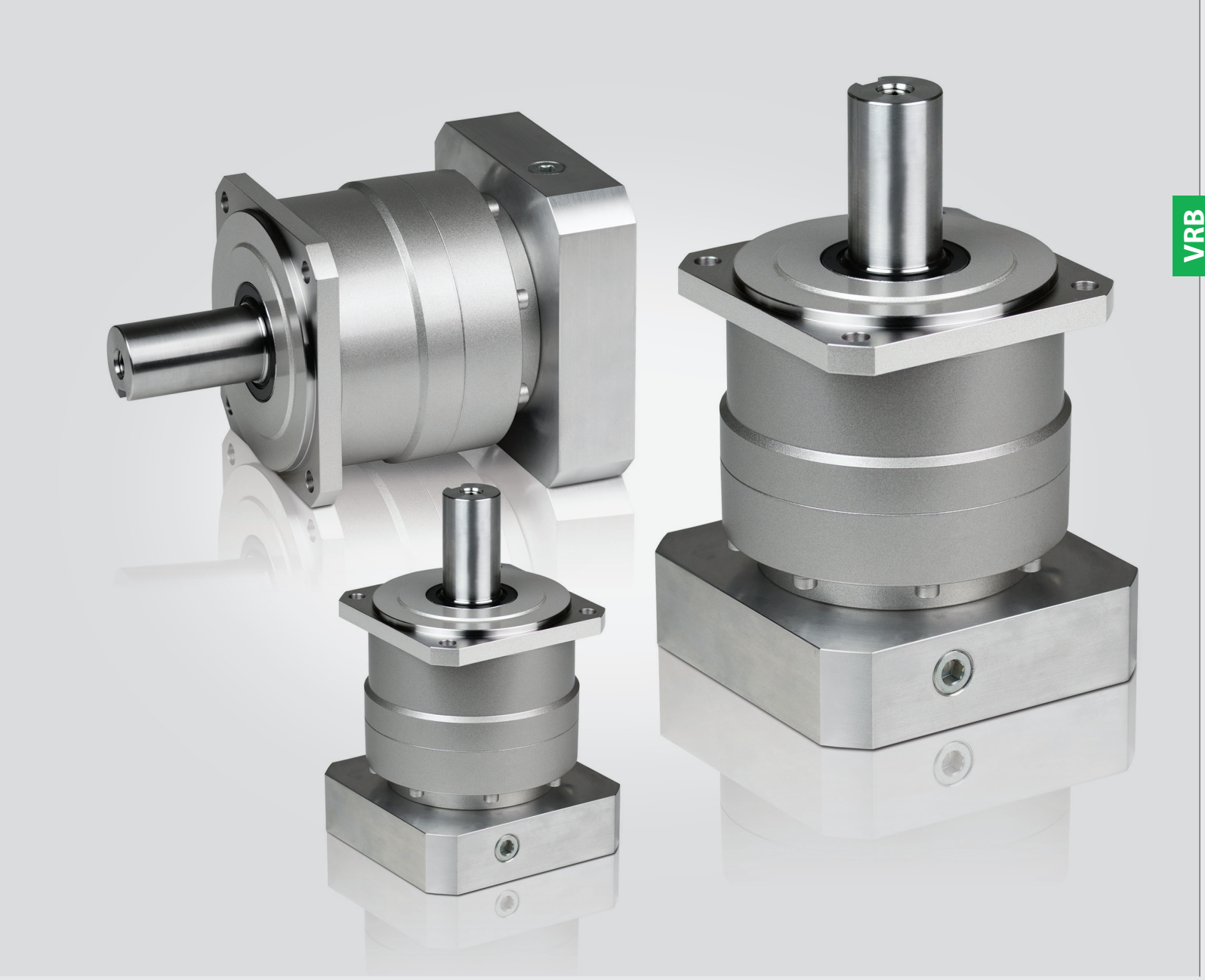

VRB SERIES

- Exceptional value for high end motion control applications with demanding accuracy requirements
- The widest range of frame sizes and ratios available in the market
- Best-In-class backlash (≤3 arc-min)
- Broad range of mounting adapters offer a simple, precise attachment to any motor
- Maintenance-free solution that is lubricated for life. High performance grease allows flexible mounting in any orientation
- Industry standard through-bolt mounting style
- Assembled in the USA, with immediate delivery

VRB Series Features

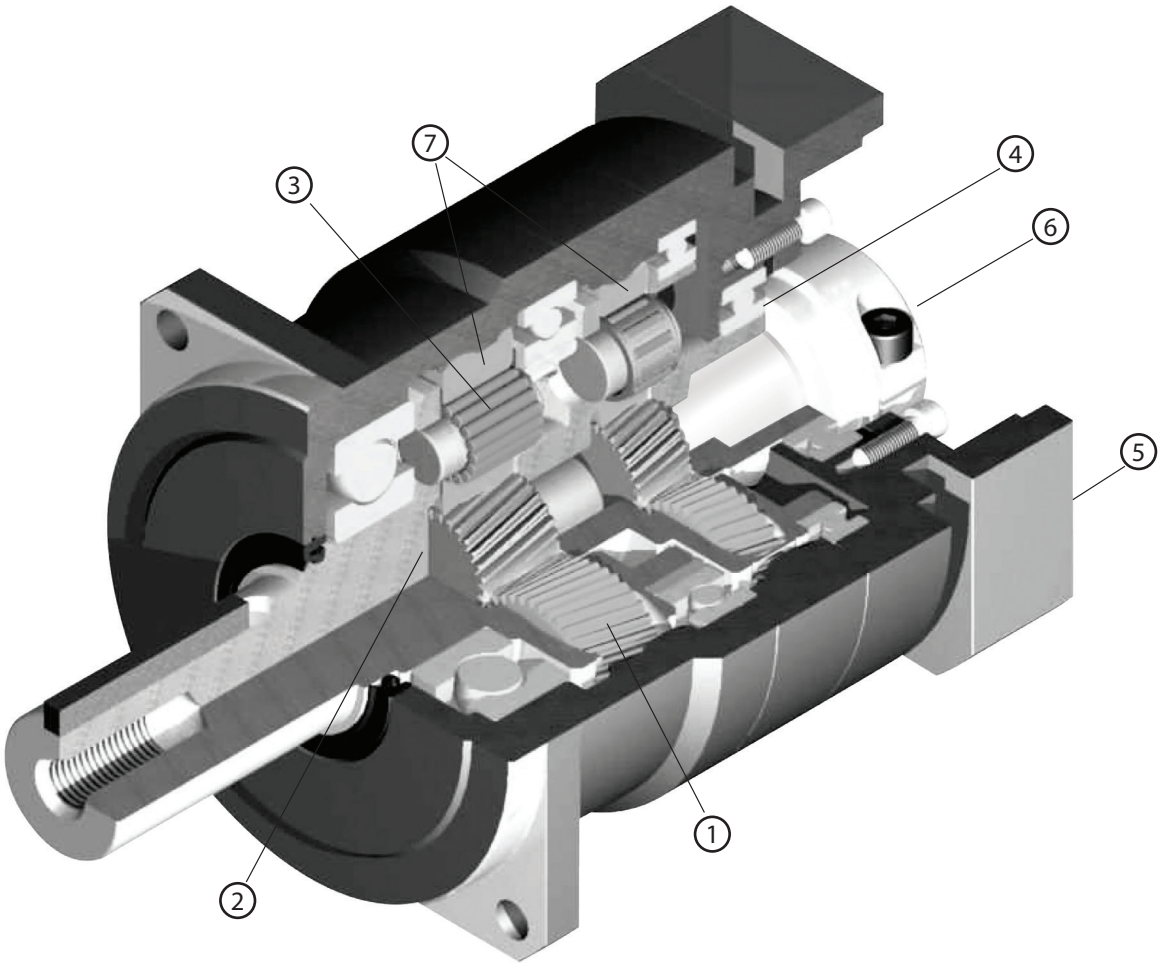

1. Carburized helical gears with proprietary secondary finishing process for higher accuracy and smooth, quiet operation. 40% higher tooth surface area than the industry standard
2. One piece output shaft and planet carrier with two bearings straddling the planet gears. Higher stiffness, torque capacity and safety factor, with guaranteed alignment of gearing
3. Uncaged needle roller bearings provide excellent torque density and torsional rigidity. 43% larger bearing surface area compared to the rest of the industry
4. Unique labyrinth input seal design greatly reduces heat and increases system efficiency. IP65 protection is available for wash down applications
5. Optimized mounting system with active centering on motor pilot diameter guarantees alignment of motor. Motor can be installed in any orientation
6. True concentric motor shaft clamping connection, optimized for your specific motor. Reduced inertia for dynamic performance and balanced for high speed operation
7. Ring gear machined directly into the housing, not welded or pressed in. Provides greater concentricity and elimination of speed fluctuation

VRB Series Model Code

VRB – 090 C – 7 – K 3 – 19HB16

- **19HB16** — Motor mounting code (*1)
- **3** — Backlash: ≤3 arc-min
- **K** — Output mounting style: K: Keyed shaft / S: Smooth shaft
- **7** — Ratio: 1-Stage: 3, 4, 5, 6, 7, 8, 9, 10 / 2-Stage: 15, 16, 20, 25, 28, 30, 35, 40, 45, 50, 60, 70, 80, 90, 100
- **C** — Design version
- **090** — Frame size: 042, 060, 090, 115, 140, 180, 220
- **VRB** — Series

*1) Motor mounting code varies depending on the motor. Use the selection tool link below to configure the code.

Contact us for additional information or refer to our online gearhead selection tool.

Selection tool https://www.nidec-drivetechnology.co.jp/selection/all/

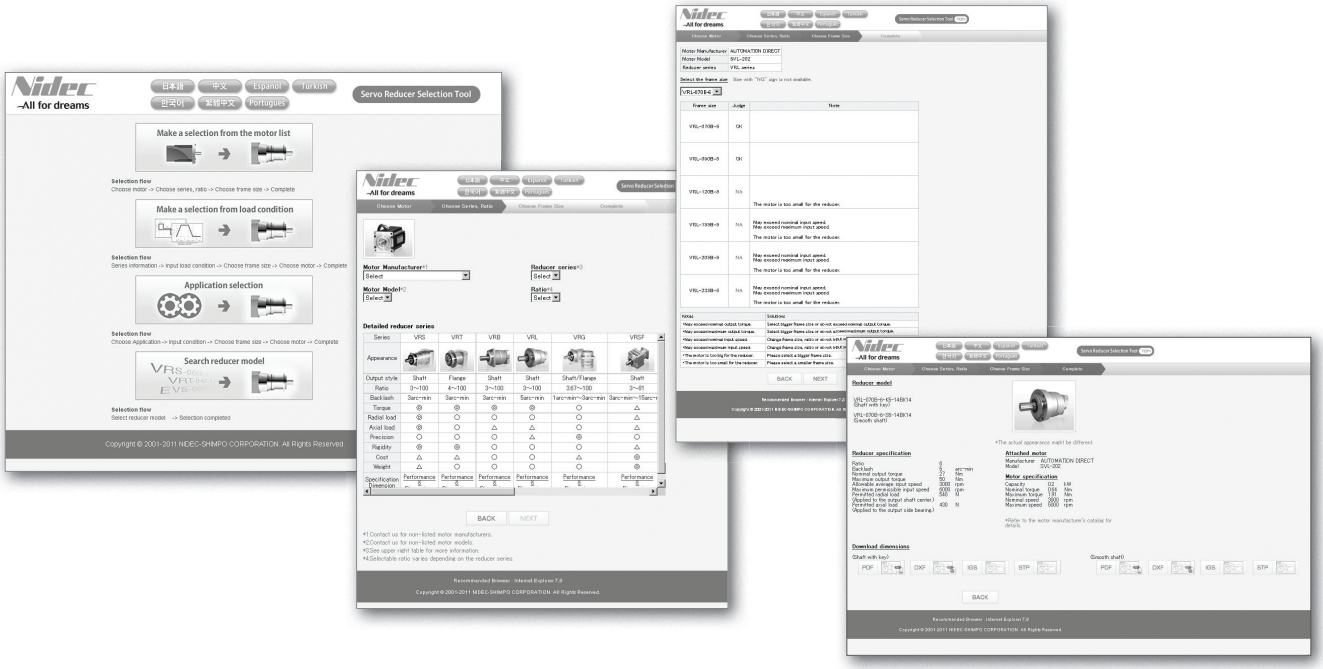

VRB 042 1-Stage Specifications

Frame Size	**042**									
Ratio	Units	Notes	3	4	5	6	7	8	9	10
Nominal Output Torque	[Nm]	*1	6	9	10	10	10	10	10	10
Maximum Acceleration Torque	[Nm]	*2	14	21	21	21	21	21	14	14
Maximum Torque	[Nm]	*3	17	25	25	25	25	25	17	17
Emergency Stop Torque	[Nm]	*4	30	35	35	35	35	35	30	30
Nominal Input Speed	[rpm]	*5	4000	4000	4000	4000	4000	4000	4000	4000
Maximum Input Speed	[rpm]	*6	8000	8000	8000	8000	8000	8000	8000	8000
No Load Running Torque	[Nm]	*7	0.03							
Maximum Radial Load	[N]	*8	710							
Maximum Axial Load	[N]	*9	640							
Moment of Inertia (≤Ø 8)	[kgcm2]	--	0.053	0.041	0.036	0.034	0.032	0.031	0.031	0.030
Moment of Inertia (≤ Ø 14)	[kgcm2]	--	0.17	0.16	0.15	0.15	0.15	0.15	0.15	0.15
Efficiency	[%]	*10	95							
Torsional Rigidity	[Nm/arc-min]	*11	2							
Maximum Torsional Backlash	[arc-min]	--	≤ 3							
Noise Level	dB [A]	*12	≤ 61							
Protection Class	--	*13	IP54 (IP65)							
Ambient Temperature	[°C]	--	0-40							
Permitted Housing Temperature	[°C]	--	90							
Weight	[kg]	*14	0.6							

VRB 042 2-Stage Specifications

Frame Size	**042**									
Ratio	Units	Notes	15	16	20	25	28	30	35	40
Nominal Output Torque	[Nm]	*1	9	14	14	15	15	11	15	15
Maximum Acceleration Torque	[Nm]	*2	14	21	21	21	21	14	21	21
Maximum Torque	[Nm]	*3	14	21	21	21	21	14	21	21
Emergency Stop Torque	[Nm]	*4	30	35	35	35	35	30	35	35
Nominal Input Speed	[rpm]	*5	4000	4000	4000	4000	4000	4000	4000	4000
Maximum Input Speed	[rpm]	*6	8500	8500	8500	8500	8500	8500	8500	8500
No Load Running Torque	[Nm]	*7	0.01							
Maximum Radial Load	[N]	*8	710							
Maximum Axial Load	[N]	*9	640							
Moment of Inertia (≤Ø 8)	[kgcm2]	--	0.035	0.038	0.034	0.034	0.038	0.030	0.034	0.030
Moment of Inertia (≤ Ø 14)	[kgcm2]	--	--	--	--	--	--	--	--	--
Efficiency	[%]	*10	90							
Torsional Rigidity	[Nm/arc-min]	*11	2							
Maximum Torsional Backlash	[arc-min]	--	≤ 5							
Noise Level	dB [A]	*12	≤ 61							
Protection Class	--	*13	IP54 (IP65)							
Ambient Temperature	[°C]	--	0-40							
Permitted Housing Temperature	[°C]	--	90							
Weight	[kg]	*14	0.7							

VRB 042 2-Stage Specifications

Frame Size	**042**								
Ratio	Units	Notes	45	50	60	70	80	90	100
Nominal Output Torque	[Nm]	*1	11	15	15	15	15	11	11
Maximum Acceleration Torque	[Nm]	*2	14	21	21	21	21	14	14
Maximum Torque	[Nm]	*3	14	21	21	21	21	14	14
Emergency Stop Torque	[Nm]	*4	30	35	35	35	35	30	30
Nominal Input Speed	[rpm]	*5	4000	4000	4000	4000	4000	4000	4000
Maximum Input Speed	[rpm]	*6	8500	8500	8500	8500	8500	8500	8500
No Load Running Torque	[Nm]	*7	0.01						
Maximum Radial Load	[N]	*8	710						
Maximum Axial Load	[N]	*9	640						
Moment of Inertia (≤Ø 8)	[kgcm2]	--	0.034	0.030	0.030	0.030	0.030	0.030	0.030
Moment of Inertia (≤ Ø 14)	[kgcm2]	--	--	--	--	--	--	--	--
Efficiency	[%]	*10	90						
Torsional Rigidity	[Nm/arc-min]	*11	2						
Maximum Torsional Backlash	[arc-min]	--	≤ 5						
Noise Level	dB [A]	*12	≤ 61						
Protection Class	--	*13	IP54 (IP65)						
Ambient Temperature	[°C]	--	0-40						
Permitted Housing Temperature	[°C]	--	90						
Weight	[kg]	*14	0.7						

*1) At nominal input speed, service life is 20,000 hours

*2) The maximum torque when starting or stopping operation. Apply Cycle Factor f_0, found on page 468, for higher duty cycle applications

*3) Permitted 10,000 times during service life. Based on 10% of maximum radial load and smooth output shaft

*4) The maximum torque allowed under a stress situation. Permitted 1,000 times during service life

*5) The average input speed at nominal input torque. Maintain housing temperature below permitted value

*6) The maximum intermittent input speed

*7) Torque at no load applied to the input shaft at nominal input speed

*8) The maximum radial load that the gearbox can accept

*9) The maximum axial load that the gearbox can accept

*10) The efficiency at the nominal output torque rating

*11) This does not include lost motion

*12) Contact Nidec Drive Technology for the testing conditions and environment

*13) IP65 (wash-down) is available as an option. Contact Nidec Drive Technology for more details

*14) Weight may vary slightly between models

VRB 042 1-Stage Dimensions

Input bore size ≦φ8 mm

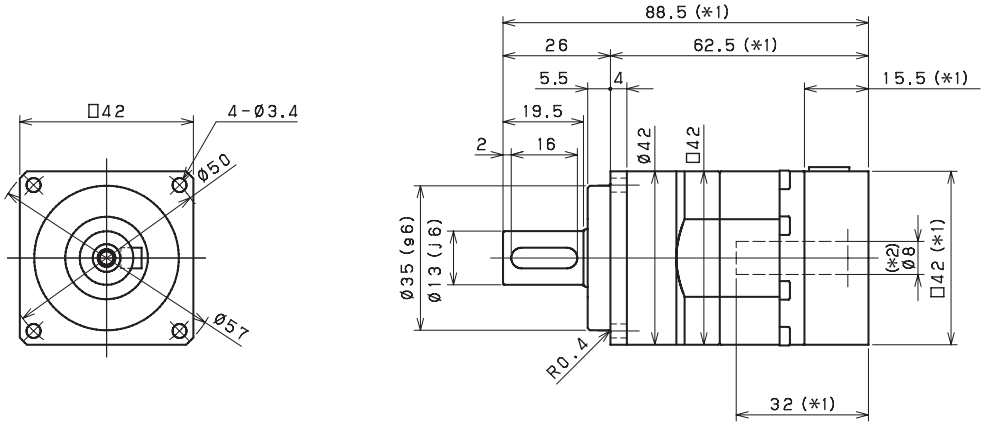

Input bore size ≦φ14 mm

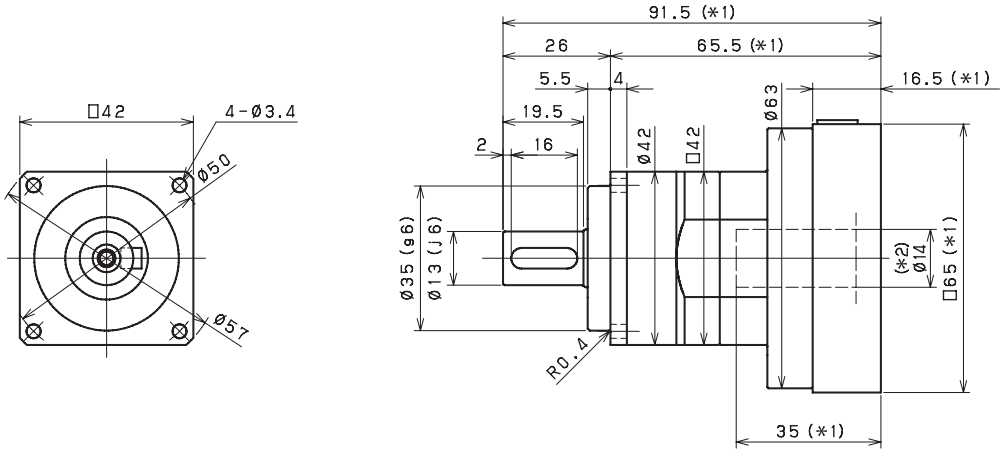

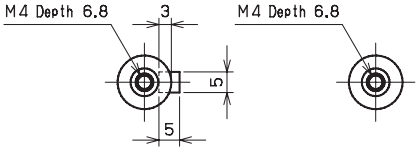

Keyed shaft　　Smooth shaft

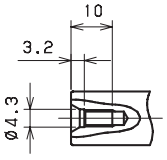

*1) Length will vary depending on motor

*2) Bushing will be inserted to adapt to motor shaft

VRB 042 2-Stage Dimensions

Input bore size ≦φ8 mm

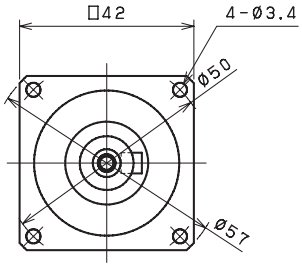

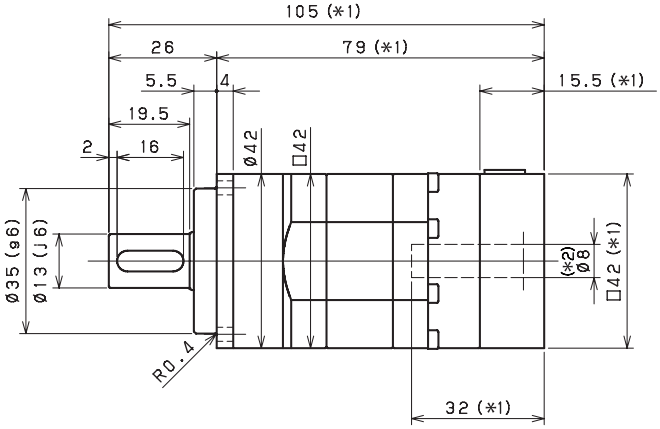

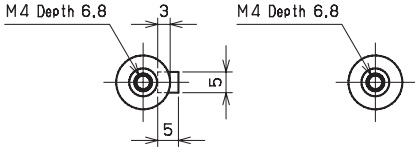

Keyed shaft Smooth shaft

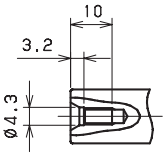

*1) Length will vary depending on motor

*2) Bushing will be inserted to adapt to motor shaft

VRB 060 1-Stage Specifications

Frame Size	**060**									
Ratio	Unit	Note	3	4	5	6	7	8	9	10
Nominal Output Torque	[Nm]	*1	19	27	28	28	28	28	28	28
Maximum Acceleration Torque	[Nm]	*2	46	66	66	66	66	66	46	46
Maximum Torque	[Nm]	*3	55	79	79	79	79	76	55	55
Emergency Stop Torque	[Nm]	*4	80	100	100	100	100	100	80	80
Nominal Input Speed	[rpm]	*5	3300	3300	4000	4000	4000	4000	4000	4000
Maximum Input Speed	[rpm]	*6	7500	7500	7500	7500	7500	7500	7500	7500
No Load Running Torque	[Nm]	*7	0.15							
Maximum Radial Load	[N]	*8	1200							
Maximum Axial Load	[N]	*9	1100							
Moment of Inertia (≤Ø 8)	[kgcm2]	--	0.14	0.095	0.077	0.068	0.062	0.059	0.057	0.056
Moment of Inertia (≤ Ø 14)	[kgcm2]	--	0.25	0.21	0.19	0.18	0.17	0.17	0.17	0.17
Moment of Inertia (≤ Ø 19)	[kgcm2]	--	0.53	0.48	0.46	0.46	0.45	0.45	0.44	0.44
Efficiency	[%]	*10	95							
Torsional Rigidity	[Nm/arc-min]	*11	3							
Maximum Torsional Backlash	[arc-min]	--	≤ 3							
Noise Level	dB [A]	*12	≤ 66							
Protection Class	--	*13	IP54 (IP65)							
Ambient Temperature	[°C]	--	0-40							
Permitted Housing Temperature	[°C]	--	90							
Weight	[kg]	*14	1.4							

VRB 060 2-Stage Specifications

Frame Size	**060**									
Ratio	Unit	Note	15	16	20	25	28	30	35	40
Nominal Output Torque	[Nm]	*1	25	32	32	43	45	32	45	45
Maximum Acceleration Torque	[Nm]	*2	46	66	66	66	66	46	66	66
Maximum Torque	[Nm]	*3	46	66	66	66	66	46	66	66
Emergency Stop Torque	[Nm]	*4	80	100	100	100	100	80	100	100
Nominal Input Speed	[rpm]	*5	4000	4000	4000	4000	4000	4000	4000	4000
Maximum Input Speed	[rpm]	*6	8500	8500	8500	8500	8500	8500	8500	8500
No Load Running Torque	[Nm]	*7	0.04							
Maximum Radial Load	[N]	*8	1200							
Maximum Axial Load	[N]	*9	1100							
Moment of Inertia (≤Ø 8)	[kgcm2]	--	0.064	0.070	0.062	0.061	0.068	0.051	0.061	0.051
Moment of Inertia (≤ Ø 14)	[kgcm2]	--	0.18	0.18	0.17	0.17	0.18	0.16	0.17	0.16
Moment of Inertia (≤ Ø 19)	[kgcm2]	--	0.45	0.46	0.45	0.45	0.46	0.44	0.45	0.44
Efficiency	[%]	*10	90							
Torsional Rigidity	[Nm/arc-min]	*11	3							
Maximum Torsional Backlash	[arc-min]	--	≤ 3							
Noise Level	dB [A]	*12	≤ 66							
Protection Class	--	*13	IP54 (IP65)							
Ambient Temperature	[°C]	--	0-40							
Permitted Housing Temperature	[°C]	--	90							
Weight	[kg]	*14	1.6							

VRB 060 2-Stage Specifications

Frame Size	**060**								
Ratio	Unit	Note	45	50	60	70	80	90	100
Nominal Output Torque	[Nm]	*1	32	45	45	45	45	32	32
Maximum Acceleration Torque	[Nm]	*2	46	66	66	66	66	46	46
Maximum Torque	[Nm]	*3	46	66	66	66	66	46	46
Emergency Stop Torque	[Nm]	*4	80	100	100	100	100	80	80
Nominal Input Speed	[rpm]	*5	4000	4800	4800	5500	5500	5500	5500
Maximum Input Speed	[rpm]	*6	8500	8500	8500	8500	8500	8500	8500
No Load Running Torque	[Nm]	*7	0.04						
Maximum Radial Load	[N]	*8	1200						
Maximum Axial Load	[N]	*9	1100						
Moment of Inertia (≤Ø 8)	[kgcm2]	--	0.061	0.051	0.051	0.051	0.051	0.051	0.051
Moment of Inertia (≤ Ø 14)	[kgcm2]	--	0.17	0.16	0.16	0.16	0.16	0.16	0.16
Moment of Inertia (≤ Ø 19)	[kgcm2]	--	0.45	0.44	0.44	0.44	0.44	0.44	0.44
Efficiency	[%]	*10	90						
Torsional Rigidity	[Nm/arc-min]	*11	3						
Maximum Torsional Backlash	[arc-min]	--	≤ 3						
Noise Level	dB [A]	*12	≤ 66						
Protection Class	--	*13	IP54 (IP65)						
Ambient Temperature	[°C]	--	0-40						
Permitted Housing Temperature	[°C]	--	90						
Weight	[kg]	*14	1.6						

*1) At nominal input speed, service life is 20,000 hours

*2) The maximum torque when starting or stopping operation. Apply Cycle Factor f_0, found on page 468, for higher duty cycle applications

*3) Permitted 10,000 times during service life. Based on 10% of maximum radial load and smooth output shaft

*4) The maximum torque allowed under a stress situation. Permitted 1,000 times during service life

*5) The average input speed at nominal input torque. Maintain housing temperature below permitted value

*6) The maximum intermittent input speed

*7) Torque at no load applied to the input shaft at nominal input speed

*8) The maximum radial load that the gearbox can accept

*9) The maximum axial load that the gearbox can accept

*10) The efficiency at the nominal output torque rating

*11) This does not include lost motion

*12) Contact Nidec Drive Technology for the testing conditions and environment

*13) IP65 (wash-down) is available as an option. Contact Nidec Drive Technology for more details

*14) Weight may vary slightly between models

VRB 060 1-Stage Dimensions

Input bore size ≦φ8 mm

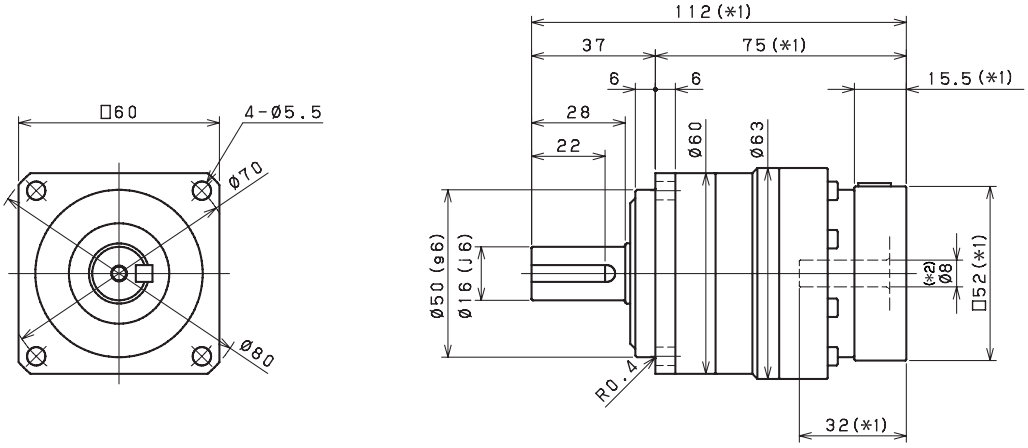

Input bore size ≦φ14 mm

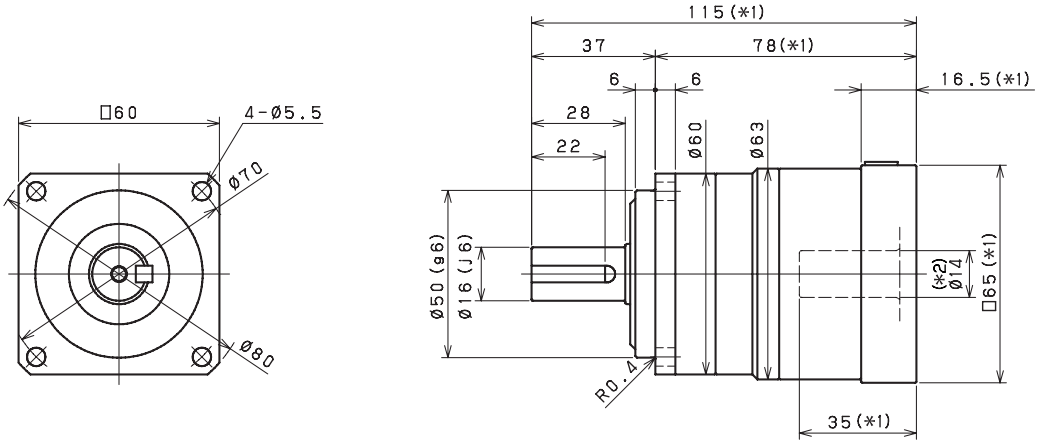

Input bore size ≦φ19 mm

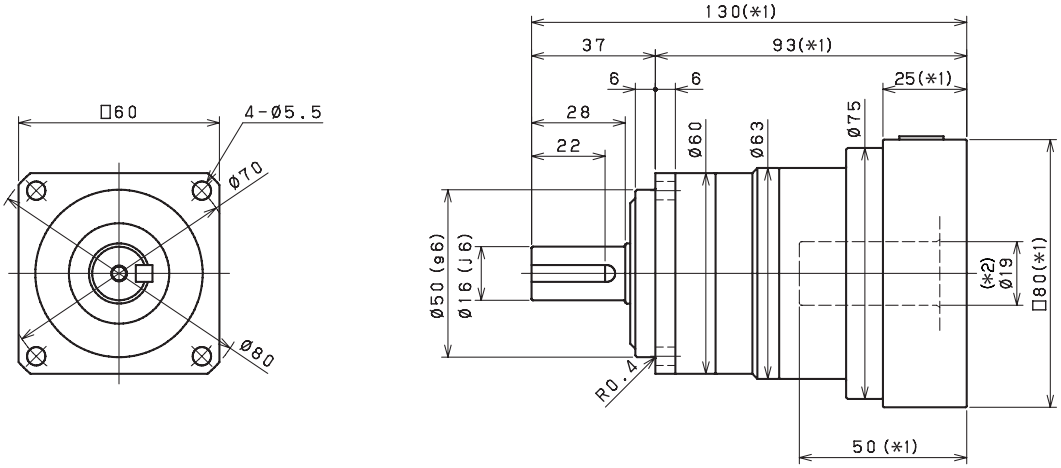

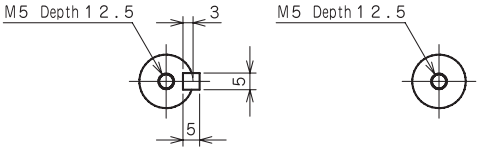

Keyed shaft　　Smooth shaft

*1) Length will vary depending on motor

*2) Bushing will be inserted to adapt to motor shaft

VRB 060 2-Stage Dimensions

Input bore size ≦φ8 mm

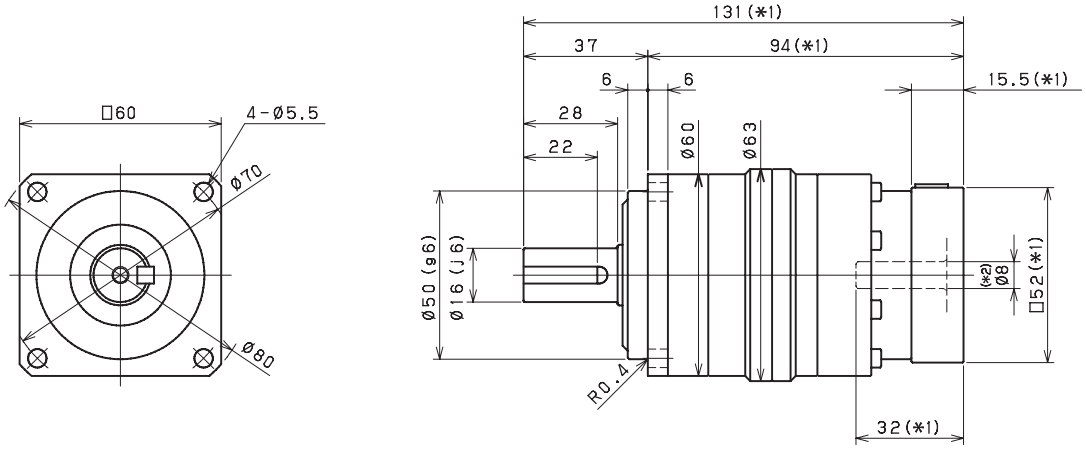

Input bore size ≦φ14 mm

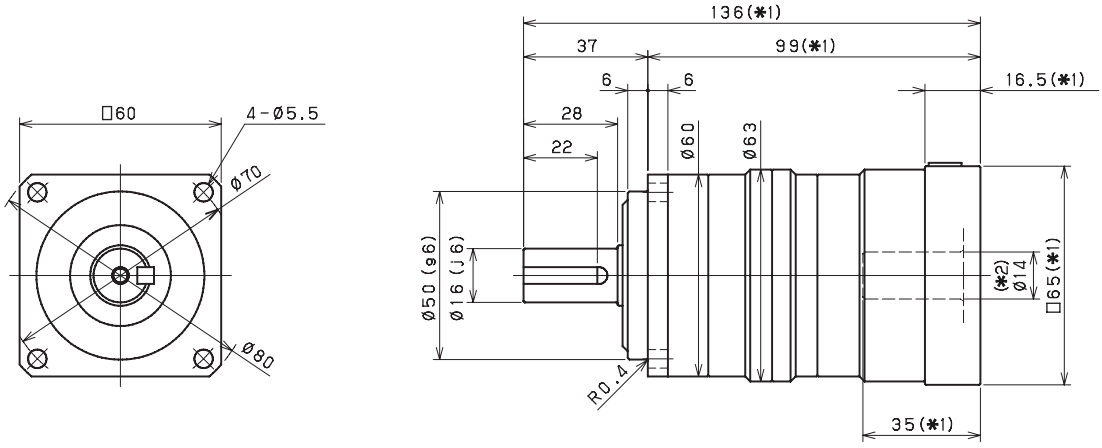

Input bore size ≦φ19 mm

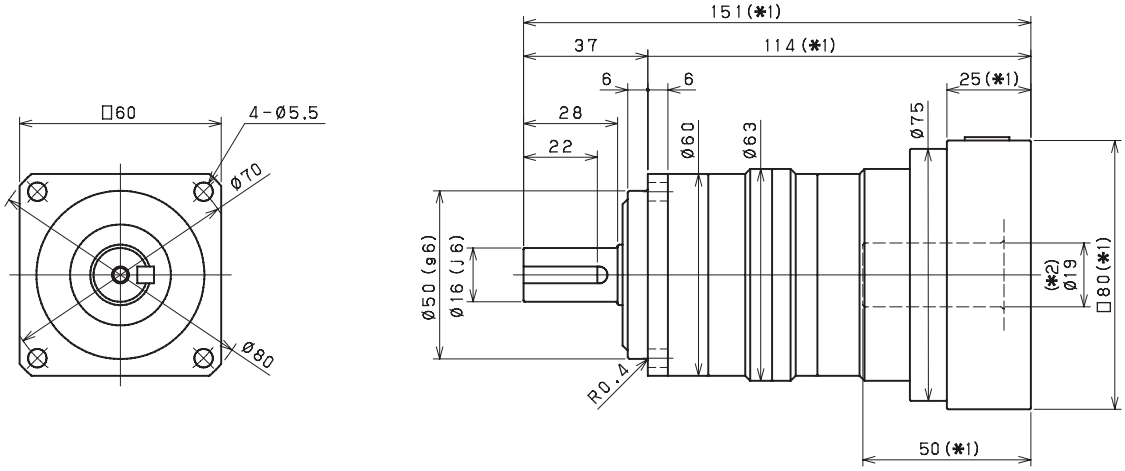

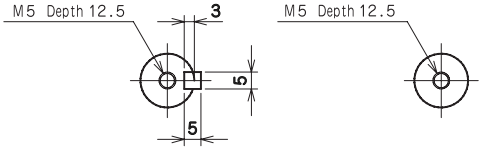

Keyed shaft　　Smooth shaft

*1) Length will vary depending on motor

*2) Bushing will be inserted to adapt to motor shaft

VRB 090 1-Stage Specifications

Frame Size	**090**									
Ratio	Unit	Note	3	4	5	6	7	8	9	10
Nominal Output Torque	[Nm]	*1	53	77	84	84	84	84	84	84
Maximum Acceleration Torque	[Nm]	*2	108	165	165	165	165	165	112	112
Maximum Torque	[Nm]	*3	135	200	200	195	195	190	145	145
Emergency Stop Torque	[Nm]	*4	200	250	250	250	250	250	200	200
Nominal Input Speed	[rpm]	*5	2900	2900	2900	2900	3100	3100	3100	3100
Maximum Input Speed	[rpm]	*6	7500	7500	7500	7500	7500	7500	7500	7500
No Load Running Torque	[Nm]	*7	0.35							
Maximum Radial Load	[N]	*8	2400							
Maximum Axial Load	[N]	*9	2200							
Moment of Inertia (≤ Ø 8)	[kgcm2]	--	--	--	--	--	--	--	--	--
Moment of Inertia (≤ Ø 14)	[kgcm2]	--	0.72	0.50	0.41	0.36	0.33	0.31	0.30	0.30
Moment of Inertia (≤ Ø 19)	[kgcm2]	--	1.1	0.90	0.80	0.75	0.73	0.71	0.70	0.70
Moment of Inertia (≤ Ø 28)	[kgcm2]	--	2.9	2.7	2.6	2.5	2.5	2.5	2.5	2.5
Efficiency	[%]	*10	95							
Torsional Rigidity	[Nm/arc-min]	*11	10							
Maximum Torsional Backlash	[arc-min]	--	≤ 3							
Noise Level	dB [A]	*12	≤ 67							
Protection Class	--	*13	IP54 (IP65)							
Ambient Temperature	[°C]	--	0-40							
Permitted Housing Temperature	[°C]	--	90							
Weight	[kg]	*14	3.7							

VRB 090 2-Stage Specifications

Frame Size	**090**									
Ratio	Unit	Note	15	16	20	25	28	30	35	40
Nominal Output Torque	[Nm]	*1	65	80	86	106	118	88	118	118
Maximum Acceleration Torque	[Nm]	*2	108	165	165	165	165	108	165	165
Maximum Torque	[Nm]	*3	108	165	165	165	165	108	165	165
Emergency Stop Torque	[Nm]	*4	200	250	250	250	250	200	250	250
Nominal Input Speed	[rpm]	*5	3500	3500	3500	3500	3500	3500	3500	3500
Maximum Input Speed	[rpm]	*6	8500	8500	8500	8500	8500	8500	8500	8500
No Load Running Torque	[Nm]	*7	0.06							
Maximum Radial Load	[N]	*8	2400							
Maximum Axial Load	[N]	*9	2200							
Moment of Inertia (≤ Ø 8)	[kgcm2]	--	0.20	0.25	0.19	0.19	0.24	0.12	0.18	0.11
Moment of Inertia (≤ Ø 14)	[kgcm2]	--	0.36	0.41	0.35	0.35	0.4	0.28	0.35	0.28
Moment of Inertia (≤ Ø 19)	[kgcm2]	--	0.75	0.79	0.74	0.74	0.78	0.67	0.73	0.67
Moment of Inertia (≤ Ø 28)	[kgcm2]	--	2.5	2.5	2.5	2.5	2.5	2.4	2.5	2.4
Efficiency	[%]	*10	90							
Torsional Rigidity	[Nm/arc-min]	*11	10							
Maximum Torsional Backlash	[arc-min]	--	≤ 3							
Noise Level	dB [A]	*12	≤ 67							
Protection Class	--	*13	IP54 (IP65)							
Ambient Temperature	[°C]	--	0-40							
Permitted Housing Temperature	[°C]	--	90							
Weight	[kg]	*14	4.2							

VRB 090 2-Stage Specifications

Frame Size	**090**								
Ratio	Unit	Note	45	50	60	70	80	90	100
Nominal Output Torque	[Nm]	*1	88	118	118	118	118	88	88
Maximum Acceleration Torque	[Nm]	*2	112	165	165	165	165	112	112
Maximum Torque	[Nm]	*3	112	165	165	165	165	112	112
Emergency Stop Torque	[Nm]	*4	200	250	250	250	250	200	200
Nominal Input Speed	[rpm]	*5	3500	3800	3800	4500	4500	4500	4500
Maximum Input Speed	[rpm]	*6	8500	8500	8500	8500	8500	8500	8500
No Load Running Torque	[Nm]	*7	0.06						
Maximum Radial Load	[N]	*8	2400						
Maximum Axial Load	[N]	*9	2200						
Moment of Inertia (≤ Ø 8)	[kgcm2]	--	0.18	0.11	0.11	0.11	0.11	0.11	0.11
Moment of Inertia (≤ Ø 14)	[kgcm2]	--	0.34	0.27	0.27	0.27	0.27	0.27	0.27
Moment of Inertia (≤ Ø 19)	[kgcm2]	--	0.73	0.67	0.67	0.67	0.67	0.67	0.67
Moment of Inertia (≤ Ø 28)	[kgcm2]	--	2.5	2.4	2.4	2.4	2.4	2.4	2.4
Efficiency	[%]	*10	90						
Torsional Rigidity	[Nm/arc-min]	*11	10						
Maximum Torsional Backlash	[arc-min]	--	≤ 3						
Noise Level	dB [A]	*12	≤ 67						
Protection Class	--	*13	IP54 (IP65)						
Ambient Temperature	[°C]	--	0-40						
Permitted Housing Temperature	[°C]	--	90						
Weight	[kg]	*14	4.2						

*1) At nominal input speed, service life is 20,000 hours

*2) The maximum torque when starting or stopping operation. Apply Cycle Factor f_0, found on page 468, for higher duty cycle applications

*3) Permitted 10,000 times during service life. Based on 10% of maximum radial load and smooth output shaft

*4) The maximum torque allowed under a stress situation. Permitted 1,000 times during service life

*5) The average input speed at nominal input torque. Maintain housing temperature below permitted value

*6) The maximum intermittent input speed

*7) Torque at no load applied to the input shaft at nominal input speed

*8) The maximum radial load that the gearbox can accept

*9) The maximum axial load that the gearbox can accept

*10) The efficiency at the nominal output torque rating

*11) This does not include lost motion

*12) Contact Nidec Drive Technology for the testing conditions and environment

*13) IP65 (wash-down) is available as an option. Contact Nidec Drive Technology for more details

*14) Weight may vary slightly between models

VRB 090 1-Stage Dimensions

Input bore size ≦φ14 mm

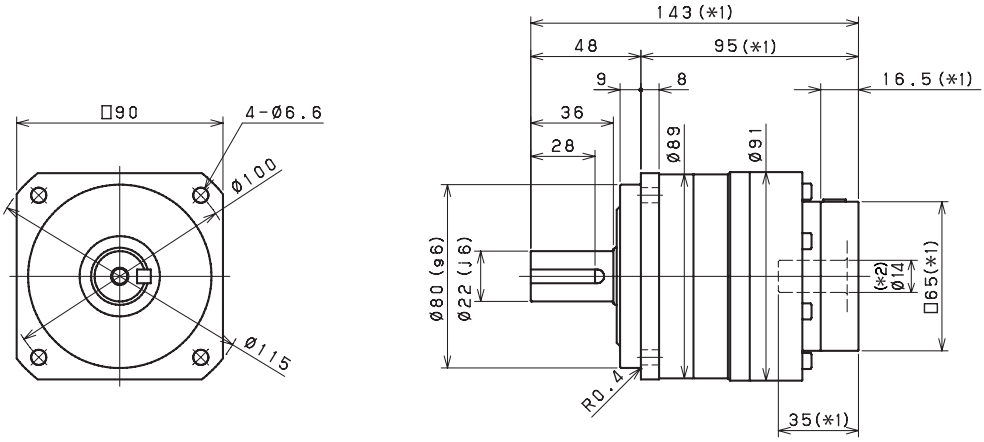

Input bore size ≦φ19 mm

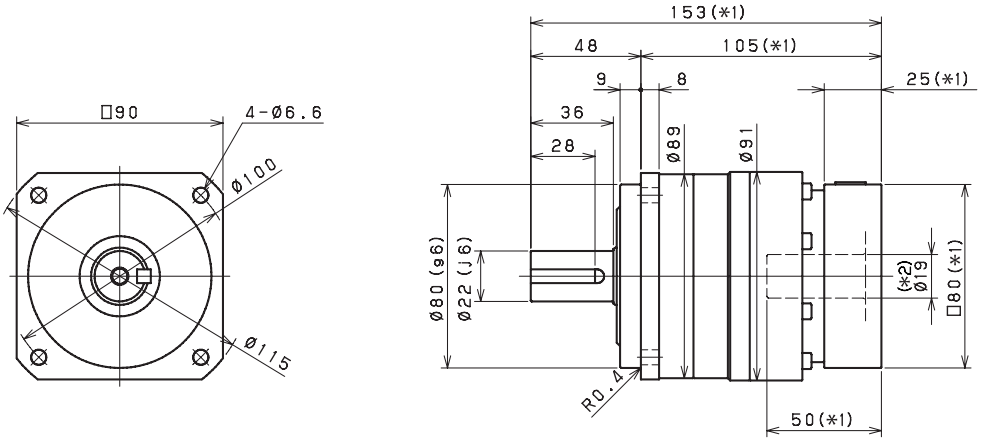

Input bore size ≦φ28 mm

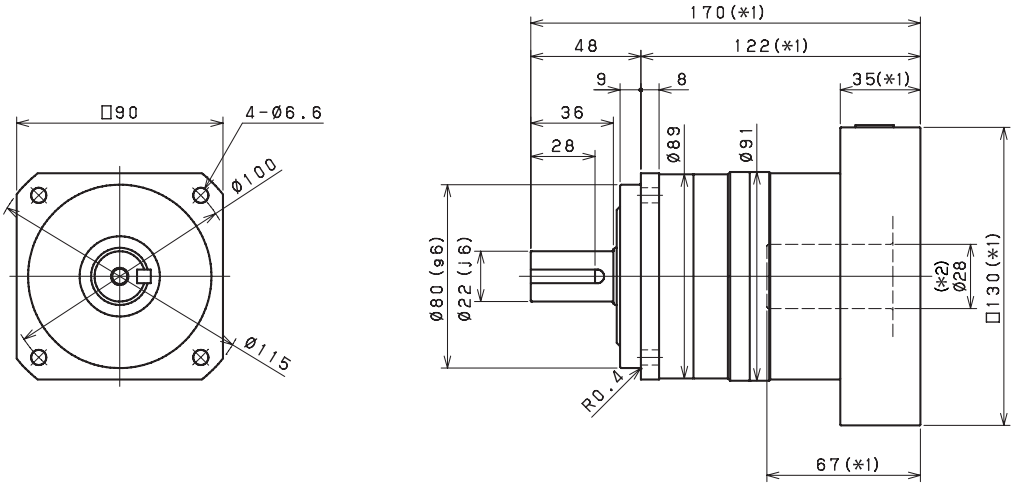

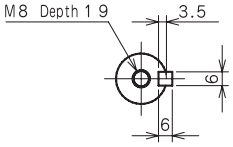

Keyed shaft

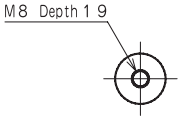

Smooth shaft

*1) Length will vary depending on motor

*2) Bushing will be inserted to adapt to motor shaft

VRB 090 2-Stage Dimensions

Input bore size ≦φ8 mm

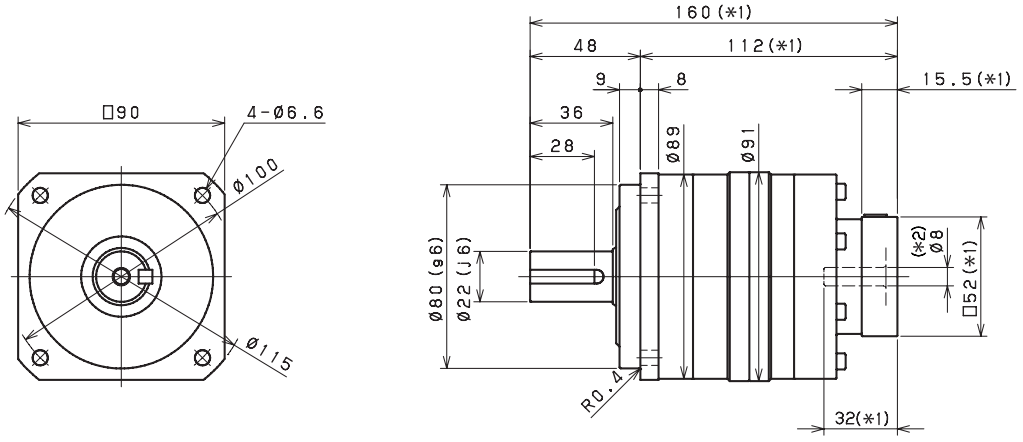

Input bore size ≦φ14 mm

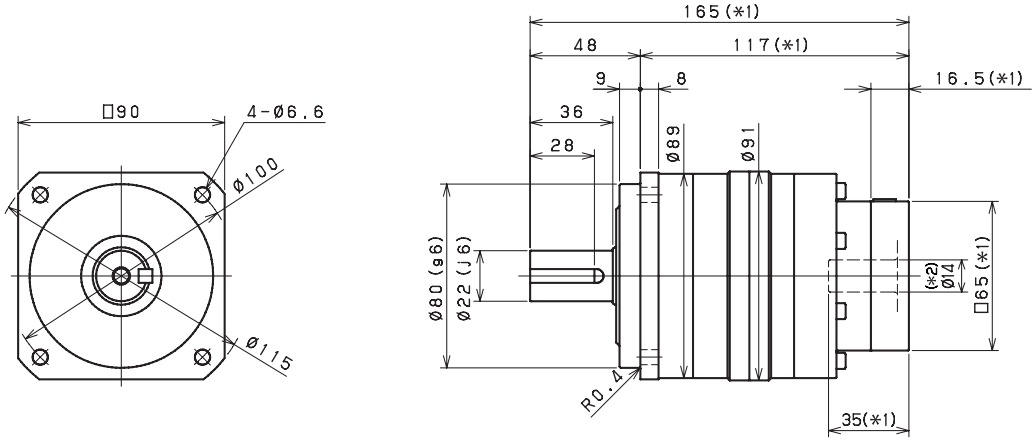

Input bore size ≦φ19 mm (*3)

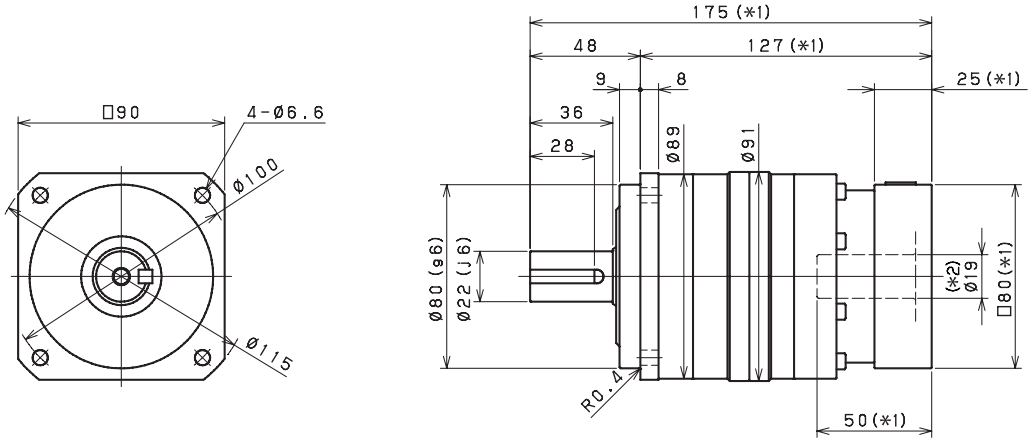

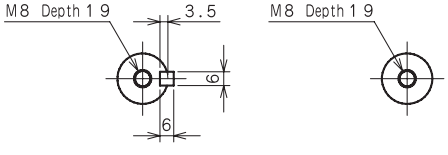

Keyed shaft　　Smooth shaft

*1) Length will vary depending on motor

*2) Bushing will be inserted to adapt to motor shaft

*3) 28mm input bore is available for this frame size. Use our online configurator to make your selection or contact us for assistance

VRB 115 1-Stage Specifications

Frame Size	**115**									
Ratio	Unit	Note	3	4	5	6	7	8	9	10
Nominal Output Torque	[Nm]	*1	128	146	190	190	190	190	190	190
Maximum Acceleration Torque	[Nm]	*2	270	390	390	390	390	390	292	292
Maximum Torque (new)	--	*3	340	490	490	480	480	480	370	370
Emergency Stop Torque	[Nm]	*4	500	625	625	625	625	625	500	500
Nominal Input Speed	[rpm]	*5	2800	2800	2800	2800	2800	2800	2800	2800
Maximum Input Speed	[rpm]	*6	5500	5500	5500	5500	5500	5500	5500	5500
No Load Running Torque	[Nm]	*7	1.30							
Maximum Radial Load	[N]	*8	4300							
Maximum Axial Load	[N]	*9	3900							
Moment of Inertia (≤ Ø 8)	[kgcm2]	--	--	--	--	--	--	--	--	--
Moment of Inertia (≤ Ø 14)	[kgcm2]	--	--	--	--	--	--	--	--	--
Moment of Inertia (≤ Ø 19)	[kgcm2]	--	3.2	2.0	1.4	1.2	1.0	0.92	0.86	0.83
Moment of Inertia (≤ Ø 28)	[kgcm2]	--	5.1	3.7	3.1	2.9	2.8	2.7	2.6	2.6
Moment of Inertia (≤ Ø 38)	[kgcm2]	--	12	10	9.5	9.3	9.1	9.0	8.9	8.9
Efficiency	[%]	*10	95							
Torsional Rigidity	[Nm/arc-min]	*11	31							
Maximum Torsional Backlash	[arc-min]	--	≤ 3							
Noise Level	dB [A]	*12	≤ 71							
Protection Class	--	*13	IP54 (IP65)							
Ambient Temperature	[°C]	--	0-40							
Permitted Housing Temperature	[°C]	--	90							
Weight	[kg]	*14	8							

VRB 115 2-Stage Specifications

Frame Size	**115**									
Ratio	Unit	Note	15	16	20	25	28	30	35	40
Nominal Output Torque	[Nm]	*1	174	200	220	280	280	220	280	270
Maximum Acceleration Torque	[Nm]	*2	270	390	390	390	390	270	390	390
Maximum Torque (new)	--	*3	270	390	390	390	390	270	390	390
Emergency Stop Torque	[Nm]	*4	500	625	625	625	625	500	625	625
Nominal Input Speed	[rpm]	*5	3100	3100	3100	3100	3100	3100	3100	3100
Maximum Input Speed	[rpm]	*6	6500	6500	6500	6500	6500	6500	6500	6500
No Load Running Torque	[Nm]	*7	0.42	--	--	--	--	--	--	--
Maximum Radial Load	[N]	*8	4300	--	--	--	--	--	--	--
Maximum Axial Load	[N]	*9	3900	--	--	--	--	--	--	--
Moment of Inertia (≤ Ø 8)	[kgcm2]	--	--	--	--	--	--	--	--	--
Moment of Inertia (≤ Ø 14)	[kgcm2]	--	0.77	0.98	0.72	0.70	0.92	0.38	0.68	0.37
Moment of Inertia (≤ Ø 19)	[kgcm2]	--	1.2	1.4	1.1	1.1	1.3	0.78	1.1	0.77
Moment of Inertia (≤ Ø 28)	[kgcm2]	--	2.9	3.1	2.8	2.8	3.0	2.5	2.8	2.5
Moment of Inertia (≤ Ø 38)	[kgcm2]	--	9.2	9.4	9.1	9.1	9.3	8.8	9.1	8.8
Efficiency	[%]	*10	90							
Torsional Rigidity	[Nm/arc-min]	*11	31							
Maximum Torsional Backlash	[arc-min]	--	≤ 3							
Noise Level	dB [A]	*12	≤ 71							
Protection Class	--	*13	IP54 (IP65)							
Ambient Temperature	[°C]	--	0-40							
Permitted Housing Temperature	[°C]	--	90							
Weight	[kg]	*14	8.9							

VRB 115 2-Stage Specifications

Frame Size	**115**								
Ratio	Unit	Note	45	50	60	70	80	90	100
Nominal Output Torque	[Nm]	*1	220	280	280	280	280	220	220
Maximum Acceleration Torque	[Nm]	*2	292	390	390	390	390	292	292
Maximum Torque (new)	--	*3	292	390	390	390	390	292	292
Emergency Stop Torque	[Nm]	*4	500	625	625	625	625	500	500
Nominal Input Speed	[rpm]	*5	3100	3500	3500	4200	4200	4200	4200
Maximum Input Speed	[rpm]	*6	6500	6500	6500	6500	6500	6500	6500
No Load Running Torque	[Nm]	*7	0.42	--	--	--	--	--	--
Maximum Radial Load	[N]	*8	4300	--	--	--	--	--	--
Maximum Axial Load	[N]	*9	3900	--	--	--	--	--	--
Moment of Inertia (≤ Ø 8)	[kgcm2]	--	--	0.19	0.19	0.19	0.19	0.19	0.19
Moment of Inertia (≤ Ø 14)	[kgcm2]	--	0.68	0.36	0.36	0.36	0.36	0.36	0.36
Moment of Inertia (≤ Ø 19)	[kgcm2]	--	1.1	0.76	0.76	0.76	0.76	0.76	0.76
Moment of Inertia (≤ Ø 28)	[kgcm2]	--	2.8	2.5	2.5	2.5	2.5	2.5	2.5
Moment of Inertia (≤ Ø 38)	[kgcm2]	--	9.1	8.8	8.8	8.8	8.8	8.8	8.8
Efficiency	[%]	*10	90						
Torsional Rigidity	[Nm/arc-min]	*11	31						
Maximum Torsional Backlash	[arc-min]	--	≤ 3						
Noise Level	dB [A]	*12	≤ 71						
Protection Class	--	*13	IP54 (IP65)						
Ambient Temperature	[°C]	--	0-40						
Permitted Housing Temperature	[°C]	--	90						
Weight	[kg]	*14	8.9						

*1) At nominal input speed, service life is 20,000 hours

*2) The maximum torque when starting or stopping operation. Apply Cycle Factor f_0, found on page 468, for higher duty cycle applications

*3) Permitted 10,000 times during service life. Based on 10% of maximum radial load and smooth output shaft

*4) The maximum torque allowed under a stress situation. Permitted 1,000 times during service life

*5) The average input speed at nominal input torque. Maintain housing temperature below permitted value

*6) The maximum intermittent input speed

*7) Torque at no load applied to the input shaft at nominal input speed

*8) The maximum radial load that the gearbox can accept

*9) The maximum axial load that the gearbox can accept

*10) The efficiency at the nominal output torque rating

*11) This does not include lost motion

*12) Contact Nidec Drive Technology for the testing conditions and environment

*13) IP65 (wash-down) is available as an option. Contact Nidec Drive Technology for more details

*14) Weight may vary slightly between models

VRB 115 1-Stage Dimensions

Input bore size ≦φ19 mm

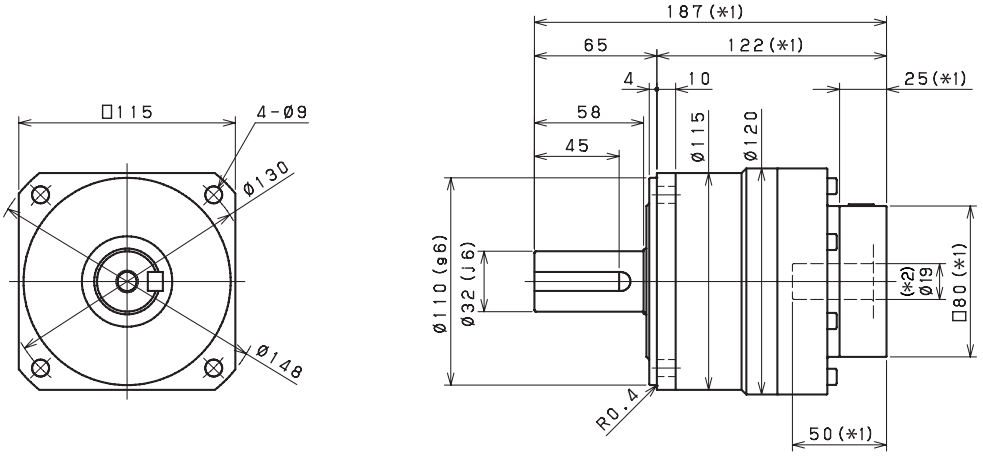

Input bore size ≦φ28 mm

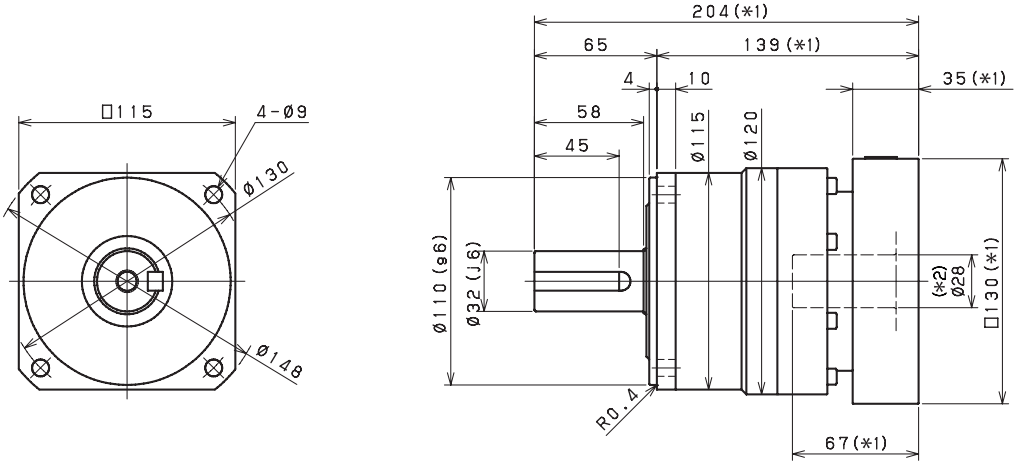

Input bore size ≦φ38 mm

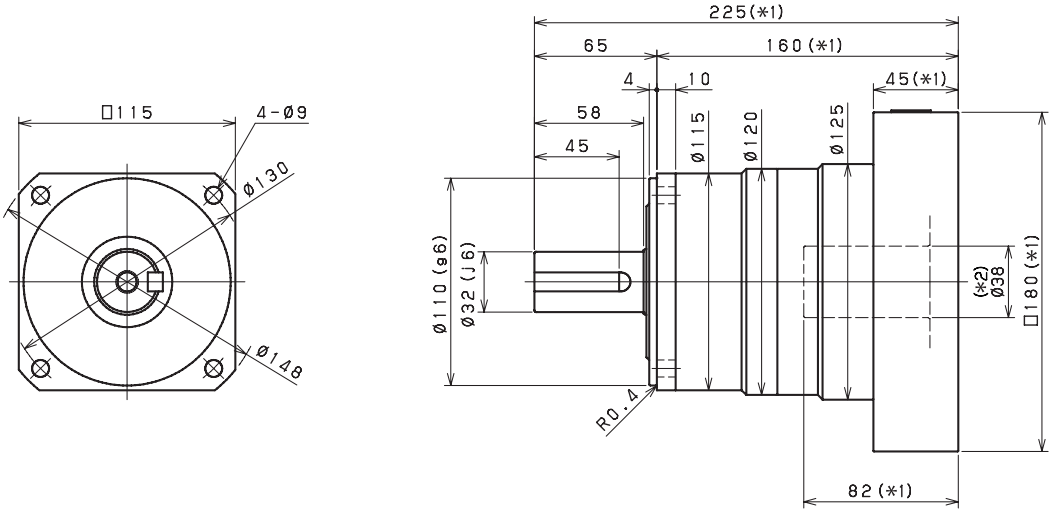

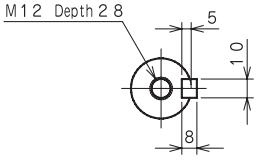

Keyed shaft

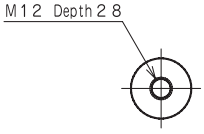

Smooth shaft

*1) Length will vary depending on motor

*2) Bushing will be inserted to adapt to motor shaft

VRB 115 2-Stage Dimensions

Input bore size ≦φ14 mm

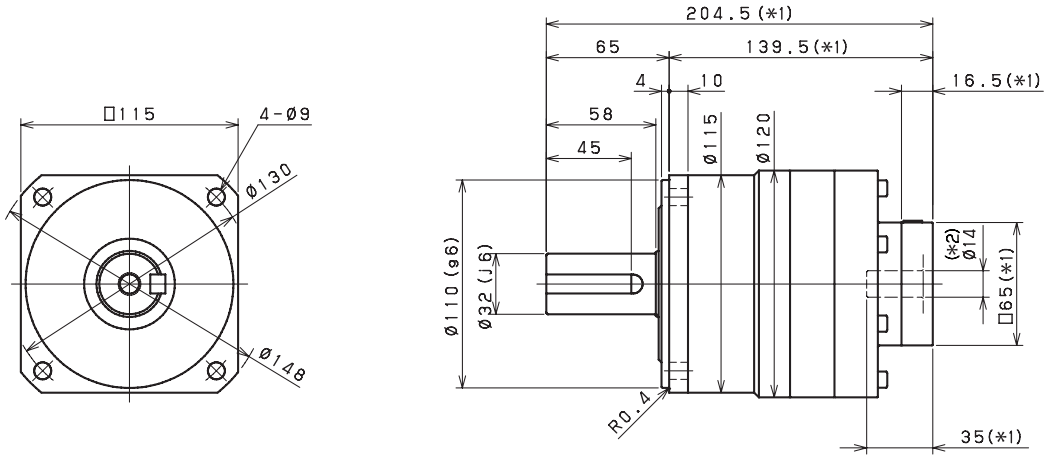

Input bore size ≦φ19 mm

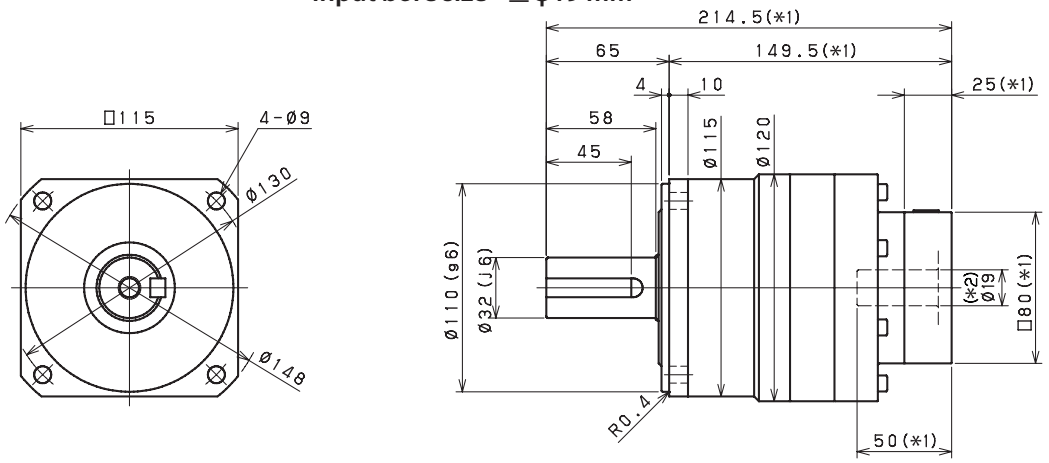

Input bore size ≦φ28 mm (*3)

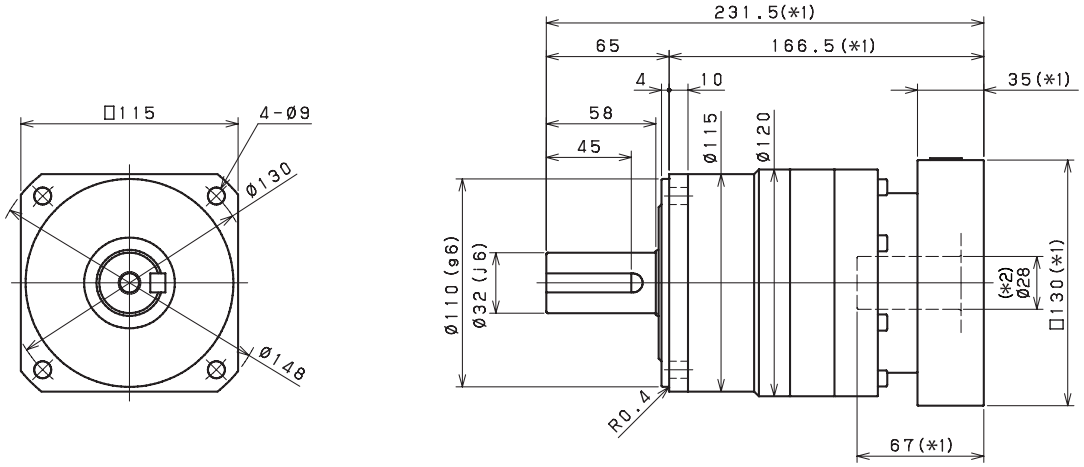

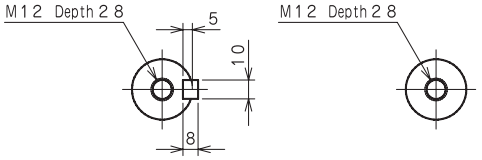

Keyed shaft　　Smooth shaft

*1) Length will vary depending on motor

*2) Bushing will be inserted to adapt to motor shaft

*3) 38mm input bore is available for this frame size. Use our online configurator to make your selection or contact us for assistance

VRB 140 1-Stage Specifications

Frame Size	**140**									
Ratio	Unit	Note	3	4	5	6	7	8	9	10
Nominal Output Torque	[Nm]	*1	248	280	380	380	380	380	380	380
Maximum Acceleration Torque	[Nm]	*2	560	840	840	840	840	840	610	610
Maximum Torque	[Nm]	*3	630	1000	1000	950	950	950	730	730
Emergency Stop Torque	[Nm]	*4	1000	1250	1250	1250	1250	1250	1000	1000
Nominal Input Speed	[rpm]	*5	2100	2100	2100	2100	2600	2600	2600	2600
Maximum Input Speed	[rpm]	*6	5000	5000	5000	5000	5000	5000	5000	5000
No Load Running Torque	[Nm]	*7	1.63							
Maximum Radial Load	[N]	*8	9100							
Maximum Axial Load	[N]	*9	8200							
Moment of Inertia (≤ Ø 14)	[kgcm2]	--	--	--	--	--	--	--	--	--
Moment of Inertia (≤ Ø 19)	[kgcm2]	--	--	--	--	--	--	--	--	--
Moment of Inertia (≤ Ø 28)	[kgcm2]	--	12	7.3	5.3	4.3	3.9	3.5	3.3	3.2
Moment of Inertia (≤ Ø 38)	[kgcm2]	--	18	14	12	11	10	9.9	9.7	9.6
Moment of Inertia (≤ Ø 48)	[kgcm2]	--	35	29	27	26	25	25	25	25
Efficiency	[%]	*10	95							
Torsional Rigidity	[Nm/arc-min]	*11	60							
Maximum Torsional Backlash	[arc-min]	--	≤ 3							
Noise Level	dB [A]	*12	≤ 67							
Protection Class	--	*13	IP54 (IP65)							
Ambient Temperature	[°C]	--	0-40							
Permitted Housing Temperature	[°C]	--	90							
Weight	[kg]	*14	16							

VRB 140 2-Stage Specifications

Frame Size	**140**									
Ratio	Unit	Note	15	16	20	25	28	30	35	40
Nominal Output Torque	[Nm]	*1	360	380	410	590	590	440	590	500
Maximum Acceleration Torque	[Nm]	*2	560	840	840	840	840	560	840	840
Maximum Torque	[Nm]	*3	560	840	840	840	840	560	840	840
Emergency Stop Torque	[Nm]	*4	1000	1250	1250	1250	1250	1000	1250	1250
Nominal Input Speed	[rpm]	*5	2900	2900	2900	2900	2900	2900	2900	2900
Maximum Input Speed	[rpm]	*6	6000	6000	6000	6000	6000	6000	6000	6000
No Load Running Torque	[Nm]	*7	0.56							
Maximum Radial Load	[N]	*8	9100							
Maximum Axial Load	[N]	*9	8200							
Moment of Inertia (≤ Ø 14)	[kgcm2]	--	--	--	--	--	--	--	--	--
Moment of Inertia (≤ Ø 19)	[kgcm2]	--	2.6	3.5	2.4	2.4	3.3	1.1	2.3	1.1
Moment of Inertia (≤ Ø 28)	[kgcm2]	--	4.4	5.3	4.2	4.1	5.1	2.9	4.1	2.8
Moment of Inertia (≤ Ø 38)	[kgcm2]	--	11	12	10	10	11	9.2	10	9.1
Moment of Inertia (≤ Ø 48)	[kgcm2]	--	26	27	25	25	26	24	25	24
Efficiency	[%]	*10	90							
Torsional Rigidity	[Nm/arc-min]	*11	60							
Maximum Torsional Backlash	[arc-min]	--	≤ 3							
Noise Level	dB [A]	*12	≤ 67							
Protection Class	--	*13	IP54 (IP65)							
Ambient Temperature	[°C]	--	0-40							
Permitted Housing Temperature	[°C]	--	90							
Weight	[kg]	*14	17							

VRB 140 2-Stage Specifications

Frame Size	**140**								
Ratio	Unit	Note	45	50	60	70	80	90	100
Nominal Output Torque	[Nm]	*1	440	590	590	590	590	440	440
Maximum Acceleration Torque	[Nm]	*2	610	840	840	840	840	610	610
Maximum Torque	[Nm]	*3	610	840	840	840	840	610	610
Emergency Stop Torque	[Nm]	*4	1000	1250	1250	1250	1250	1000	1000
Nominal Input Speed	[rpm]	*5	2900	3200	3200	3900	3900	3900	3900
Maximum Input Speed	[rpm]	*6	6000	6000	6000	6000	6000	6000	6000
No Load Running Torque	[Nm]	*7	0.56						
Maximum Radial Load	[N]	*8	9100						
Maximum Axial Load	[N]	*9	8200						
Moment of Inertia (≤ Ø 14)	[kgcm2]	--	--	0.65	0.64	0.64	0.63	0.63	0.63
Moment of Inertia (≤ Ø 19)	[kgcm2]	--	2.3	1.1	1.1	1.1	1.1	1.1	1.1
Moment of Inertia (≤ Ø 28)	[kgcm2]	--	4.0	2.8	2.8	2.8	2.8	2.8	2.8
Moment of Inertia (≤ Ø 38)	[kgcm2]	--	10	9.1	9.1	9.1	9.1	9.1	9.1
Moment of Inertia (≤ Ø 48)	[kgcm2]	--	25	24	24	24	24	24	24
Efficiency	[%]	*10	90						
Torsional Rigidity	[Nm/arc-min]	*11	60						
Maximum Torsional Backlash	[arc-min]	--	≤ 3						
Noise Level	dB [A]	*12	≤ 67						
Protection Class	--	*13	IP54 (IP65)						
Ambient Temperature	[°C]	--	0-40						
Permitted Housing Temperature	[°C]	--	90						
Weight	[kg]	*14	17						

*1) At nominal input speed, service life is 20,000 hours

*2) The maximum torque when starting or stopping operation. Apply Cycle Factor $\mathbf{f_0}$, found on page 468, for higher duty cycle applications

*3) Permitted 10,000 times during service life. Based on 10% of maximum radial load and smooth output shaft

*4) The maximum torque allowed under a stress situation. Permitted 1,000 times during service life

*5) The average input speed at nominal input torque. Maintain housing temperature below permitted value

*6) The maximum intermittent input speed

*7) Torque at no load applied to the input shaft at nominal input speed

*8) The maximum radial load that the gearbox can accept

*9) The maximum axial load that the gearbox can accept

*10) The efficiency at the nominal output torque rating

*11) This does not include lost motion

*12) Contact Nidec Drive Technology for the testing conditions and environment

*13) IP65 (wash-down) is available as an option. Contact Nidec Drive Technology for more details

*14) Weight may vary slightly between models

VRB 140 1-Stage Dimensions

Input bore size ≦φ28 mm

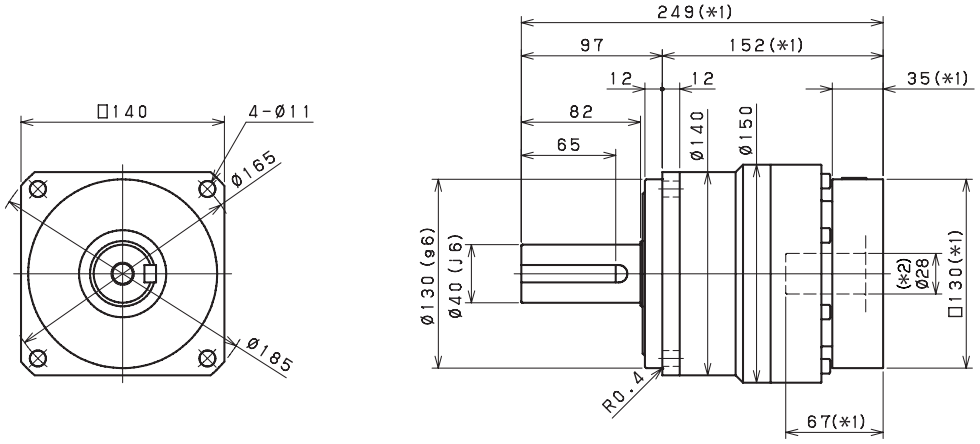

Input bore size ≦φ38 mm

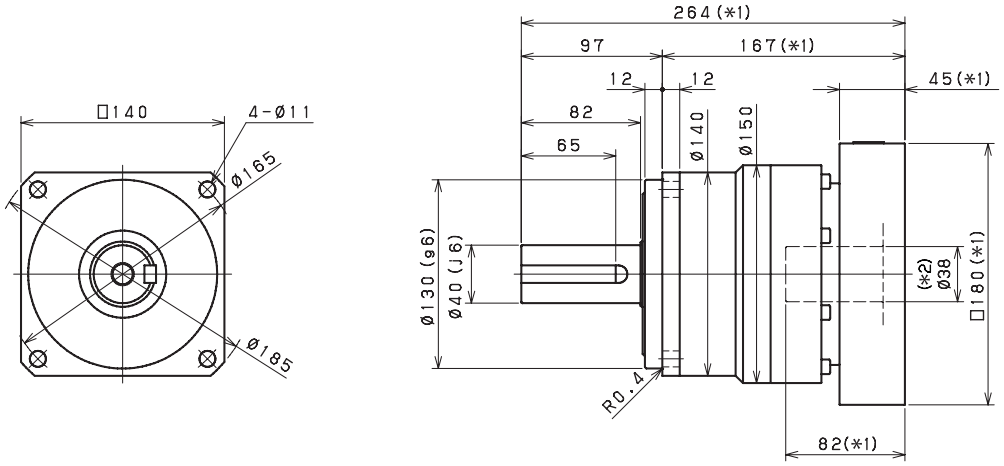

Input bore size ≦φ48 mm

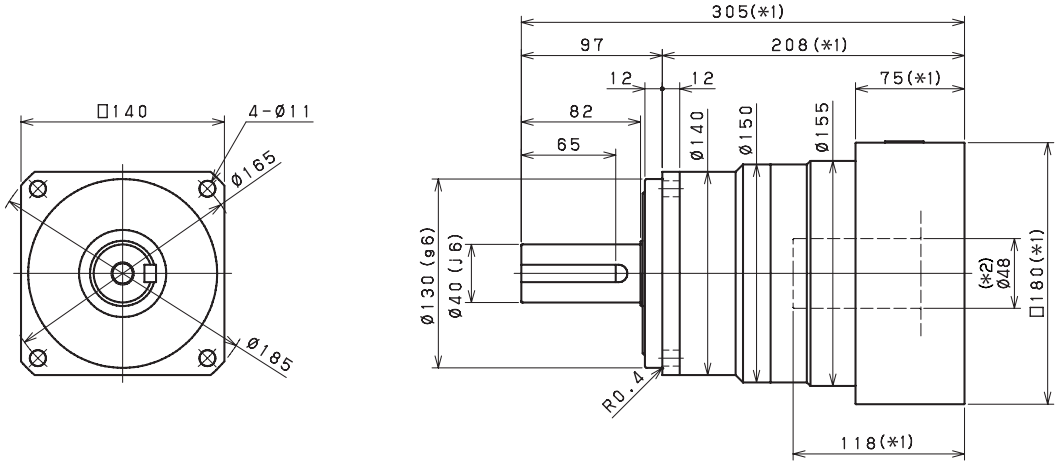

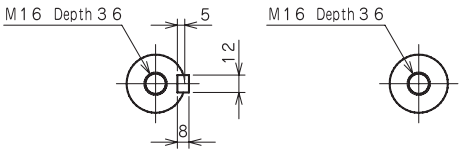

Keyed shaft　　Smooth shaft

*1) Length will vary depending on motor

*2) Bushing will be inserted to adapt to motor shaft

VRB 140 2-Stage Dimensions

Input bore size ≦φ19 mm

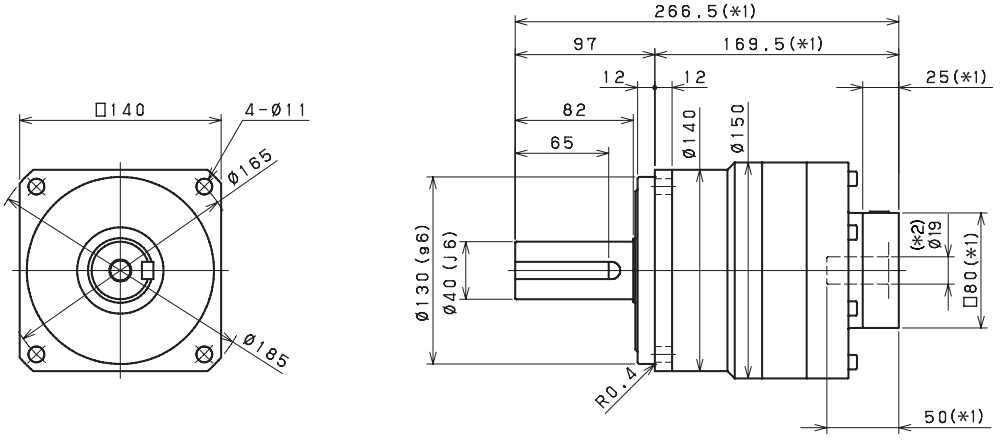

Input bore size ≦φ28 mm

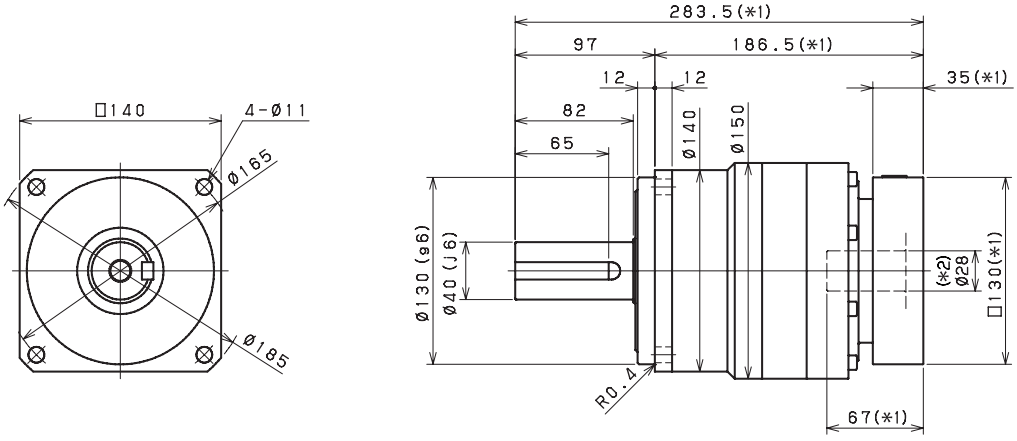

Input bore size ≦φ38 mm (*3)

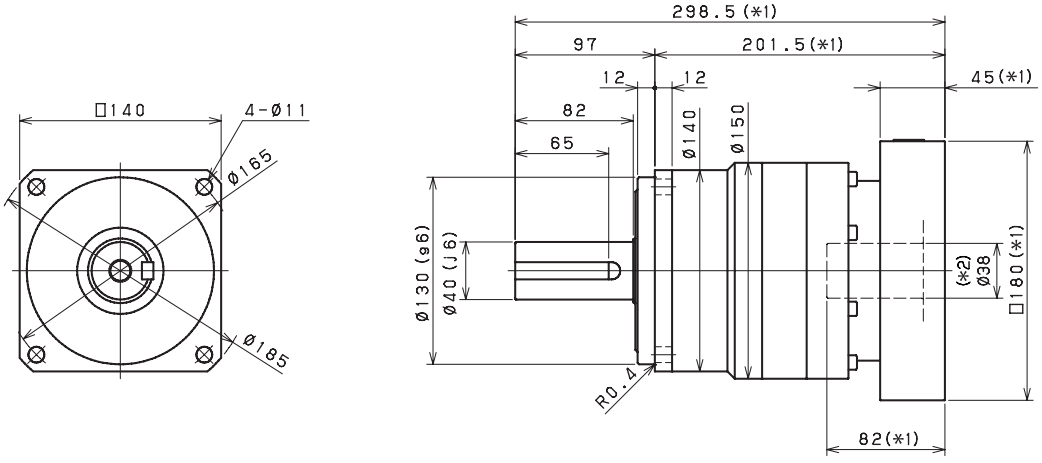

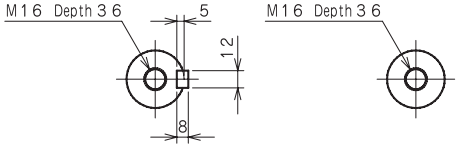

Keyed shaft　　Smooth shaft

*1) Length will vary depending on motor

*2) Bushing will be inserted to adapt to motor shaft

*3) 48mm input bore is available for this frame size. Use our online configurator to make your selection or contact us for assistance

VRB 180 1-Stage Specifications

Frame Size	**180**									
Ratio	Unit	Note	3	4	5	6	7	8	9	10
Nominal Output Torque	[Nm]	*1	570	850	910	910	910	910	910	910
Maximum Acceleration Torque	[Nm]	*2	1300	1850	1850	1850	1850	1850	1350	1350
Maximum Torque	[Nm]	*3	1450	2250	2250	2150	2150	2150	1750	1750
Emergency Stop Torque	[Nm]	*4	2200	2750	2750	2750	2750	2750	2200	2200
Nominal Input Speed	[rpm]	*5	1500	1500	1500	1500	2300	2300	2300	2300
Maximum Input Speed	[rpm]	*6	4500	4500	4500	4500	4500	4500	4500	4500
No Load Running Torque	[Nm]	*7	2.68							
Maximum Radial Load	[N]	*8	15000							
Maximum Axial Load	[N]	*9	14000							
Moment of Inertia (≤ Ø 19)	[kgcm2]	--	--	--	--	--	--	--	--	--
Moment of Inertia (≤ Ø 28)	[kgcm2]	--	--	--	--	--	--	--	--	--
Moment of Inertia (≤ Ø 38)	[kgcm2]	--	43	26	19	15	14	13	12	12
Moment of Inertia (≤ Ø 48)	[kgcm2]	--	57	41	34	31	29	28	27	27
Moment of Inertia (≤ Ø 65)	[kgcm2]	--	110	85	78	75	73	72	71	71
Efficiency	[%]	*10	95							
Torsional Rigidity	[Nm/arc-min]	*11	175							
Maximum Torsional Backlash	[arc-min]	--	≤ 3							
Noise Level	dB [A]	*12	≤ 67							
Protection Class	--	*13	IP54 (IP65)							
Ambient Temperature	[°C]	--	0-40							
Permitted Housing Temperature	[°C]	--	90							
Weight	[kg]	*14	36							

VRB 180 2-Stage Specifications

Frame Size	**180**									
Ratio	Unit	Note	15	16	20	25	28	30	35	40
Nominal Output Torque	[Nm]	*1	660	850	910	1100	1300	930	1300	1200
Maximum Acceleration Torque	[Nm]	*2	1300	1850	1850	1850	1850	1300	1850	1850
Maximum Torque	[Nm]	*3	1300	1850	1850	1850	1850	1300	1850	1850
Emergency Stop Torque	[Nm]	*4	2200	2750	2750	2750	2750	2200	2750	2750
Nominal Input Speed	[rpm]	*5	2700	2700	2700	2700	2700	2700	2700	2700
Maximum Input Speed	[rpm]	*6	5000	5000	5000	5000	5000	5000	5000	5000
No Load Running Torque	[Nm]	*7	1.39							
Maximum Radial Load	[N]	*8	15000							
Maximum Axial Load	[N]	*9	14000							
Moment of Inertia (≤ Ø 19)	[kgcm2]	--	--	--	--	--	--	--	--	--
Moment of Inertia (≤ Ø 28)	[kgcm2]	--	8.8	11	8.1	7.9	11	4.0	7.6	3.9
Moment of Inertia (≤ Ø 38)	[kgcm2]	--	15	18	14	14	17	10	14	10
Moment of Inertia (≤ Ø 48)	[kgcm2]	--	30	33	29	29	32	25	29	25
Moment of Inertia (≤ Ø 65)	[kgcm2]	--	--	--	--	--	--	--	--	--
Efficiency	[%]	*10	90							
Torsional Rigidity	[Nm/arc-min]	*11	175							
Maximum Torsional Backlash	[arc-min]	--	≤ 3							
Noise Level	dB [A]	*12	≤ 67							
Protection Class	--	*13	IP54 (IP65)							
Ambient Temperature	[°C]	--	0-40							
Permitted Housing Temperature	[°C]	--	90							
Weight	[kg]	*14	37							

VRB 180 2-Stage Specifications

Frame Size			**180**						
Ratio	Unit	Note	45	50	60	70	80	90	100
Nominal Output Torque	[Nm]	*1	930	1300	1300	1300	1300	930	930
Maximum Acceleration Torque	[Nm]	*2	1350	1850	1850	1850	1850	1350	1350
Maximum Torque	[Nm]	*3	1350	1850	1850	1850	1850	1350	1350
Emergency Stop Torque	[Nm]	*4	2200	2750	2750	2750	2750	2200	2200
Nominal Input Speed	[rpm]	*5	2700	2900	2900	3400	3400	3400	3400
Maximum Input Speed	[rpm]	*6	5000	5000	5000	5000	5000	5000	5000
No Load Running Torque	[Nm]	*7	1.39						
Maximum Radial Load	[N]	*8	15000						
Maximum Axial Load	[N]	*9	14000						
Moment of Inertia (≤ Ø 19)	[kgcm2]	--	--	1.9	1.9	1.8	1.8	1.8	1.8
Moment of Inertia (≤ Ø 28)	[kgcm2]	--	7.6	3.8	3.8	3.8	3.7	3.7	3.7
Moment of Inertia (≤ Ø 38)	[kgcm2]	--	14	10	10	10	10	10	10
Moment of Inertia (≤ Ø 48)	[kgcm2]	--	29	25	25	25	25	25	25
Moment of Inertia (≤ Ø 65)	[kgcm2]	--	--	--	--	--	--	--	--
Efficiency	[%]	*10	90						
Torsional Rigidity	[Nm/arc-min]	*11	175						
Maximum Torsional Backlash	[arc-min]	--	≤ 3						
Noise Level	dB [A]	*12	≤ 67						
Protection Class	--	*13	IP54 (IP65)						
Ambient Temperature	[°C]	--	0-40						
Permitted Housing Temperature	[°C]	--	90						
Weight	[kg]	*14	37						

*1) At nominal input speed, service life is 20,000 hours

*2) The maximum torque when starting or stopping operation. Apply Cycle Factor $\mathbf{f_0}$, found on page 468, for higher duty cycle applications

*3) Permitted 10,000 times during service life. Based on 10% of maximum radial load and smooth output shaft

*4) The maximum torque allowed under a stress situation. Permitted 1,000 times during service life

*5) The average input speed at nominal input torque. Maintain housing temperature below permitted value

*6) The maximum intermittent input speed

*7) Torque at no load applied to the input shaft at nominal input speed

*8) The maximum radial load that the gearbox can accept

*9) The maximum axial load that the gearbox can accept

*10) The efficiency at the nominal output torque rating

*11) This does not include lost motion

*12) Contact Nidec Drive Technology for the testing conditions and environment

*13) IP65 (wash-down) is available as an option. Contact Nidec Drive Technology for more details

*14) Weight may vary slightly between models

VRB 180 1-Stage Dimensions

Input bore size ≦φ38 mm

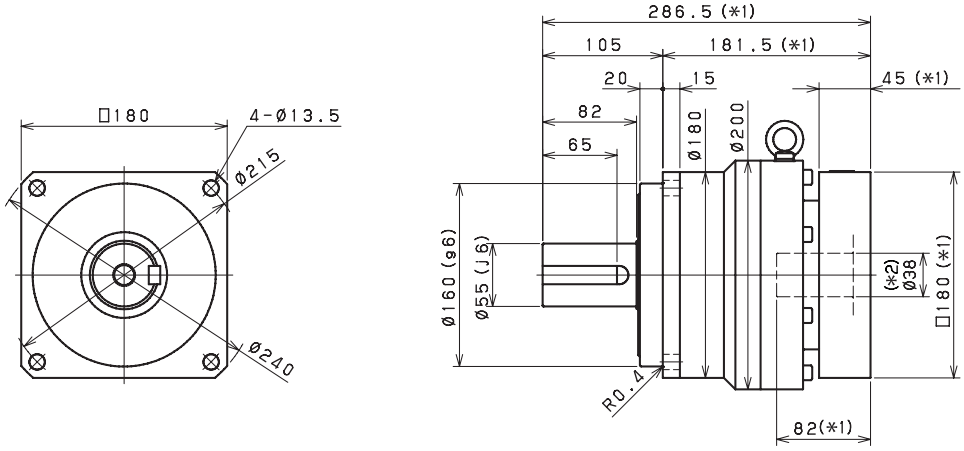

Input bore size ≦φ48 mm

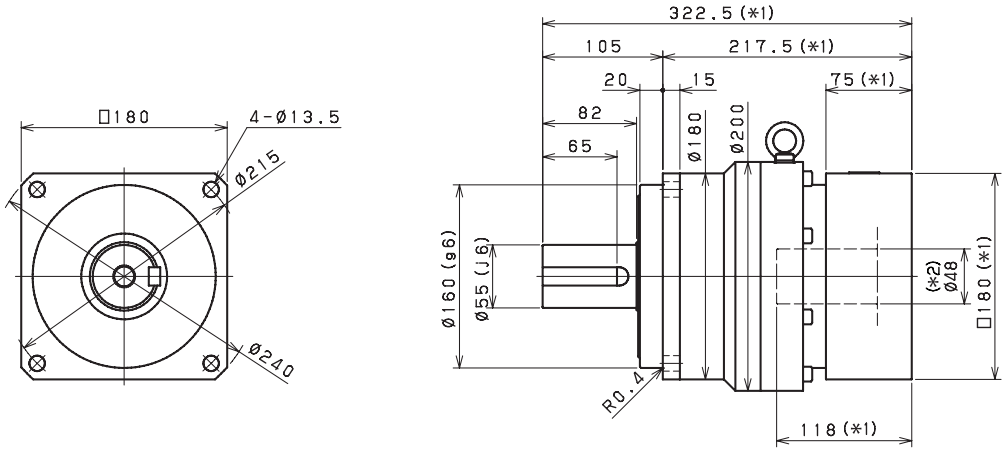

Input bore size ≦φ65 mm

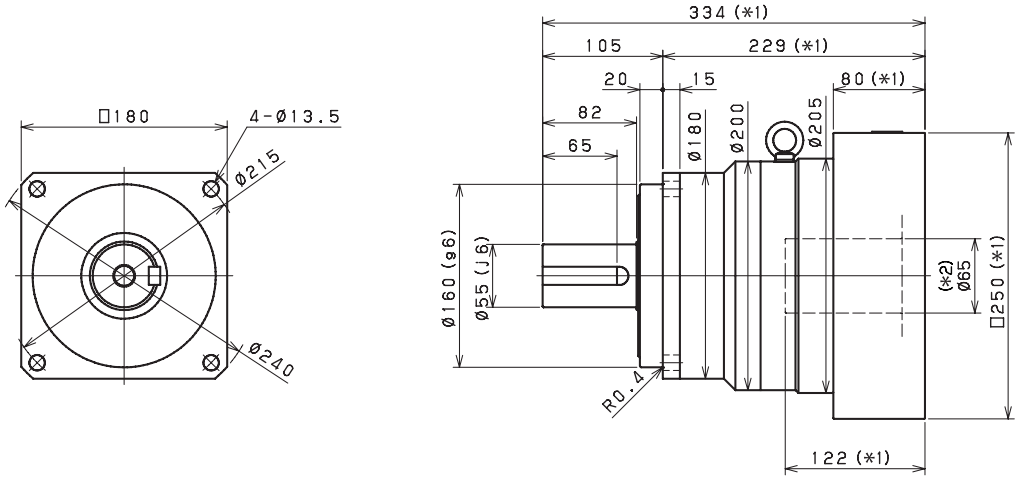

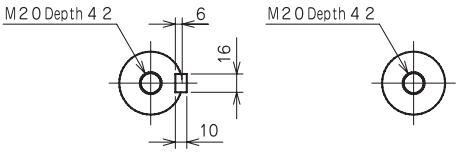

Keyed shaft　　Smooth shaft

*1) Length will vary depending on motor

*2) Bushing will be inserted to adapt to motor shaft

VRB 180 2-Stage Dimensions

Input bore size ≦φ28 mm

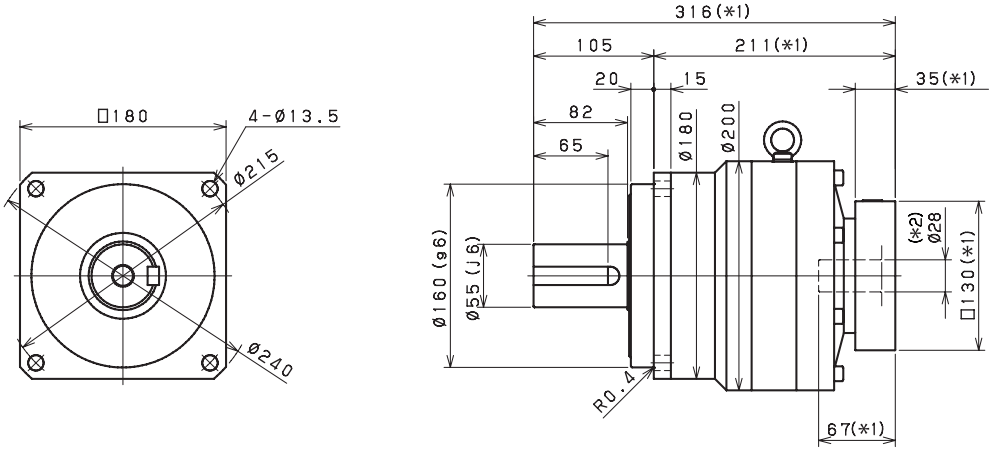

Input bore size ≦φ38 mm

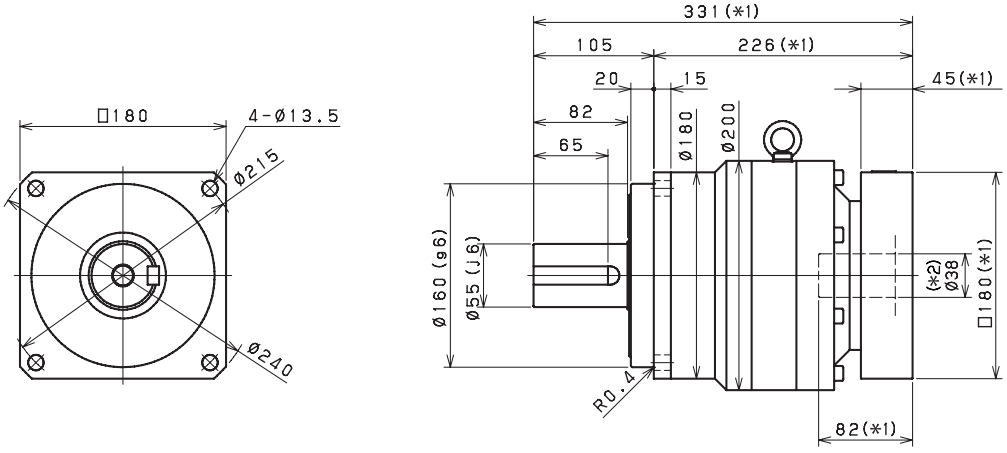

Input bore size ≦φ48 mm

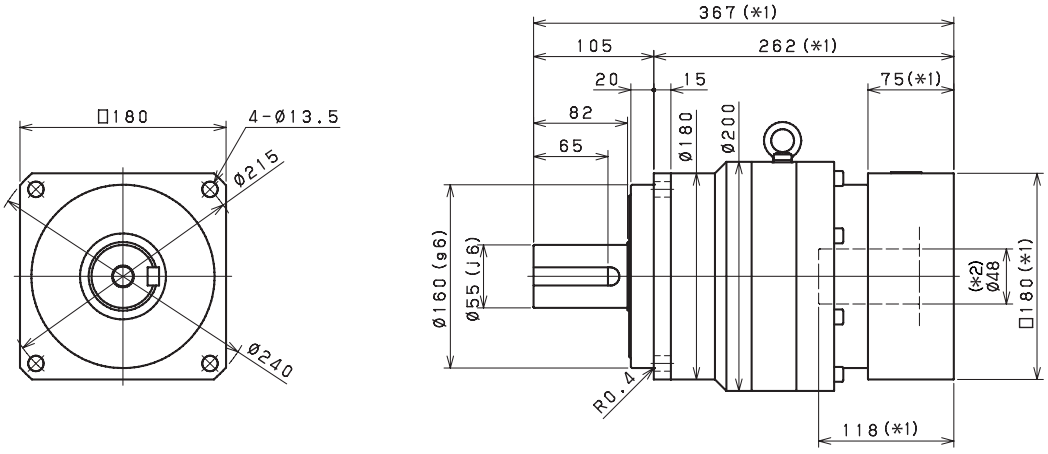

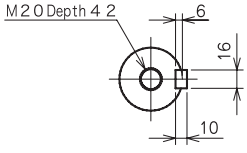

Keyed shaft

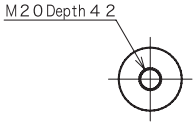

Smooth shaft

*1) Length will vary depending on motor

*2) Bushing will be inserted to adapt to motor shaft

VRB 220 1-Stage Specifications

Frame Size	**220**									
Ratio	Unit	Note	3	4	5	6	7	8	9	10
Nominal Output Torque	[Nm]	*1	980	1400	1400	1600	1700	1700	1700	1700
Maximum Acceleration Torque	[Nm]	*2	2000	2900	2900	2900	2900	2900	2600	2200
Maximum Torque	[Nm]	*3	2400	3700	3700	3500	3500	3400	3000	2700
Emergency Stop Torque	[Nm]	*4	4000	5000	5000	5000	5000	5000	4000	4000
Nominal Input Speed	[rpm]	*5	1200	1200	1500	1500	1700	1700	2000	2000
Maximum Input Speed	[rpm]	*6	3000	3000	3000	3000	3000	3000	3000	3000
No Load Running Torque	[Nm]	*7	2.92							
Maximum Radial Load	[N]	*8	15000							
Maximum Axial Load	[N]	*9	14000							
Moment of Inertia (≤ Ø 28)	[kgcm2]	--	--	--	--	--	--	--	--	--
Moment of Inertia (≤ Ø 38)	[kgcm2]	--	--	--	--	--	--	--	--	--
Moment of Inertia (≤ Ø 48)	[kgcm2]	--	110	54	42	35	33	30	29	28
Moment of Inertia (≤ Ø 65)	[kgcm2]	--	160	98	85	79	76	74	73	72
Efficiency	[%]	*10	95							
Torsional Rigidity	[Nm/arc-min]	*11	400							
Maximum Torsional Backlash	[arc-min]	--	≤ 3							
Noise Level	dB [A]	*12	≤ 61							
Protection Class	--	*13	IP54 (IP65)							
Ambient Temperature	[°C]	--	0-40							
Permitted Housing Temperature	[°C]	--	90							
Weight	[kg]	*14	53							

VRB 220 2-Stage Specifications

Frame Size	**220**									
Ratio	Unit	Note	15	16	20	25	28	30	35	40
Nominal Output Torque	[Nm]	*1	1100	1400	1500	1800	2000	1300	2000	2000
Maximum Acceleration Torque	[Nm]	*2	2000	2900	2900	2900	2900	2000	2900	2900
Maximum Torque	[Nm]	*3	2000	2900	2900	2900	2900	2000	2900	2900
Emergency Stop Torque	[Nm]	*4	4000	5000	5000	5000	5000	4000	5000	5000
Nominal Input Speed	[rpm]	*5	2200	2200	2200	2200	2200	2200	2200	2200
Maximum Input Speed	[rpm]	*6	4500	4500	4500	4500	4500	4500	4500	4500
No Load Running Torque	[Nm]	*7	1.14							
Maximum Radial Load	[N]	*8	15000							
Maximum Axial Load	[N]	*9	14000							
Moment of Inertia (≤ Ø 28)	[kgcm2]	--	--	--	--	--	--	--	--	--
Moment of Inertia (≤ Ø 38)	[kgcm2]	--	20	24	19	18	23	12	18	12
Moment of Inertia (≤ Ø 48)	[kgcm2]	--	34	39	33	33	37	26	32	26
Moment of Inertia (≤ Ø 65)	[kgcm2]	--	--	--	--	--	--	--	--	--
Efficiency	[%]	*10	90							
Torsional Rigidity	[Nm/arc-min]	*11	400							
Maximum Torsional Backlash	[arc-min]	--	≤ 3							
Noise Level	dB [A]	*12	≤ 61							
Protection Class	--	*13	IP54 (IP65)							
Ambient Temperature	[°C]	--	0-40							
Permitted Housing Temperature	[°C]	--	90							
Weight	[kg]	*14	54							

VRB 220 2-Stage Specifications

Frame Size	**220**								
Ratio	Unit	Note	45	50	60	70	80	90	100
Nominal Output Torque	[Nm]	*1	1300	2000	2000	2000	2000	1300	1300
Maximum Acceleration Torque	[Nm]	*2	1800	2900	2900	2900	2500	1800	1600
Maximum Torque	[Nm]	*3	1800	2900	2900	2900	2500	1800	1600
Emergency Stop Torque	[Nm]	*4	4000	5000	5000	5000	5000	4000	4000
Nominal Input Speed	[rpm]	*5	2200	2500	2500	3000	3000	3000	3000
Maximum Input Speed	[rpm]	*6	4500	4500	4500	4500	4500	4500	4500
No Load Running Torque	[Nm]	*7	1.14						
Maximum Radial Load	[N]	*8	15000						
Maximum Axial Load	[N]	*9	14000						
Moment of Inertia (≤ Ø 28)	[kgcm2]	--	--	4.7	4.7	4.6	4.6	4.6	4.6
Moment of Inertia (≤ Ø 38)	[kgcm2]	--	18	12	11	11	11	11	11
Moment of Inertia (≤ Ø 48)	[kgcm2]	--	32	26	26	26	26	26	26
Moment of Inertia (≤ Ø 65)	[kgcm2]	--	--	--	--	--	--	--	--
Efficiency	[%]	*10	90						
Torsional Rigidity	[Nm/arc-min]	*11	400						
Maximum Torsional Backlash	[arc-min]	--	≤ 3						
Noise Level	dB [A]	*12	≤ 61						
Protection Class	--	*13	IP54 (IP65)						
Ambient Temperature	[°C]	--	0-40						
Permitted Housing Temperature	[°C]	--	90						
Weight	[kg]	*14	54						

*1) At nominal input speed, service life is 20,000 hours

*2) The maximum torque when starting or stopping operation. Apply Cycle Factor $\mathbf{f_0}$, found on page 468, for higher duty cycle applications

*3) Permitted 10,000 times during service life. Based on 10% of maximum radial load and smooth output shaft

*4) The maximum torque allowed under a stress situation. Permitted 1,000 times during service life

*5) The average input speed at nominal input torque. Maintain housing temperature below permitted value

*6) The maximum intermittent input speed

*7) Torque at no load applied to the input shaft at nominal input speed

*8) The maximum radial load that the gearbox can accept

*9) The maximum axial load that the gearbox can accept

*10) The efficiency at the nominal output torque rating

*11) This does not include lost motion

*12) Contact Nidec Drive Technology for the testing conditions and environment

*13) IP65 (wash-down) is available as an option. Contact Nidec Drive Technology for more details

*14) Weight may vary slightly between models

VRB 220 1-Stage Dimensions

Input bore size ≦φ48 mm

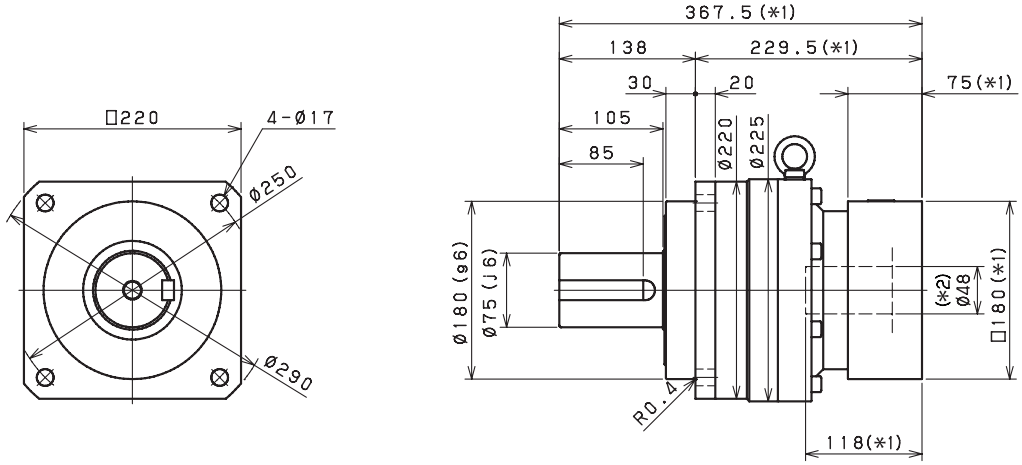

Input bore size ≦φ65 mm

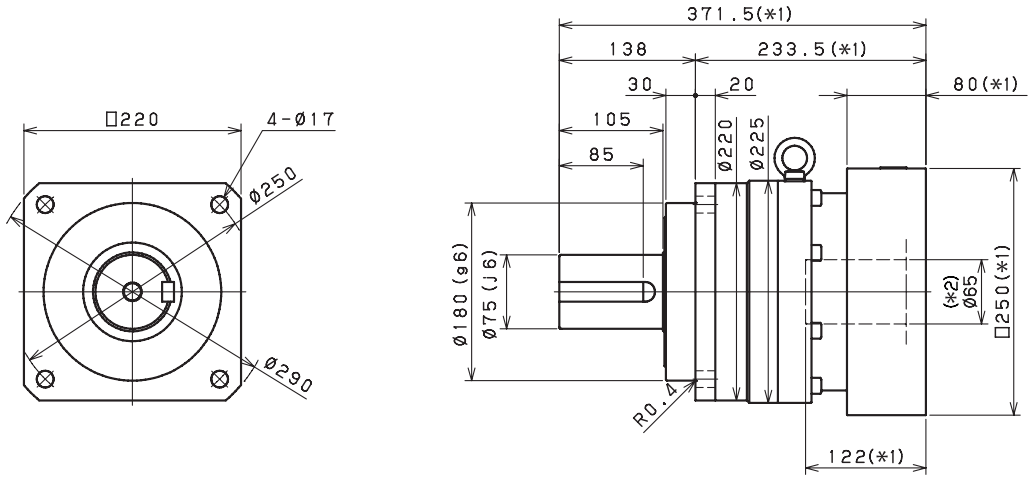

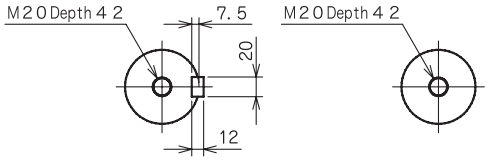

Keyed shaft　　Smooth shaft

*1) Length will vary depending on motor

*2) Bushing will be inserted to adapt to motor shaft

VRB 220 2-Stage Dimensions

Input bore size ≦φ38 mm

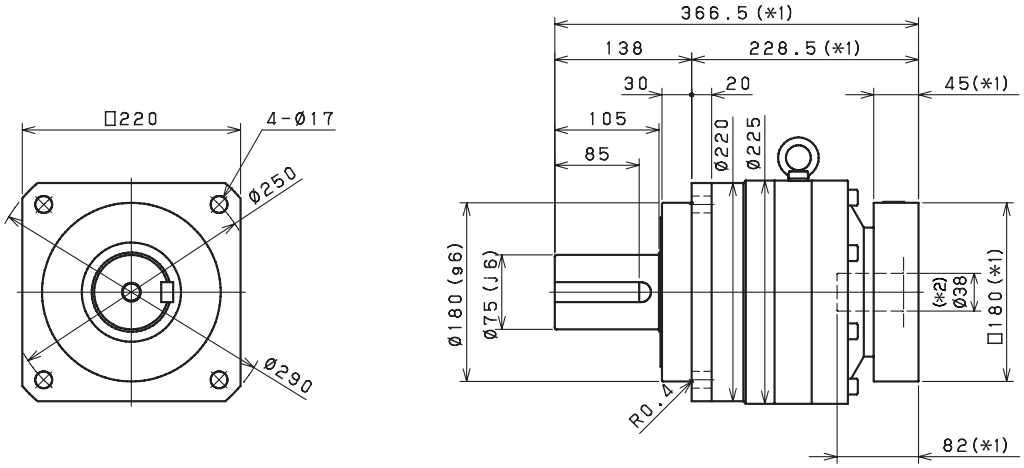

Input bore size ≦φ48 mm

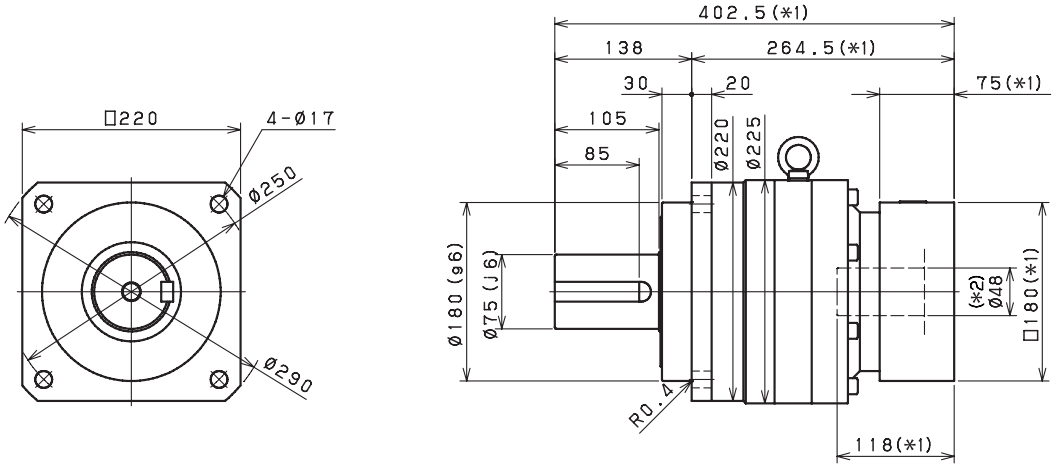

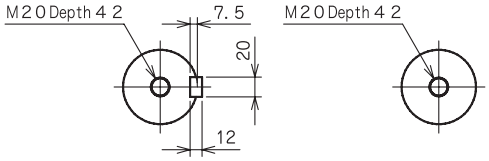

Keyed shaft　　Smooth shaft

*1) Length will vary depending on motor

*2) Bushing will be inserted to adapt to motor shaft

VRS SERIES

Compact and precise, the VRS is the ideal solution for demanding positioning accuracy and speed requirements. This product is a proven performer in higher speed, continuous duty applications where heat reduction is critical. Equipped with two rows of robust tapered roller bearings, the VRS runs smoothly and quietly even with the most challenging dynamic and static forces.

The VRS is available with reduced backlash, less than 2 arc-min, to handle dynamic machine tool and robotic applications with ease. With maximum acceleration torques up to 3700Nm, this product is an excellent partner to higher capacity servomotor models. Our customers specify this product when the industry standard is simply not good enough.

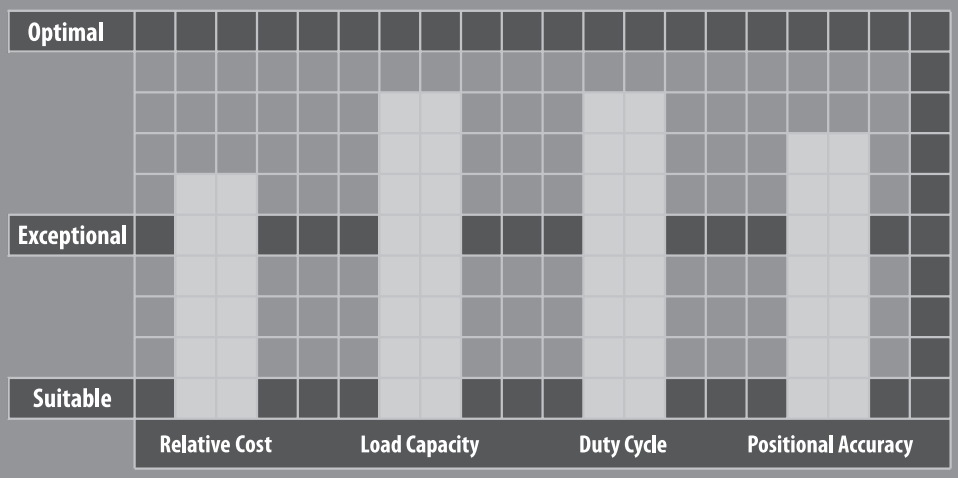

VRS SERIES

- Proven performer in high end motion control applications with demanding accuracy requirements
- Excellent fit for difficult overhung load situations or continuous duty cycles
- The widest range of frame sizes and ratios available in the market
- Best-In-class standard backlash (≤3 arc-min) with reduced backlash options available
- Broad range of mounting adapters offer a simple, precise attachment to any motor
- Maintenance-free solution that is lubricated for life. High performance grease allows flexible mounting in any orientation
- Industry standard through-bolt mounting style
- Assembled in the USA

VRS Series Features

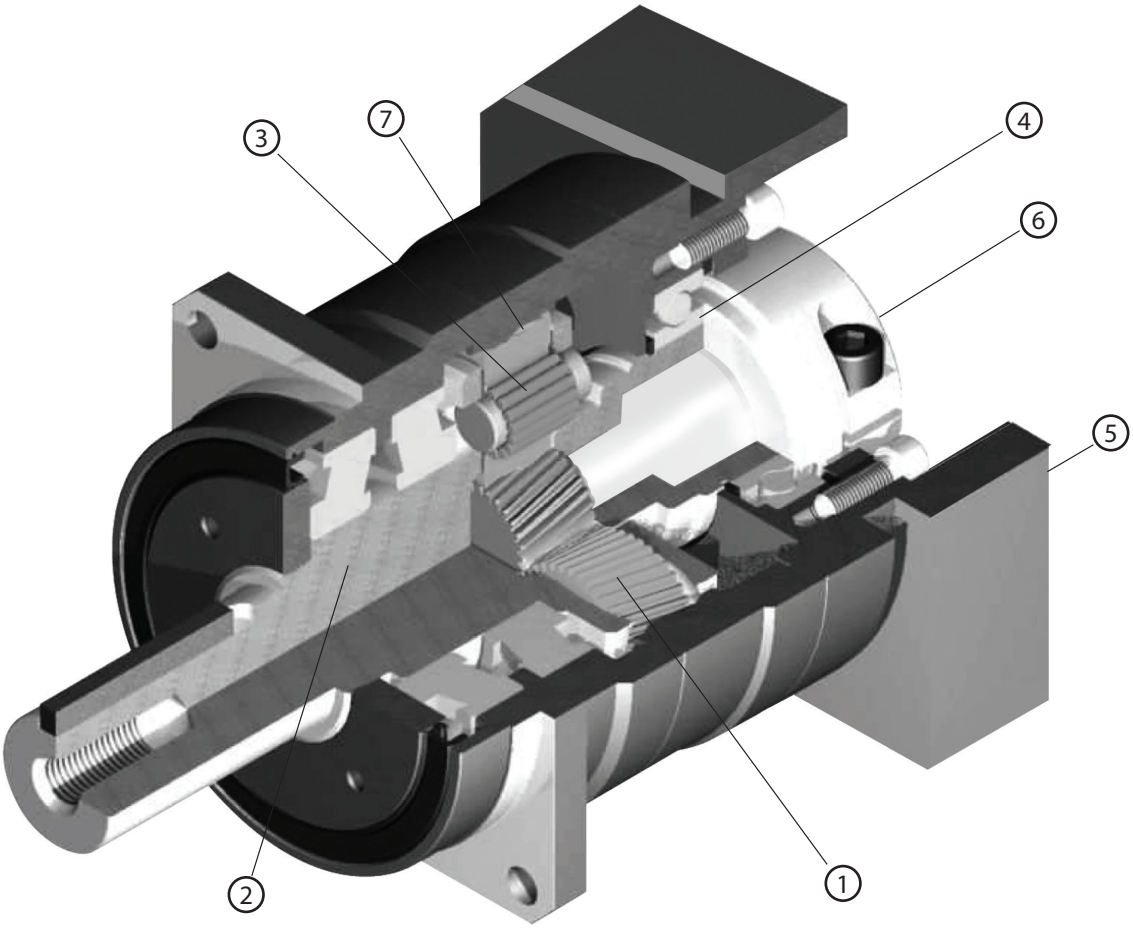

1. Carburized helical gears with proprietary secondary finishing process for higher accuracy and smooth, quiet operation
2. One piece output shaft and planet carrier with two robust tapered bearings. Higher radial/axial load capacity, stiffness, torque density and safety factor, with guaranteed alignment of gearing
3. Uncaged needle roller bearings provide excellent torque density and torsional rigidity
4. Unique labyrinth input seal design greatly reduces heat and increases system efficiency. IP65 protection is available for wash down applications
5. Optimized mounting system with active centering on motor pilot diameter guarantees alignment of motor. Motor can be installed in any orientation
6. True concentric motor shaft clamping connection, optimized for your specific motor. Reduced inertia for dynamic performance and balanced for high speed operation
7. Ring gear machined directly into the housing, not welded or pressed in. Provides greater concentricity and elimination of speed fluctuation

VRS Series Model Code

VRS – 100 C – 7 – K 3 – 19HB16

- **19HB16** — Motor mounting code (*1)
- **3** — Standard Backlash: ≤3 arc-min
  Reduced Backlash: ≤2 arc-min (*2)
  Reduced Backlash: ≤1 arc-min (*3)
- **K** — Output mounting style: K: Keyed shaft / S: Smooth shaft
- **7** — Ratio: 1-Stage: 3, 4, 5, 6, 7, 8, 9, 10
  2-Stage: 15, 16, 20, 25, 28, 30, 35, 40, 45, 50, 60, 70, 80, 90, 100
- **C** — Design version
- **100** — Frame size: 060, 075, 100, 140, 180, 210, 240
- **VRS** — Series

*1) Motor mounting code varies depending on the motor. Use the selection tool link below to configure the code.
*2) Sizes 060/075, Single Stage Only
*3) Sizes 100/140/180, Single Stage Only

Contact us for additional information or refer to our online gearhead selection tool.

Selection tool https://www.nidec-drivetechnology.co.jp/selection/all/

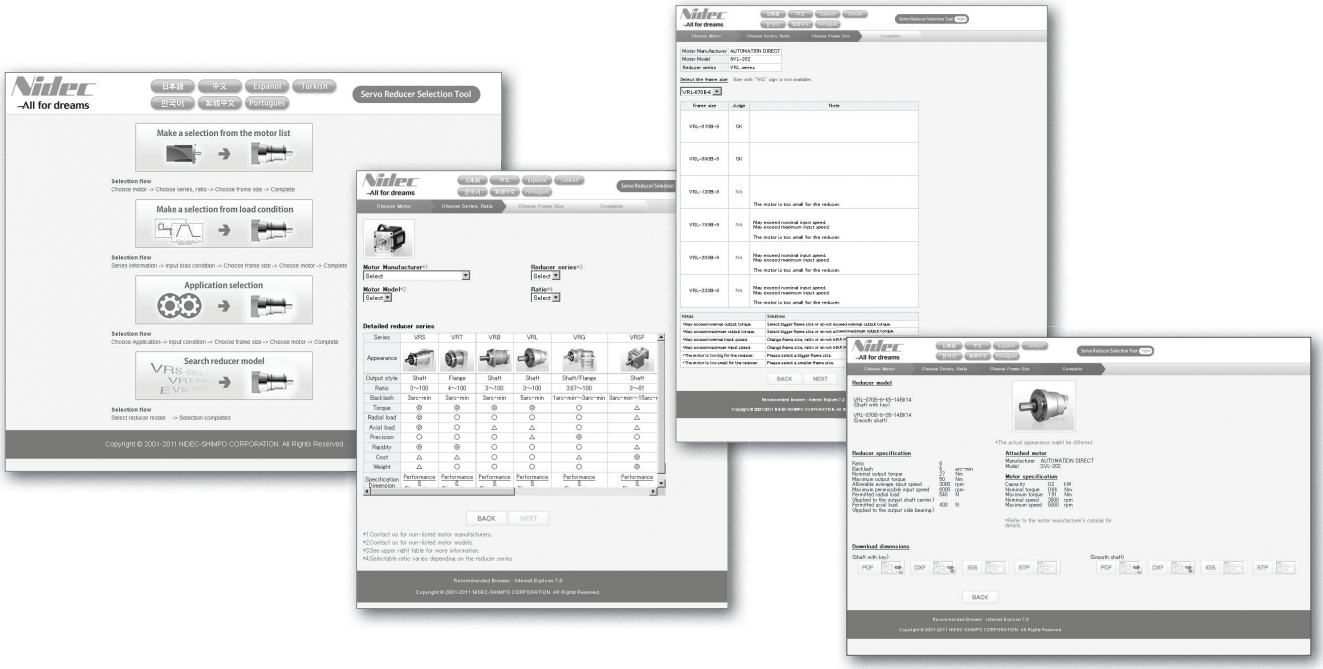

VRS 060 1-Stage Specifications

Frame Size	**060**									
Ratio	Unit	Note	3	4	5	6	7	8	9	10
Nominal Output Torque	[Nm]	*1	19	27	28	28	28	28	28	28
Maximum Acceleration Torque	[Nm]	*2	46	66	66	66	66	66	46	46
Maximum Torque	[Nm]	*3	55	79	79	79	79	76	55	55
Emergency Stop Torque	[Nm]	*4	80	100	100	100	100	100	80	80
Nominal Input Speed	[rpm]	*5	3300	3300	4000	4000	4000	4000	4000	4000
Maximum Input Speed	[rpm]	*6	7500	7500	7500	7500	7500	7500	7500	7500
No Load Running Torque	[Nm]	*7	0.15							
Maximum Radial Load	[N]	*8	3000							
Maximum Axial Load	[N]	*9	2700							
Moment of Inertia (≤Ø 8)	[kgcm2]	--	0.15	0.10	0.080	0.070	0.064	0.060	0.058	0.056
Moment of Inertia (≤ Ø 14)	[kgcm2]	--	0.26	0.21	0.19	0.18	0.18	0.17	0.17	0.17
Moment of Inertia (≤ Ø 19)	[kgcm2]	--	0.54	0.49	0.47	0.46	0.45	0.45	0.45	0.44
Efficiency	[%]	*10	95							
Torsional Rigidity	[Nm/arc-min]	*11	3.5							
Maximum Torsional Backlash	[arc-min]	--	Standard ≤ 3 / Reduced ≤ 2							
Noise Level	dB [A]	*12	≤ 66							
Protection Class	--	*13	IP54 (IP65)							
Ambient Temperature	[°C]	--	0-40							
Permitted Housing Temperature	[°C]	--	90							
Weight	[kg]	*14	1.6							

VRS 060 2-Stage Specifications

Frame Size	**060**									
Ratio	Unit	Note	15	16	20	25	28	30	35	40
Nominal Output Torque	[Nm]	*1	25	32	32	43	45	32	45	45
Maximum Acceleration Torque	[Nm]	*2	46	66	66	66	66	46	66	66
Maximum Torque	[Nm]	*3	46	66	66	66	66	46	66	66
Emergency Stop Torque	[Nm]	*4	80	100	100	100	100	80	100	100
Nominal Input Speed	[rpm]	*5	4000	4000	4000	4000	4000	4000	4000	4000
Maximum Input Speed	[rpm]	*6	8500	8500	8500	8500	8500	8500	8500	8500
No Load Running Torque	[Nm]	*7	0.04							
Maximum Radial Load	[N]	*8	3000							
Maximum Axial Load	[N]	*9	2700							
Moment of Inertia (≤Ø 8)	[kgcm2]	--	0.064	0.070	0.062	0.062	0.068	0.052	0.061	0.051
Moment of Inertia (≤ Ø 14)	[kgcm2]	--	0.18	0.18	0.17	0.17	0.18	0.16	0.17	0.16
Moment of Inertia (≤ Ø 19)	[kgcm2]	--	0.45	0.46	0.45	0.45	0.46	0.44	0.45	0.44
Efficiency	[%]	*10	90							
Torsional Rigidity	[Nm/arc-min]	*11	3.5							
Maximum Torsional Backlash	[arc-min]	--	≤ 3							
Noise Level	dB [A]	*12	≤ 66							
Protection Class	--	*13	IP54 (IP65)							
Ambient Temperature	[°C]	--	0-40							
Permitted Housing Temperature	[°C]	--	90							
Weight	[kg]	*14	1.8							

VRS 060 2-Stage Specifications

Frame Size	**060**								
Ratio	Unit	Note	45	50	60	70	80	90	100
Nominal Output Torque	[Nm]	*1	32	45	45	45	45	32	32
Maximum Acceleration Torque	[Nm]	*2	46	66	66	66	66	46	46
Maximum Torque	[Nm]	*3	46	66	66	66	66	46	46
Emergency Stop Torque	[Nm]	*4	80	100	100	100	100	80	80
Nominal Input Speed	[rpm]	*5	4000	4800	4800	5500	5500	5500	5500
Maximum Input Speed	[rpm]	*6	8500	8500	8500	8500	8500	8500	8500
No Load Running Torque	[Nm]	*7	0.04						
Maximum Radial Load	[N]	*8	3000						
Maximum Axial Load	[N]	*9	2700						
Moment of Inertia (≤Ø 8)	[kgcm2]	--	0.061	0.051	0.051	0.051	0.051	0.051	0.051
Moment of Inertia (≤ Ø 14)	[kgcm2]	--	0.17	0.16	0.16	0.16	0.16	0.16	0.16
Moment of Inertia (≤ Ø 19)	[kgcm2]	--	0.45	0.44	0.44	0.44	0.44	0.44	0.44
Efficiency	[%]	*10	90						
Torsional Rigidity	[Nm/arc-min]	*11	3.5						
Maximum Torsional Backlash	[arc-min]	--	≤ 3						
Noise Level	dB [A]	*12	≤ 66						
Protection Class	--	*13	IP54 (IP65)						
Ambient Temperature	[°C]	--	0-40						
Permitted Housing Temperature	[°C]	--	90						
Weight	[kg]	*14	1.8						

*1) At nominal input speed, service life is 20,000 hours

*2) The maximum torque when starting or stopping operation. Apply Cycle Factor f_0, found on page 468, for higher duty cycle applications

*3) Permitted 10,000 times during service life. Based on 10% of maximum radial load and smooth output shaft

*4) The maximum torque allowed under a stress situation. Permitted 1,000 times during service life

*5) The average input speed at nominal input torque. Maintain housing temperature below permitted value

*6) The maximum intermittent input speed

*7) Torque at no load applied to the input shaft at nominal input speed

*8) The maximum radial load that the gearbox can accept

*9) The maximum axial load that the gearbox can accept

*10) The efficiency at the nominal output torque rating

*11) This does not include lost motion

*12) Contact Nidec Drive Technology for the testing conditions and environment

*13) IP65 (wash-down) is available as an option. Contact Nidec Drive Technology for more details

*14) Weight may vary slightly between models

VRS 060 1-Stage Dimensions

Input bore size ≦φ8 mm

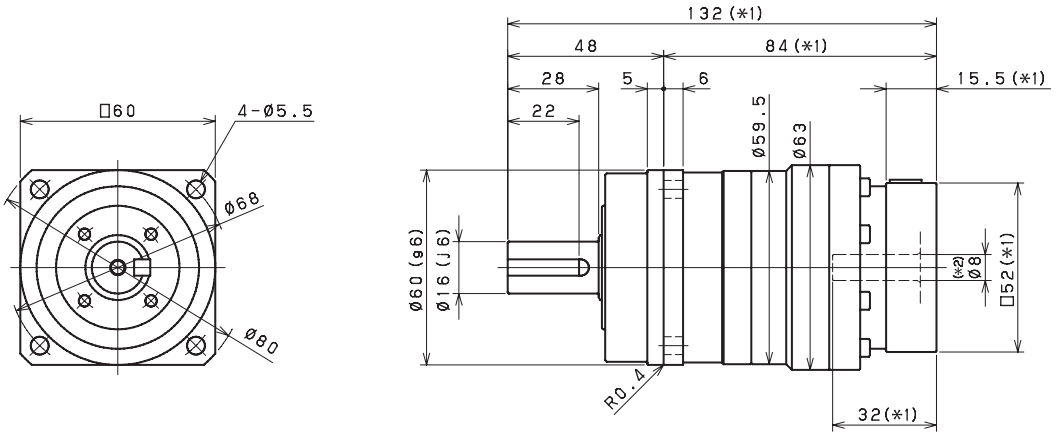

Input bore size ≦φ14 mm

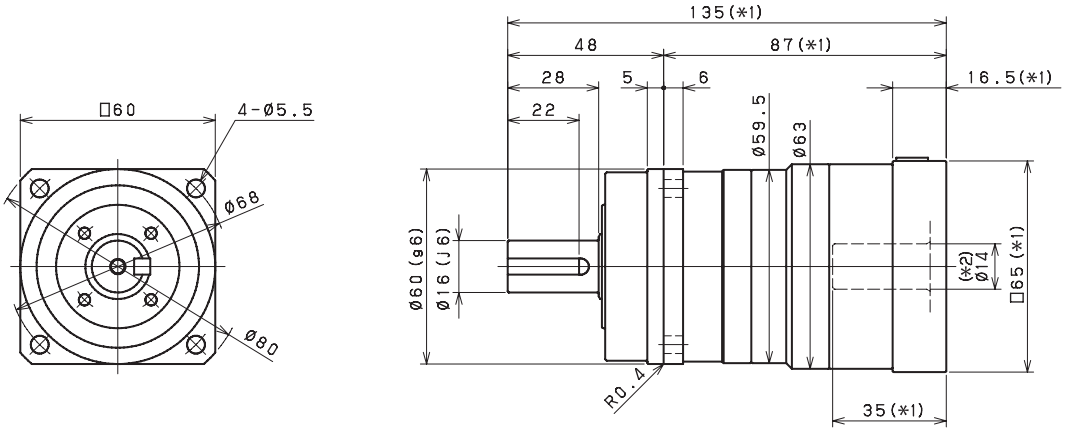

Input bore size ≦φ19 mm

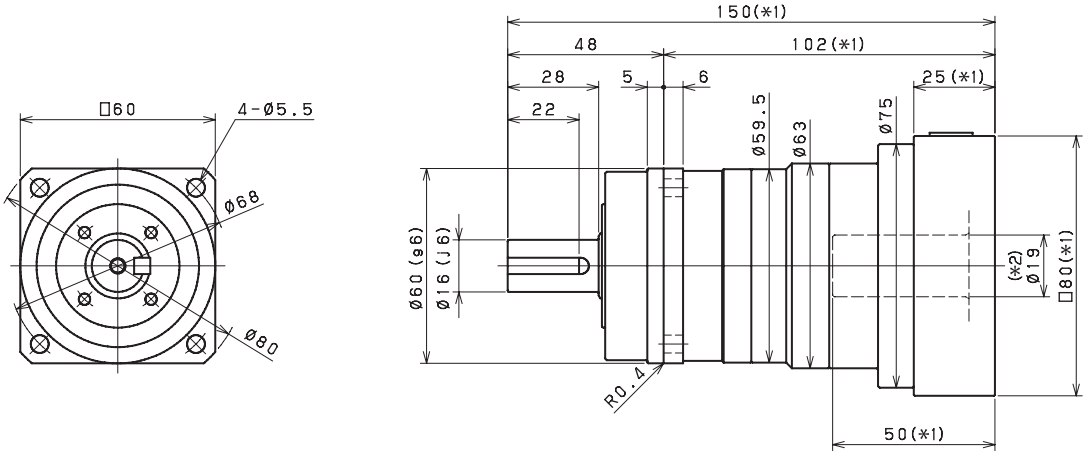

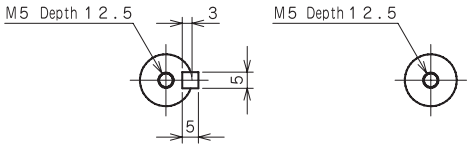

Keyed shaft　　Smooth shaft

*1) Length will vary depending on motor

*2) Bushing will be inserted to adapt to motor shaft

VRS o6o 2-Stage Dimensions

Input bore size ≦φ8 mm

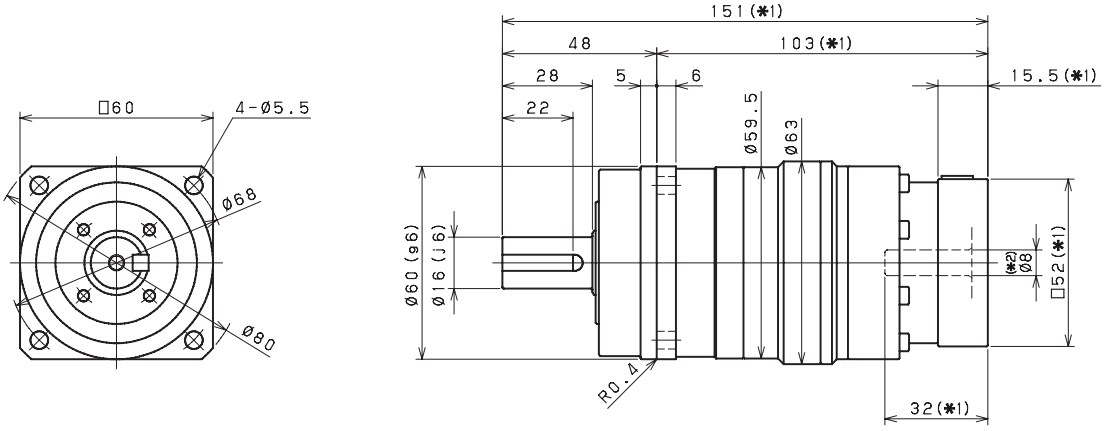

Input bore size ≦φ14 mm

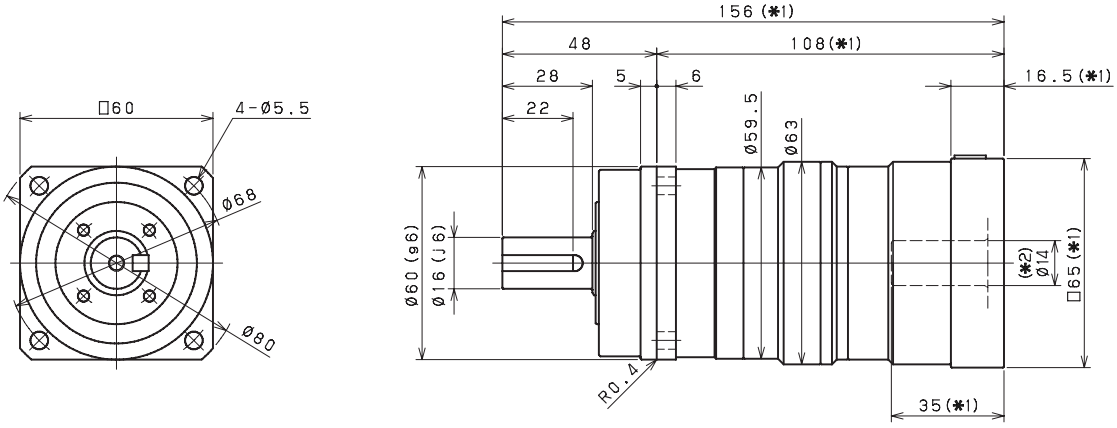

Input bore size ≦φ19 mm

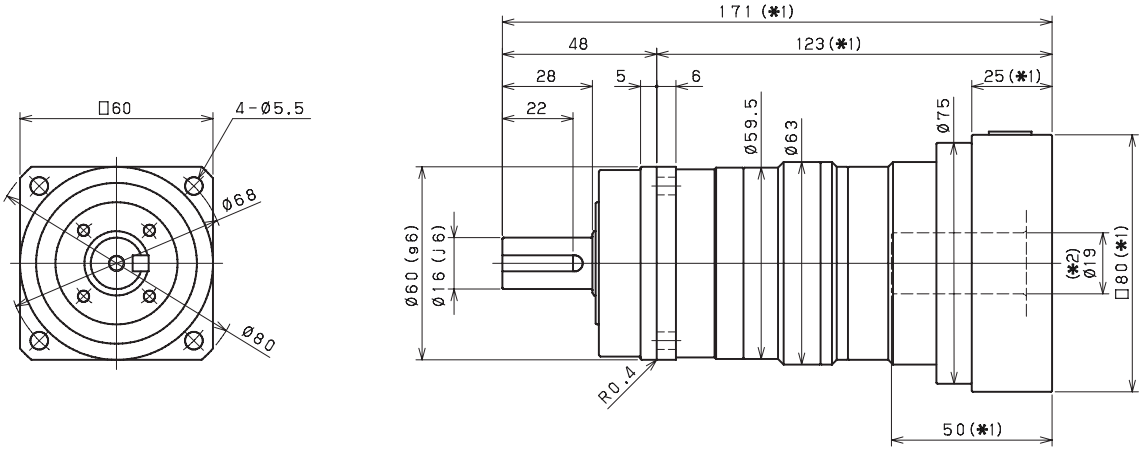

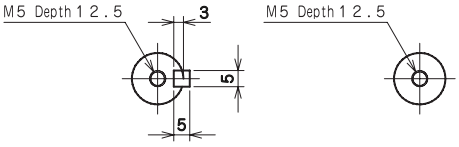

Keyed shaft　　Smooth shaft

*1) Length will vary depending on motor

*2) Bushing will be inserted to adapt to motor shaft

VRS 075 1-Stage Specifications

Frame Size	**075**									
Ratio	Unit	Note	3	4	5	6	7	8	9	10
Nominal Output Torque	[Nm]	*1	53	77	84	84	84	84	84	84
Maximum Acceleration Torque	[Nm]	*2	108	165	165	165	165	165	112	112
Maximum Torque	[Nm]	*3	135	200	200	195	195	190	145	145
Emergency Stop Torque	[Nm]	*4	200	250	250	250	250	250	200	200
Nominal Input Speed	[rpm]	*5	2900	2900	2900	2900	3100	3100	3100	3100
Maximum Input Speed	[rpm]	*6	7500	7500	7500	7500	7500	7500	7500	7500
No Load Running Torque	[Nm]	*7	0.35							
Maximum Radial Load	[N]	*8	4300							
Maximum Axial Load	[N]	*9	3900							
Moment of Inertia (≤ Ø 8)	[kgcm2]	--	--	--	--	--	--	--	--	--
Moment of Inertia (≤ Ø 14)	[kgcm2]	--	0.68	0.48	0.39	0.34	0.32	0.31	0.30	0.29
Moment of Inertia (≤ Ø 19)	[kgcm2]	--	1.1	0.87	0.79	0.74	0.72	0.71	0.70	0.69
Moment of Inertia (≤ Ø 28)	[kgcm2]	--	2.9	2.6	2.6	2.5	2.5	2.5	2.5	2.4
Efficiency	[%]	*10	95							
Torsional Rigidity	[Nm/arc-min]	*11	10							
Maximum Torsional Backlash	[arc-min]	--	Standard ≤ 3 / Reduced ≤ 2							
Noise Level	dB [A]	*12	≤ 67							
Protection Class	--	*13	IP54 (IP65)							
Ambient Temperature	[°C]	--	0-40							
Permitted Housing Temperature	[°C]	--	90							
Weight	[kg]	*14	3.4							

VRS 075 2-Stage Specifications

Frame Size	**075**									
Ratio	Unit	Note	15	16	20	25	28	30	35	40
Nominal Output Torque	[Nm]	*1	65	80	86	106	118	88	118	118
Maximum Acceleration Torque	[Nm]	*2	108	165	165	165	165	108	165	165
Maximum Torque	[Nm]	*3	108	165	165	165	165	108	165	165
Emergency Stop Torque	[Nm]	*4	200	250	250	250	250	200	250	250
Nominal Input Speed	[rpm]	*5	3500	3500	3500	3500	3500	3500	3500	3500
Maximum Input Speed	[rpm]	*6	8500	8500	8500	8500	8500	8500	8500	8500
No Load Running Torque	[Nm]	*7	0.06							
Maximum Radial Load	[N]	*8	4300							
Maximum Axial Load	[N]	*9	3900							
Moment of Inertia (≤ Ø 8)	[kgcm2]	--	0.20	0.25	0.19	0.19	0.24	0.12	0.18	0.11
Moment of Inertia (≤ Ø 14)	[kgcm2]	--	0.36	0.41	0.35	0.35	0.40	0.28	0.34	0.27
Moment of Inertia (≤ Ø 19)	[kgcm2]	--	0.75	0.79	0.74	0.73	0.78	0.67	0.73	0.67
Moment of Inertia (≤ Ø 28)	[kgcm2]	--	2.5	2.5	2.5	2.5	2.5	2.4	2.5	2.4
Efficiency	[%]	*10	90							
Torsional Rigidity	[Nm/arc-min]	*11	10							
Maximum Torsional Backlash	[arc-min]	--	≤ 3							
Noise Level	dB [A]	*12	≤ 67							
Protection Class	--	*13	IP54 (IP65)							
Ambient Temperature	[°C]	--	0-40							
Permitted Housing Temperature	[°C]	--	90							
Weight	[kg]	*14	3.8							

VRS 075 2-Stage Specifications

Frame Size	**075**								
Ratio	Unit	Note	45	50	60	70	80	90	100
Nominal Output Torque	[Nm]	*1	88	118	118	118	118	88	88
Maximum Acceleration Torque	[Nm]	*2	112	165	165	165	165	112	112
Maximum Torque	[Nm]	*3	112	165	165	165	165	112	112
Emergency Stop Torque	[Nm]	*4	200	250	250	250	250	200	200
Nominal Input Speed	[rpm]	*5	3500	3800	3800	4500	4500	4500	4500
Maximum Input Speed	[rpm]	*6	8500	8500	8500	8500	8500	8500	8500
No Load Running Torque	[Nm]	*7	0.06						
Maximum Radial Load	[N]	*8	4300						
Maximum Axial Load	[N]	*9	3900						
Moment of Inertia (≤ Ø 8)	[kgcm2]	--	0.18	0.11	0.11	0.11	0.11	0.11	0.11
Moment of Inertia (≤ Ø 14)	[kgcm2]	--	0.34	0.27	0.27	0.27	0.27	0.27	0.27
Moment of Inertia (≤ Ø 19)	[kgcm2]	--	0.73	0.67	0.67	0.67	0.67	0.67	0.67
Moment of Inertia (≤ Ø 28)	[kgcm2]	--	2.5	2.4	2.4	2.4	2.4	2.4	2.4
Efficiency	[%]	*10	90						
Torsional Rigidity	[Nm/arc-min]	*11	10						
Maximum Torsional Backlash	[arc-min]	--	≤ 3						
Noise Level	dB [A]	*12	≤ 67						
Protection Class	--	*13	IP54 (IP65)						
Ambient Temperature	[°C]	--	0-40						
Permitted Housing Temperature	[°C]	--	90						
Weight	[kg]	*14	3.8						

*1) At nominal input speed, service life is 20,000 hours

*2) The maximum torque when starting or stopping operation. Apply Cycle Factor f_0, found on page 468, for higher duty cycle applications

*3) Permitted 10,000 times during service life. Based on 10% of maximum radial load and smooth output shaft

*4) The maximum torque allowed under a stress situation. Permitted 1,000 times during service life

*5) The average input speed at nominal input torque. Maintain housing temperature below permitted value

*6) The maximum intermittent input speed

*7) Torque at no load applied to the input shaft at nominal input speed

*8) The maximum radial load that the gearbox can accept

*9) The maximum axial load that the gearbox can accept

*10) The efficiency at the nominal output torque rating

*11) This does not include lost motion

*12) Contact Nidec Drive Technology for the testing conditions and environment

*13) IP65 (wash-down) is available as an option. Contact Nidec Drive Technology for more details

*14) Weight may vary slightly between models

VRS 075 1-Stage Dimensions

Input bore size ≦φ14 mm

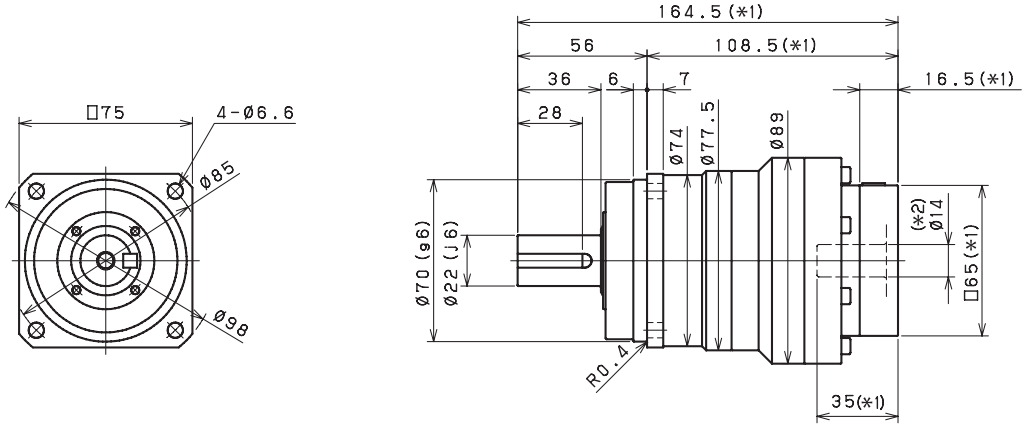

Input bore size ≦φ19 mm

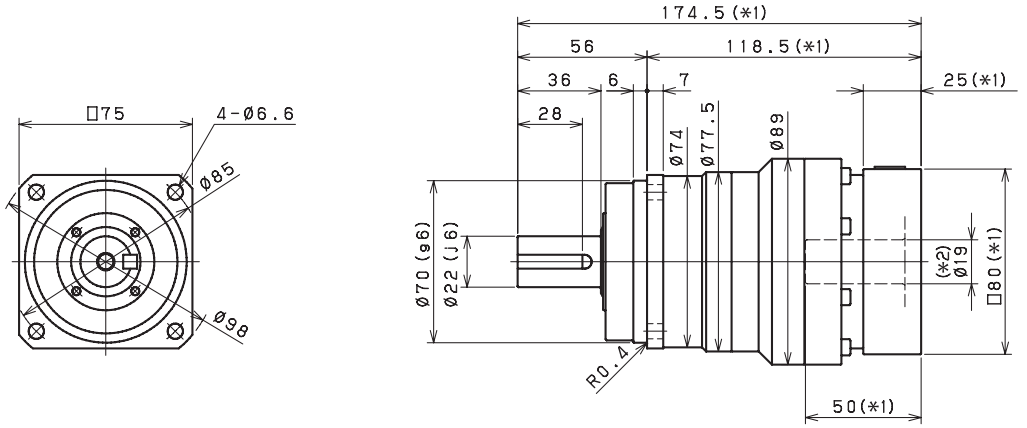

Input bore size ≦φ28 mm

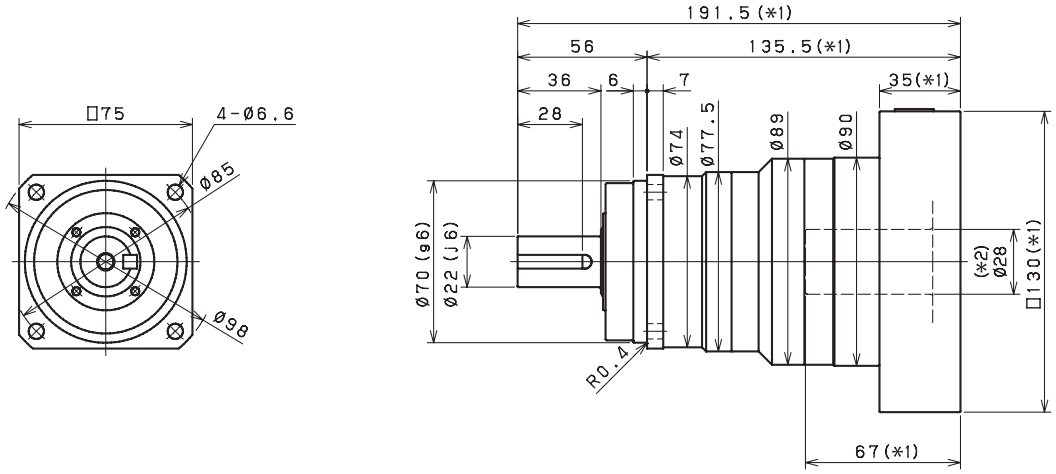

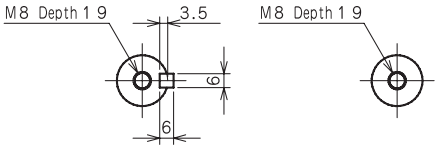

Keyed shaft Smooth shaft

*1) Length will vary depending on motor

*2) Bushing will be inserted to adapt to motor shaft

VRS 075 2-Stage Dimensions

Input bore size ≦φ8 mm

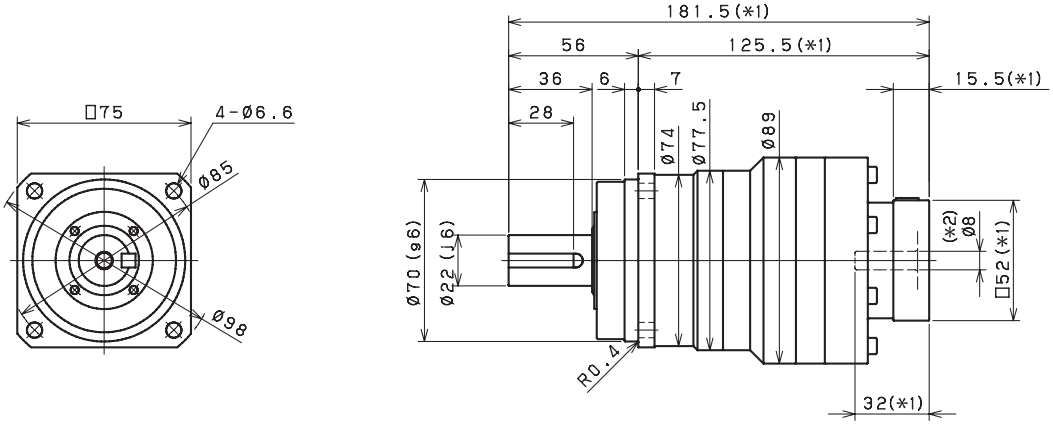

Input bore size ≦φ14 mm

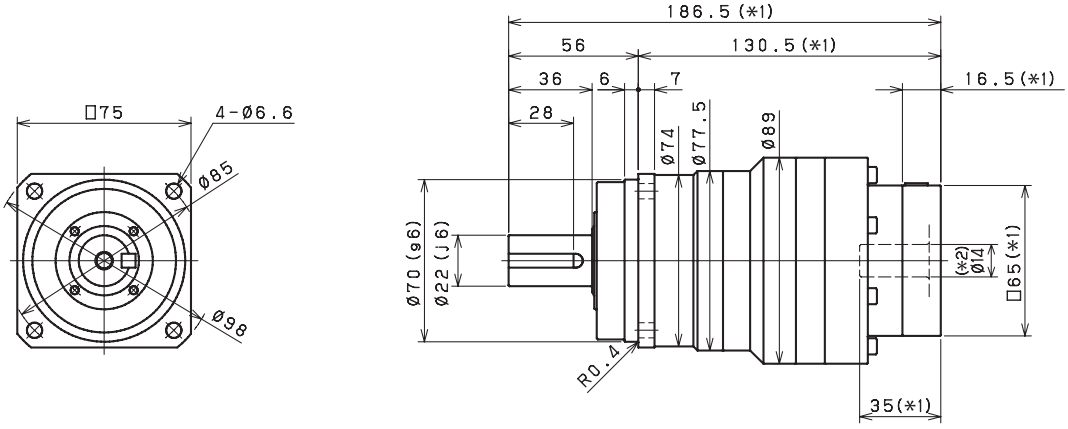

Input bore size ≦φ19 mm (*3)

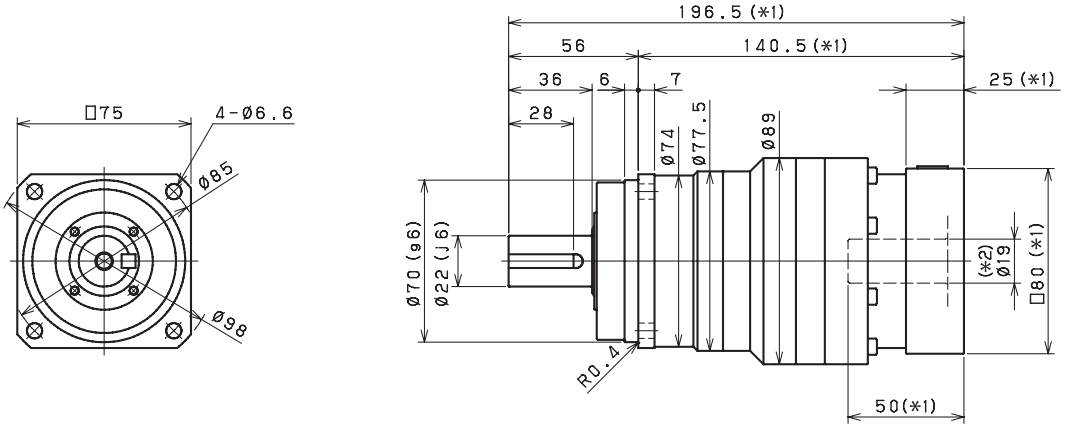

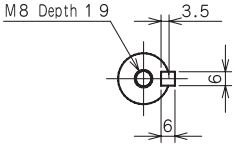

Keyed shaft

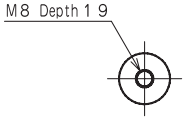

Smooth shaft

*1) Length will vary depending on motor

*2) Bushing will be inserted to adapt to motor shaft

*3) 28mm input bore is available for this frame size. Use our online configurator to make your selection or contact us for assistance

VRS 100 1-Stage Specifications

Frame Size			**100**							
Ratio	Unit	Note	3	4	5	6	7	8	9	10
Nominal Output Torque	[Nm]	*1	128	146	190	190	190	190	190	190
Maximum Acceleration Torque	[Nm]	*2	270	390	390	390	390	390	292	292
Maximum Torque	[Nm]	*3	340	490	490	480	480	480	370	370
Emergency Stop Torque	[Nm]	*4	500	625	625	625	625	625	500	500
Nominal Input Speed	[rpm]	*5	2800	2800	2800	2800	2800	2800	2800	2800
Maximum Input Speed	[rpm]	*6	5500	5500	5500	5500	5500	5500	5500	5500
No Load Running Torque	[Nm]	*7	1.30							
Maximum Radial Load	[N]	*8	7000							
Maximum Axial Load	[N]	*9	6300							
Moment of Inertia (≤ Ø 8)	[kgcm2]	--	--	--	--	--	--	--	--	--
Moment of Inertia (≤ Ø 14)	[kgcm2]	--	--	--	--	--	--	--	--	--
Moment of Inertia (≤ Ø 19)	[kgcm2]	--	3.1	1.9	1.4	1.1	1.0	0.91	0.85	0.82
Moment of Inertia (≤ Ø 28)	[kgcm2]	--	5.0	3.7	3.1	2.8	2.7	2.6	2.6	2.5
Moment of Inertia (≤ Ø 38)	[kgcm2]	--	12	10	9.5	9.2	9.1	8.9	8.9	8.8
Efficiency	[%]	*10	95							
Torsional Rigidity	[Nm/arc-min]	*11	31							
Maximum Torsional Backlash	[arc-min]	--	Standard ≤ 3 / Reduced ≤ 1							
Noise Level	dB [A]	*12	≤ 71							
Protection Class	--	*13	IP54 (IP65)							
Ambient Temperature	[°C]	--	0-40							
Permitted Housing Temperature	[°C]	--	90							
Weight	[kg]	*14	8.1							

VRS 100 2-Stage Specifications

Frame Size			**100**							
Ratio	Unit	Note	15	16	20	25	28	30	35	40
Nominal Output Torque	[Nm]	*1	174	200	220	280	280	220	280	270
Maximum Acceleration Torque	[Nm]	*2	270	390	390	390	390	270	390	390
Maximum Torque	[Nm]	*3	270	390	390	390	390	270	390	390
Emergency Stop Torque	[Nm]	*4	500	625	625	625	625	500	625	625
Nominal Input Speed	[rpm]	*5	3100	3100	3100	3100	3100	3100	3100	3100
Maximum Input Speed	[rpm]	*6	6500	6500	6500	6500	6500	6500	6500	6500
No Load Running Torque	[Nm]	*7	0.42							
Maximum Radial Load	[N]	*8	7000							
Maximum Axial Load	[N]	*9	6300							
Moment of Inertia (≤ Ø 8)	[kgcm2]	--	--	--	--	--	--	--	--	--
Moment of Inertia (≤ Ø 14)	[kgcm2]	--	0.76	0.97	0.72	0.70	0.92	0.38	0.68	0.37
Moment of Inertia (≤ Ø 19)	[kgcm2]	--	1.1	1.4	1.1	1.1	1.3	0.78	1.1	0.77
Moment of Inertia (≤ Ø 28)	[kgcm2]	--	2.9	3.1	2.8	2.8	3	2.5	2.8	2.5
Moment of Inertia (≤ Ø 38)	[kgcm2]	--	9.2	9.4	9.1	9.1	9.3	8.8	9.1	8.8
Efficiency	[%]	*10	90							
Torsional Rigidity	[Nm/arc-min]	*11	31							
Maximum Torsional Backlash	[arc-min]	--	≤ 3							
Noise Level	dB [A]	*12	≤ 71							
Protection Class	--	*13	IP54 (IP65)							
Ambient Temperature	[°C]	--	0-40							
Permitted Housing Temperature	[°C]	--	90							
Weight	[kg]	*14	8.8							

VRS 100 2-Stage Specifications

Frame Size			**100**						
Ratio	Unit	Note	45	50	60	70	80	90	100
Nominal Output Torque	[Nm]	*1	220	280	280	280	280	220	220
Maximum Acceleration Torque	[Nm]	*2	292	390	390	390	390	292	292
Maximum Torque	[Nm]	*3	292	390	390	390	390	292	292
Emergency Stop Torque	[Nm]	*4	500	625	625	625	625	500	500
Nominal Input Speed	[rpm]	*5	3100	3500	3500	4200	4200	4200	4200
Maximum Input Speed	[rpm]	*6	6500	6500	6500	6500	6500	6500	6500
No Load Running Torque	[Nm]	*7	0.42						
Maximum Radial Load	[N]	*8	7000						
Maximum Axial Load	[N]	*9	6300						
Moment of Inertia (≤ Ø 8)	[kgcm2]	--	--	0.19	0.19	0.19	0.19	0.19	0.19
Moment of Inertia (≤ Ø 14)	[kgcm2]	--	0.68	0.36	0.36	0.36	0.36	0.36	0.36
Moment of Inertia (≤ Ø 19)	[kgcm2]	--	1.1	0.76	0.76	0.76	0.76	0.76	0.76
Moment of Inertia (≤ Ø 28)	[kgcm2]	--	2.8	2.5	2.5	2.5	2.5	2.5	2.5
Moment of Inertia (≤ Ø 38)	[kgcm2]	--	9.1	8.8	8.8	8.8	8.8	8.8	8.8
Efficiency	[%]	*10	90						
Torsional Rigidity	[Nm/arc-min]	*11	31						
Maximum Torsional Backlash	[arc-min]	--	≤ 3						
Noise Level	dB [A]	*12	≤ 71						
Protection Class	--	*13	IP54 (IP65)						
Ambient Temperature	[°C]	--	0-40						
Permitted Housing Temperature	[°C]	--	90						
Weight	[kg]	*14	8.8						

*1) At nominal input speed, service life is 20,000 hours

*2) The maximum torque when starting or stopping operation. Apply Cycle Factor $\mathbf{f_0}$, found on page 468, for higher duty cycle applications

*3) Permitted 10,000 times during service life. Based on 10% of maximum radial load and smooth output shaft

*4) The maximum torque allowed under a stress situation. Permitted 1,000 times during service life

*5) The average input speed at nominal input torque. Maintain housing temperature below permitted value

*6) The maximum intermittent input speed

*7) Torque at no load applied to the input shaft at nominal input speed

*8) The maximum radial load that the gearbox can accept

*9) The maximum axial load that the gearbox can accept

*10) The efficiency at the nominal output torque rating

*11) This does not include lost motion

*12) Contact Nidec Drive Technology for the testing conditions and environment

*13) IP65 (wash-down) is available as an option. Contact Nidec Drive Technology for more details

*14) Weight may vary slightly between models

VRS 100 1-Stage Dimensions

Input bore size ≦φ19 mm

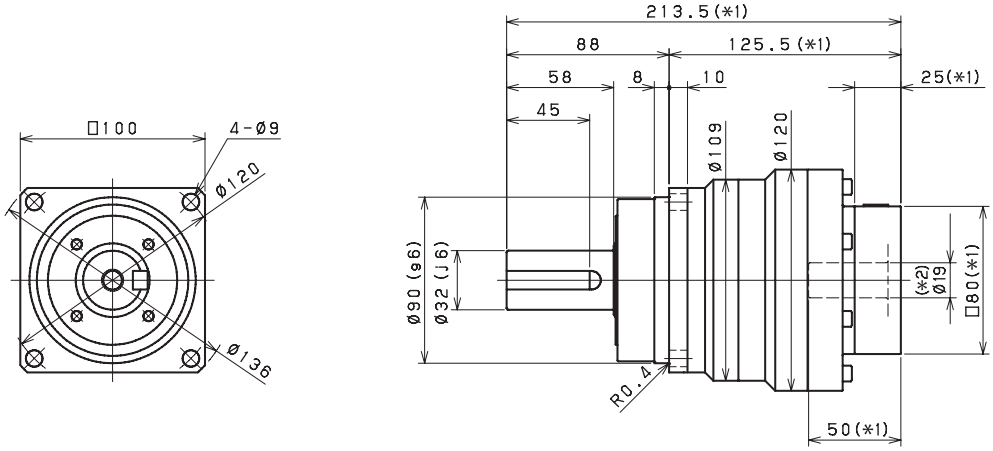

Input bore size ≦φ28 mm

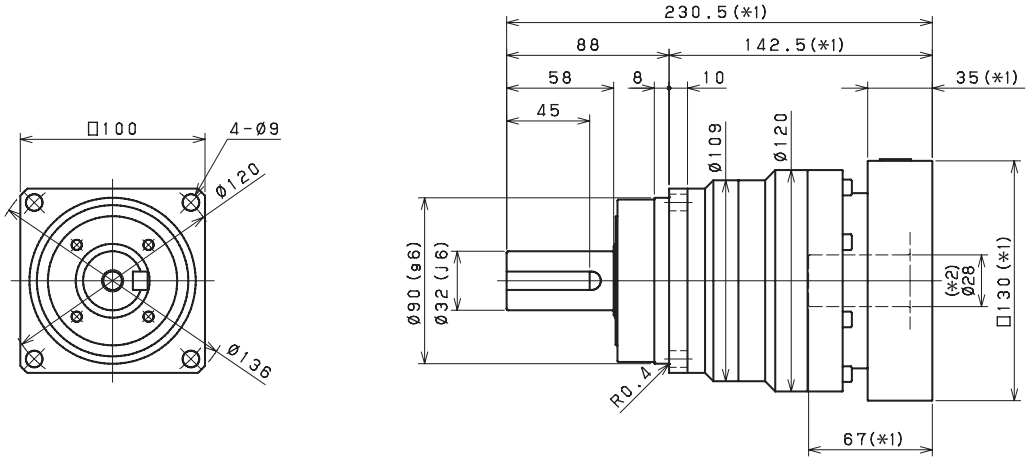

Input bore size ≦φ38 mm

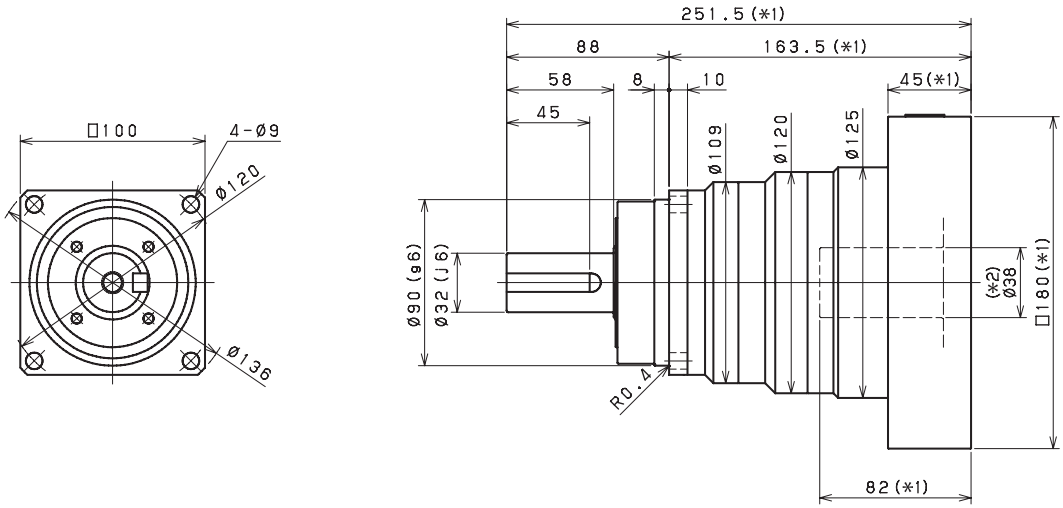

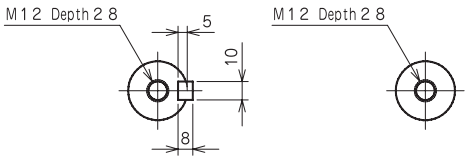

Keyed shaft　　Smooth shaft

*1) Length will vary depending on motor

*2) Bushing will be inserted to adapt to motor shaft

VRS 100 2-Stage Dimensions

Input bore size ≦φ14 mm

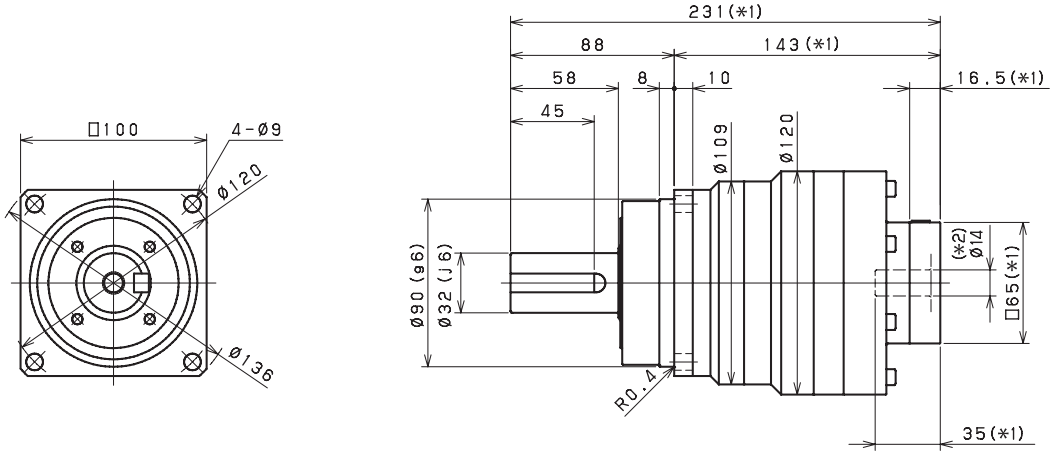

Input bore size ≦φ19 mm

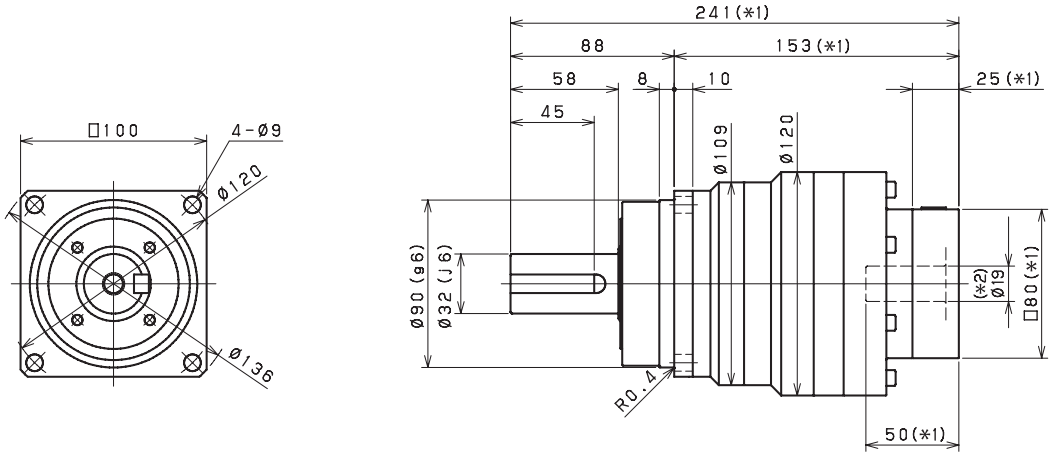

Input bore size ≦φ28 mm (*3)

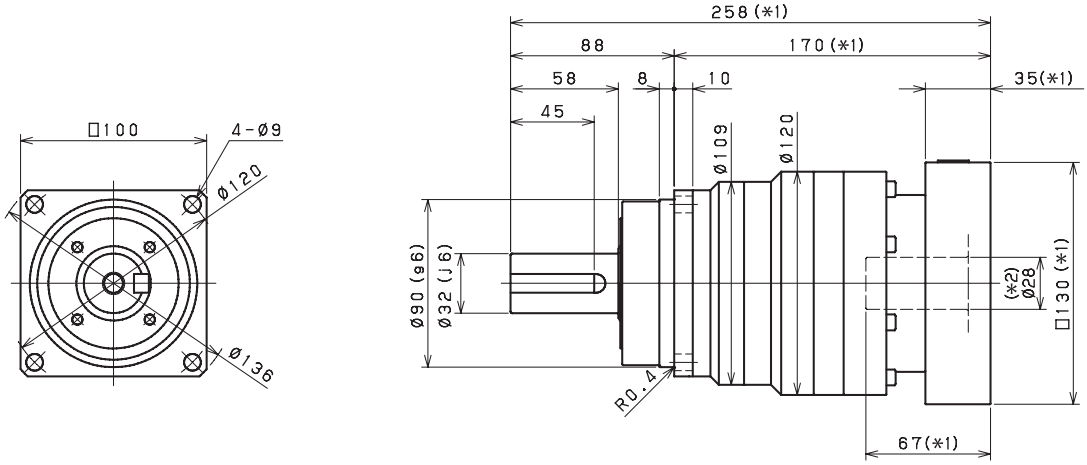

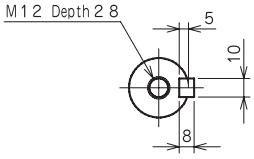

Keyed shaft

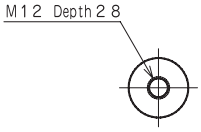

Smooth shaft

*1) Length will vary depending on motor

*2) Bushing will be inserted to adapt to motor shaft

*3) 38mm input bore is available for this frame size. Use our online configurator to make your selection or contact us for assistance

VRS 140 1-Stage Specifications

Frame Size	**140**									
Ratio	Unit	Note	3	4	5	6	7	8	9	10
Nominal Output Torque	[Nm]	*1	248	280	380	380	380	380	380	380
Maximum Acceleration Torque	[Nm]	*2	560	840	840	840	840	840	610	610
Maximum Torque	[Nm]	*3	630	1000	1000	950	950	950	730	730
Emergency Stop Torque	[Nm]	*4	1000	1250	1250	1250	1250	1250	1000	1000
Nominal Input Speed	[rpm]	*5	2100	2100	2100	2100	2600	2600	2600	2600
Maximum Input Speed	[rpm]	*6	5000	5000	5000	5000	5000	5000	5000	5000
No Load Running Torque	[Nm]	*7	1.63							
Maximum Radial Load	[N]	*8	10000							
Maximum Axial Load	[N]	*9	9000							
Moment of Inertia (≤ Ø 14)	[kgcm2]	--	--	--	--	--	--	--	--	--
Moment of Inertia (≤ Ø 19)	[kgcm2]	--	--	--	--	--	--	--	--	--
Moment of Inertia (≤ Ø 28)	[kgcm2]	--	12	7.2	5.2	4.3	3.8	3.5	3.3	3.2
Moment of Inertia (≤ Ø 38)	[kgcm2]	--	18	14	12	11	10	9.9	9.7	9.6
Moment of Inertia (≤ Ø 48)	[kgcm2]	--	35	29	27	26	25	25	25	25
Efficiency	[%]	*10	95							
Torsional Rigidity	[Nm/arc-min]	*11	60							
Maximum Torsional Backlash	[arc-min]	--	Standard ≤ 3 / Reduced ≤ 1							
Noise Level	dB [A]	*12	≤ 67							
Protection Class	--	*13	IP54 (IP65)							
Ambient Temperature	[°C]	--	0-40							
Permitted Housing Temperature	[°C]	--	90							
Weight	[kg]	*14	17							

VRS 140 2-Stage Specifications

Frame Size	**140**									
Ratio	Unit	Note	15	16	20	25	28	30	35	40
Nominal Output Torque	[Nm]	*1	360	380	410	590	590	440	590	500
Maximum Acceleration Torque	[Nm]	*2	560	840	840	840	840	560	840	840
Maximum Torque	[Nm]	*3	560	840	840	840	840	560	840	840
Emergency Stop Torque	[Nm]	*4	1000	1250	1250	1250	1250	1000	1250	1250
Nominal Input Speed	[rpm]	*5	2900	2900	2900	2900	2900	2900	2900	2900
Maximum Input Speed	[rpm]	*6	6000	6000	6000	6000	6000	6000	6000	6000
No Load Running Torque	[Nm]	*7	0.56							
Maximum Radial Load	[N]	*8	10000							
Maximum Axial Load	[N]	*9	9000							
Moment of Inertia (≤ Ø 14)	[kgcm2]	--	--	--	--	--	--	--	--	--
Moment of Inertia (≤ Ø 19)	[kgcm2]	--	2.6	3.5	2.4	2.4	3.3	1.1	2.3	1.1
Moment of Inertia (≤ Ø 28)	[kgcm2]	--	4.4	5.3	4.2	4.1	5.1	2.9	4.1	2.8
Moment of Inertia (≤ Ø 38)	[kgcm2]	--	11	12	10	10	11	9.2	10	9.1
Moment of Inertia (≤ Ø 48)	[kgcm2]	--	26	27	25	25	26	24	25	24
Efficiency	[%]	*10	90							
Torsional Rigidity	[Nm/arc-min]	*11	60							
Maximum Torsional Backlash	[arc-min]	--	≤ 3							
Noise Level	dB [A]	*12	≤ 67							
Protection Class	--	*13	IP54 (IP65)							
Ambient Temperature	[°C]	--	0-40							
Permitted Housing Temperature	[°C]	--	90							
Weight	[kg]	*14	19							

VRS 140 2-Stage Specifications

Frame Size			**140**						
Ratio	Unit	Note	45	50	60	70	80	90	100
Nominal Output Torque	[Nm]	*1	440	590	590	590	590	440	440
Maximum Acceleration Torque	[Nm]	*2	610	840	840	840	840	610	610
Maximum Torque	[Nm]	*3	610	840	840	840	840	610	610
Emergency Stop Torque	[Nm]	*4	1000	1250	1250	1250	1250	1000	1000
Nominal Input Speed	[rpm]	*5	2900	3200	3200	3900	3900	3900	3900
Maximum Input Speed	[rpm]	*6	6000	6000	6000	6000	6000	6000	6000
No Load Running Torque	[Nm]	*7	0.56						
Maximum Radial Load	[N]	*8	10000						
Maximum Axial Load	[N]	*9	9000						
Moment of Inertia (≤ Ø 14)	[kgcm2]	--	--	0.65	0.64	0.64	0.63	0.63	0.63
Moment of Inertia (≤ Ø 19)	[kgcm2]	--	2.3	1.1	1.1	1.1	1.1	1.1	1.1
Moment of Inertia (≤ Ø 28)	[kgcm2]	--	4.0	2.8	2.8	2.8	2.8	2.8	2.8
Moment of Inertia (≤ Ø 38)	[kgcm2]	--	10	9.1	9.1	9.1	9.1	9.1	9.1
Moment of Inertia (≤ Ø 48)	[kgcm2]	--	25	24	24	24	24	24	24
Efficiency	[%]	*10	90						
Torsional Rigidity	[Nm/arc-min]	*11	60						
Maximum Torsional Backlash	[arc-min]	--	≤ 3						
Noise Level	dB [A]	*12	≤ 67						
Protection Class	--	*13	IP54 (IP65)						
Ambient Temperature	[°C]	--	0-40						
Permitted Housing Temperature	[°C]	--	90						
Weight	[kg]	*14	19						

*1) At nominal input speed, service life is 20,000 hours

*2) The maximum torque when starting or stopping operation. Apply Cycle Factor $\mathbf{f_0}$, found on page 468, for higher duty cycle applications

*3) Permitted 10,000 times during service life. Based on 10% of maximum radial load and smooth output shaft

*4) The maximum torque allowed under a stress situation. Permitted 1,000 times during service life

*5) The average input speed at nominal input torque. Maintain housing temperature below permitted value

*6) The maximum intermittent input speed

*7) Torque at no load applied to the input shaft at nominal input speed

*8) The maximum radial load that the gearbox can accept

*9) The maximum axial load that the gearbox can accept

*10) The efficiency at the nominal output torque rating

*11) This does not include lost motion

*12) Contact Nidec Drive Technology for the testing conditions and environment

*13) IP65 (wash-down) is available as an option. Contact Nidec Drive Technology for more details

*14) Weight may vary slightly between models

VRS 140 1-Stage Dimensions

Input bore size ≦φ28 mm

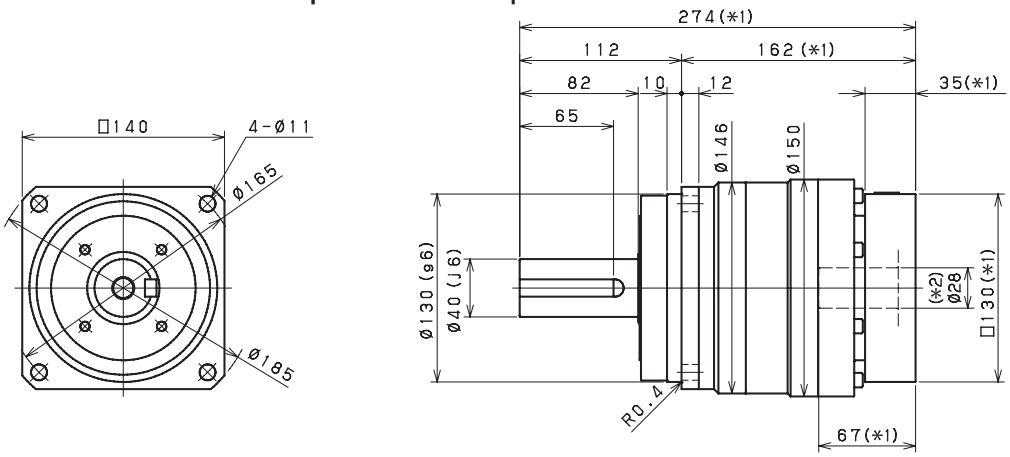

Input bore size ≦φ38 mm

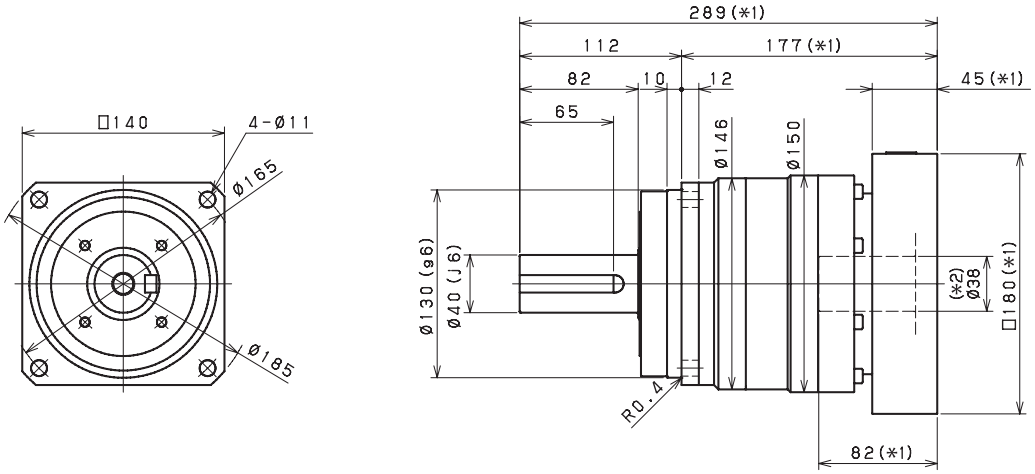

Input bore size ≦φ48 mm

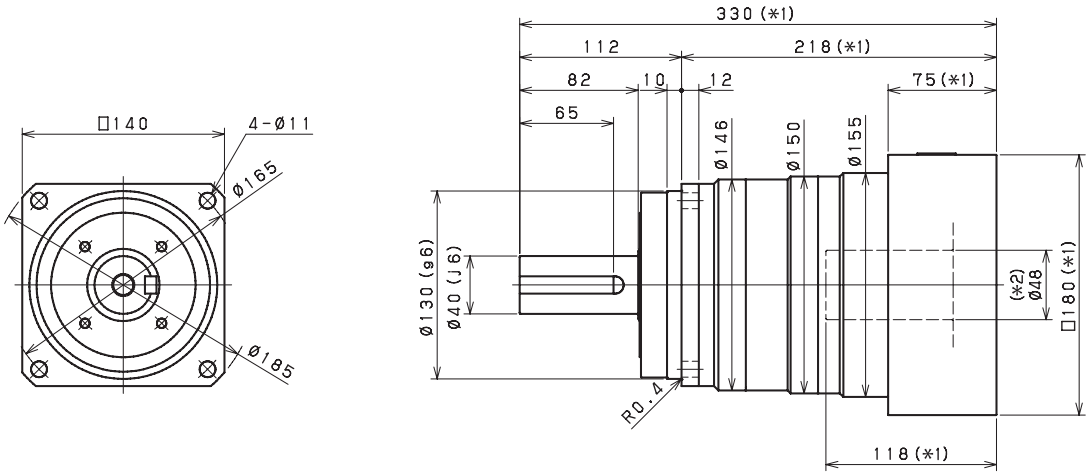

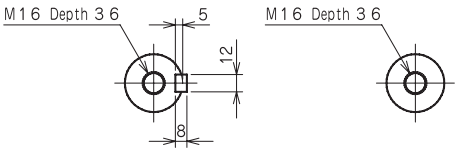

Keyed shaft　　Smooth shaft

*1) Length will vary depending on motor

*2) Bushing will be inserted to adapt to motor shaft

VRS 140 2-Stage Dimensions

Input bore size ≦φ19 mm

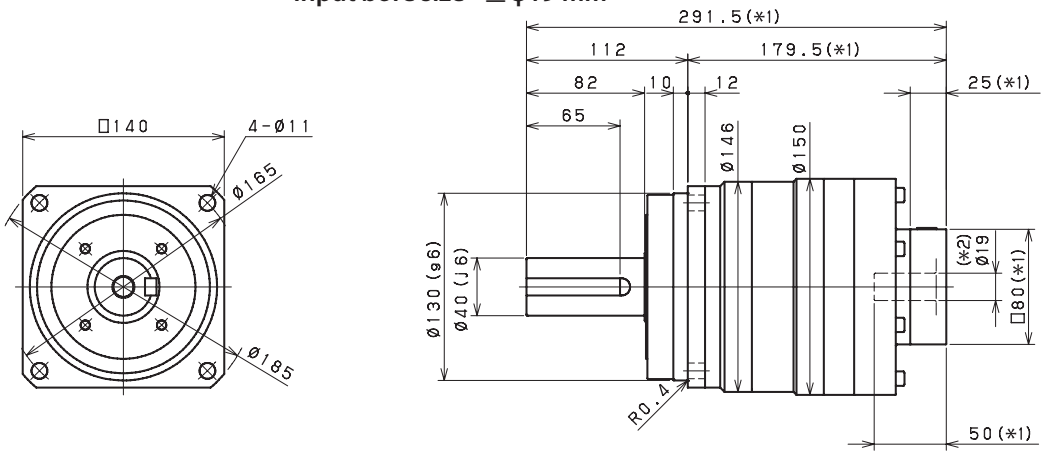

Input bore size ≦φ28 mm

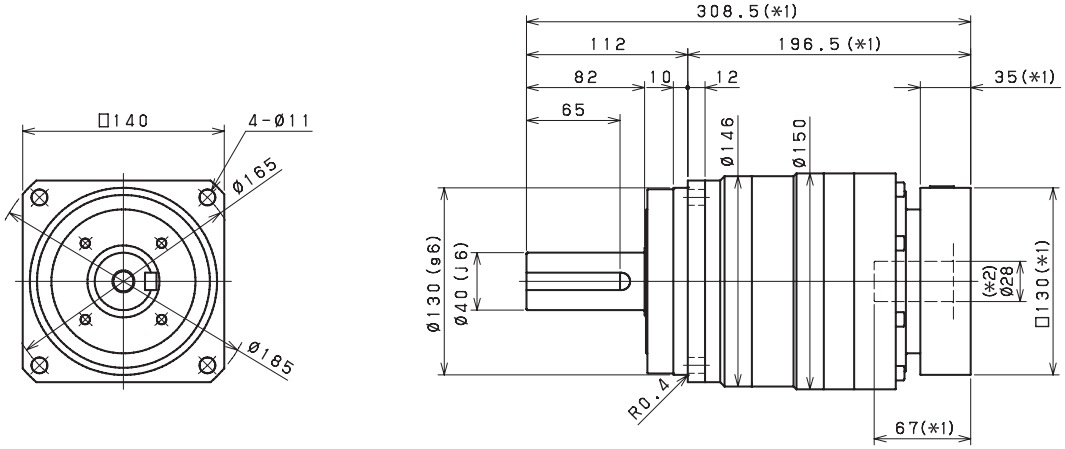

Input bore size ≦φ38 mm (*3)

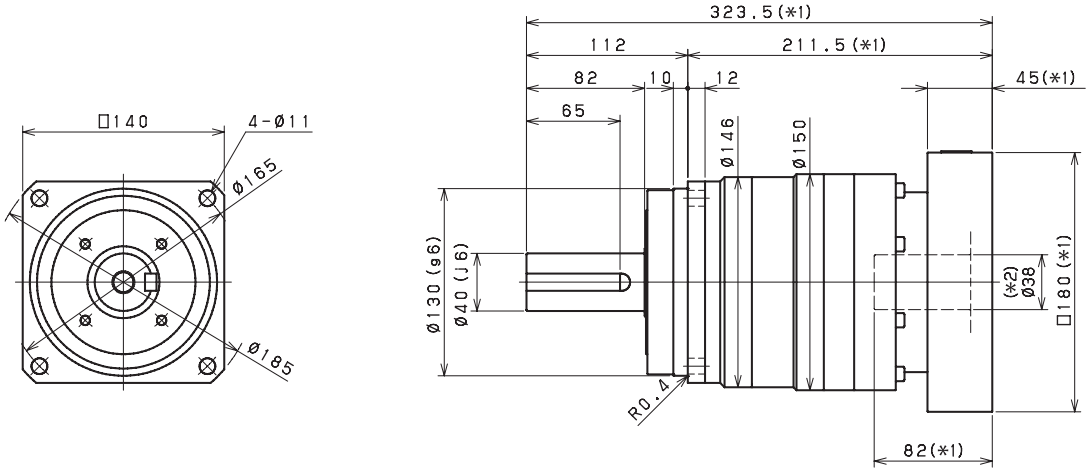

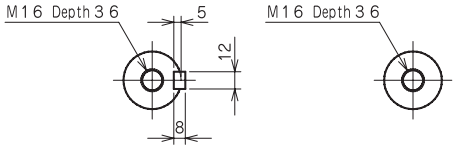

Keyed shaft　　Smooth shaft

*1) Length will vary depending on motor

*2) Bushing will be inserted to adapt to motor shaft

*3) 48mm input bore is available for this frame size. Use our online configurator to make your selection or contact us for assistance

VRS 180 1-Stage Specifications

Frame Size			**180**							
Ratio	Unit	Note	3	4	5	6	7	8	9	10
Nominal Output Torque	[Nm]	*1	570	850	910	910	910	910	910	910
Maximum Acceleration Torque	[Nm]	*2	1300	1850	1850	1850	1850	1850	1350	1350
Maximum Torque	[Nm]	*3	1450	2250	2250	2150	2150	2150	1750	1750
Emergency Stop Torque	[Nm]	*4	2200	2750	2750	2750	2750	2750	2200	2200
Nominal Input Speed	[rpm]	*5	1500	1500	1500	1500	2300	2300	2300	2300
Maximum Input Speed	[rpm]	*6	4500	4500	4500	4500	4500	4500	4500	4500
No Load Running Torque	[Nm]	*7	2.68							
Maximum Radial Load	[N]	*8	19000							
Maximum Axial Load	[N]	*9	17000							
Moment of Inertia (≤ Ø 19)	[kgcm2]	--	--	--	--	--	--	--	--	--
Moment of Inertia (≤ Ø 28)	[kgcm2]	--	--	--	--	--	--	--	--	--
Moment of Inertia (≤ Ø 38)	[kgcm2]	--	41	25	18	15	13	12	12	11
Moment of Inertia (≤ Ø 48)	[kgcm2]	--	55	40	33	30	29	27	27	26
Moment of Inertia (≤ Ø 65)	[kgcm2]	--	110	84	78	74	73	71	71	70
Efficiency	[%]	*10	95							
Torsional Rigidity	[Nm/arc-min]	*11	175							
Maximum Torsional Backlash	[arc-min]	--	Standard ≤ 3 / Reduced ≤ 1							
Noise Level	dB [A]	*12	≤ 67							
Protection Class	--	*13	IP54 (IP65)							
Ambient Temperature	[°C]	--	0-40							
Permitted Housing Temperature	[°C]	--	90							
Weight	[kg]	*14	39							

VRS 180 2-Stage Specifications

Frame Size			**180**							
Ratio	Unit	Note	15	16	20	25	28	30	35	40
Nominal Output Torque	[Nm]	*1	660	850	910	1100	1300	930	1300	1200
Maximum Acceleration Torque	[Nm]	*2	1300	1850	1850	1850	1850	1300	1850	1850
Maximum Torque	[Nm]	*3	1300	1850	1850	1850	1850	1300	1850	1850
Emergency Stop Torque	[Nm]	*4	2200	2750	2750	2750	2750	2200	2750	2750
Nominal Input Speed	[rpm]	*5	2700	2700	2700	2700	2700	2700	2700	2700
Maximum Input Speed	[rpm]	*6	5000	5000	5000	5000	5000	5000	5000	5000
No Load Running Torque	[Nm]	*7	1.39							
Maximum Radial Load	[N]	*8	19000							
Maximum Axial Load	[N]	*9	17000							
Moment of Inertia (≤ Ø 19)	[kgcm2]	--	--	--	--	--	--	--	--	--
Moment of Inertia (≤ Ø 28)	[kgcm2]	--	8.7	11	8.1	7.8	11	4	7.6	3.9
Moment of Inertia (≤ Ø 38)	[kgcm2]	--	15	18	14	14	17	10	14	10
Moment of Inertia (≤ Ø 48)	[kgcm2]	--	30	32	29	29	32	25	29	25
Moment of Inertia (≤ Ø 65)	[kgcm2]	--	34	39	33	33	38	26	32	26
Efficiency	[%]	*10	90							
Torsional Rigidity	[Nm/arc-min]	*11	175							
Maximum Torsional Backlash	[arc-min]	--	≤ 3							
Noise Level	dB [A]	*12	≤ 67							
Protection Class	--	*13	IP54 (IP65)							
Ambient Temperature	[°C]	--	0-40							
Permitted Housing Temperature	[°C]	--	90							
Weight	[kg]	*14	40							

VRS 180 2-Stage Specifications

Frame Size			**180**						
Ratio	Unit	Note	45	50	60	70	80	90	100
Nominal Output Torque	[Nm]	*1	930	1300	1300	1300	1300	930	930
Maximum Acceleration Torque	[Nm]	*2	1350	1850	1850	1850	1850	1350	1350
Maximum Torque	[Nm]	*3	1350	1850	1850	1850	1850	1350	1350
Emergency Stop Torque	[Nm]	*4	2200	2750	2750	2750	2750	2200	2200
Nominal Input Speed	[rpm]	*5	2700	2900	2900	3400	3400	3400	3400
Maximum Input Speed	[rpm]	*6	5000	5000	5000	5000	5000	5000	5000
No Load Running Torque	[Nm]	*7	1.39						
Maximum Radial Load	[N]	*8	19000						
Maximum Axial Load	[N]	*9	17000						
Moment of Inertia (≤ Ø 19)	[kgcm2]	--	--	1.9	1.9	1.8	1.8	1.8	1.8
Moment of Inertia (≤ Ø 28)	[kgcm2]	--	7.6	3.8	3.8	3.8	3.7	3.7	3.7
Moment of Inertia (≤ Ø 38)	[kgcm2]	--	14	10	10	10	10	10	10
Moment of Inertia (≤ Ø 48)	[kgcm2]	--	29	25	25	25	25	25	25
Moment of Inertia (≤ Ø 65)	[kgcm2]	--	32	26	26	26	26	26	26
Efficiency	[%]	*10	90						
Torsional Rigidity	[Nm/arc-min]	*11	175						
Maximum Torsional Backlash	[arc-min]	--	≤ 3						
Noise Level	dB [A]	*12	≤ 67						
Protection Class	--	*13	IP54 (IP65)						
Ambient Temperature	[°C]	--	0-40						
Permitted Housing Temperature	[°C]	--	90						
Weight	[kg]	*14	40						

*1) At nominal input speed, service life is 20,000 hours

*2) The maximum torque when starting or stopping operation. Apply Cycle Factor f_0, found on page 468, for higher duty cycle applications

*3) Permitted 10,000 times during service life. Based on 10% of maximum radial load and smooth output shaft

*4) The maximum torque allowed under a stress situation. Permitted 1,000 times during service life

*5) The average input speed at nominal input torque. Maintain housing temperature below permitted value

*6) The maximum intermittent input speed

*7) Torque at no load applied to the input shaft at nominal input speed

*8) The maximum radial load that the gearbox can accept

*9) The maximum axial load that the gearbox can accept

*10) The efficiency at the nominal output torque rating

*11) This does not include lost motion

*12) Contact Nidec Drive Technology for the testing conditions and environment

*13) IP65 (wash-down) is available as an option. Contact Nidec Drive Technology for more details

*14) Weight may vary slightly between models

VRS 180 1-Stage Dimensions

Input bore size ≦φ38 mm

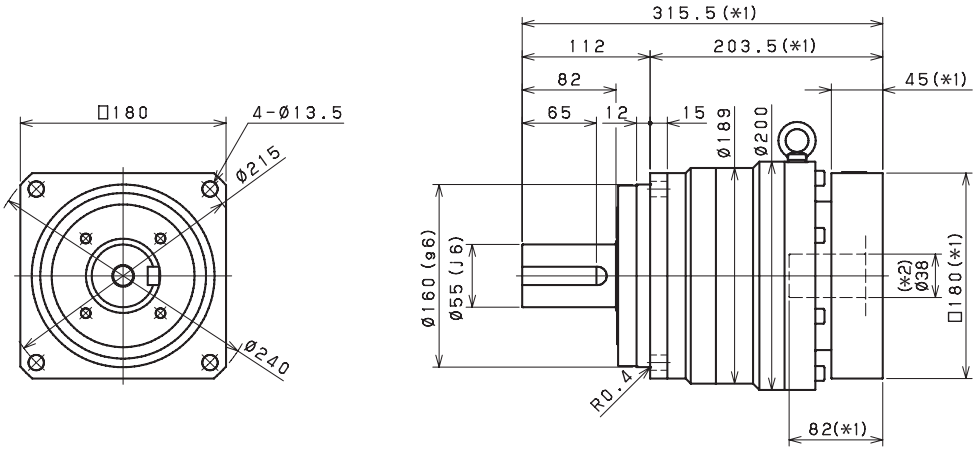

Input bore size ≦φ48 mm

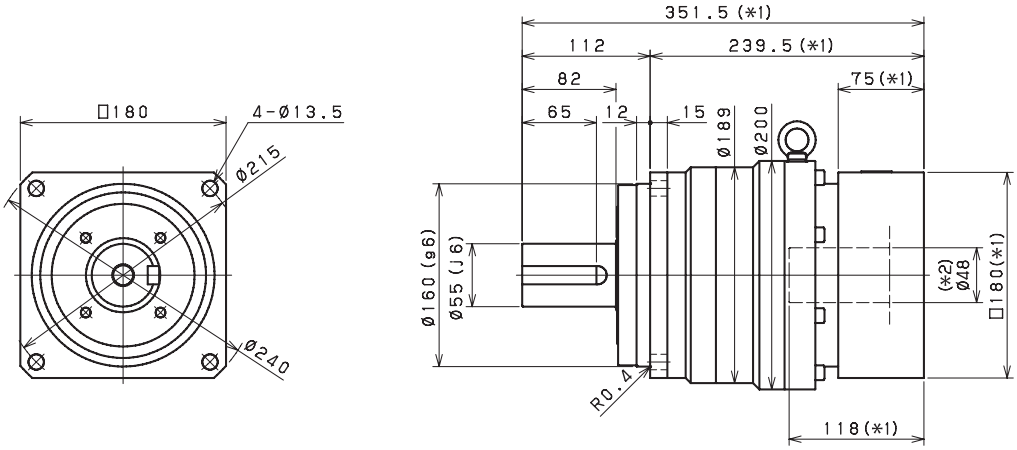

Input bore size ≦φ65 mm

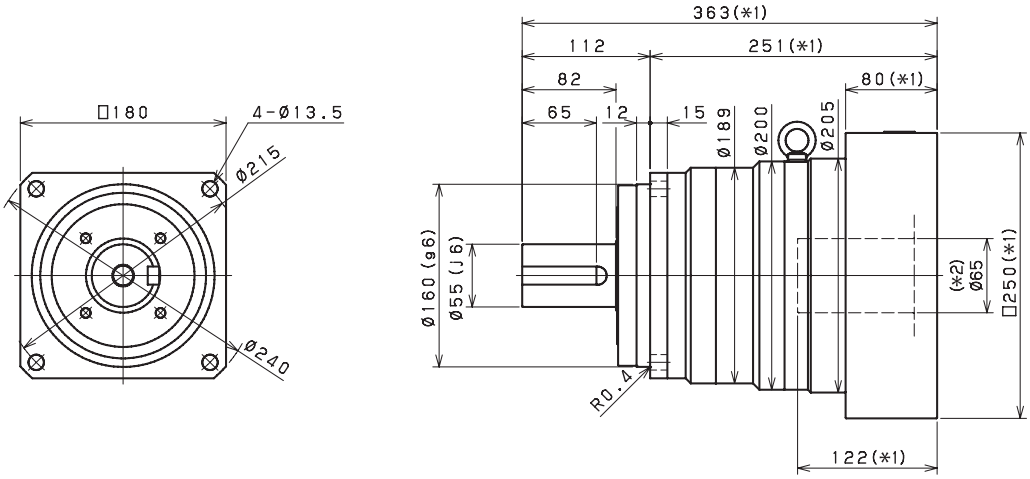

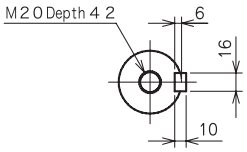

Keyed shaft

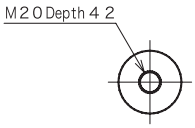

Smooth shaft

*1) Length will vary depending on motor

*2) Bushing will be inserted to adapt to motor shaft

VRS 180 2-Stage Dimensions

Input bore size ≦φ28 mm

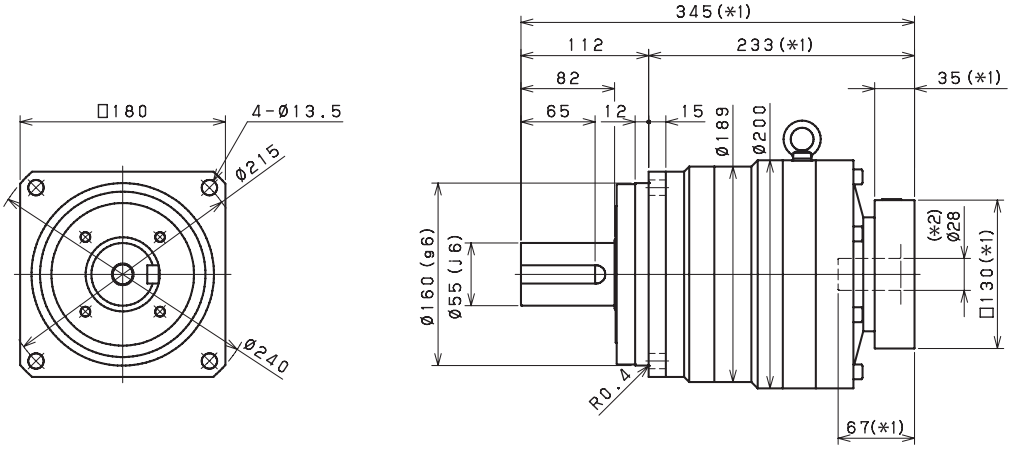

Input bore size ≦φ38 mm

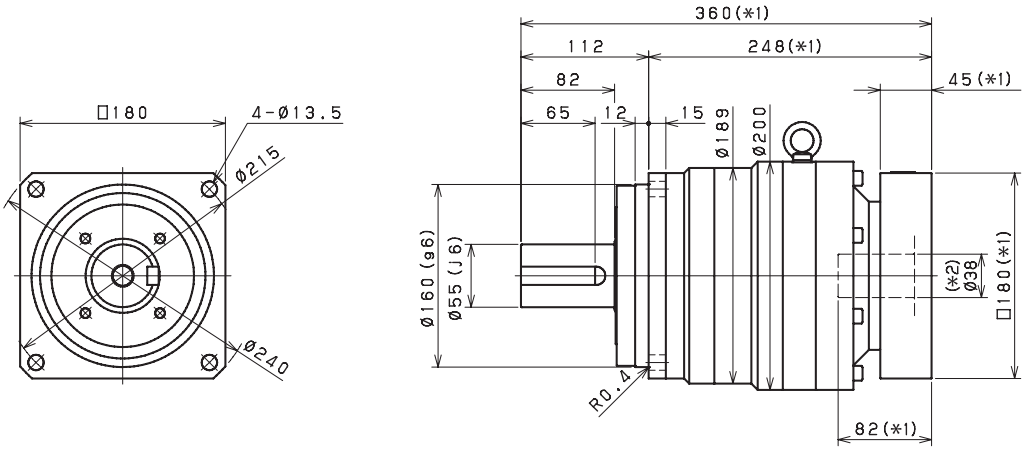

Input bore size ≦φ48 mm

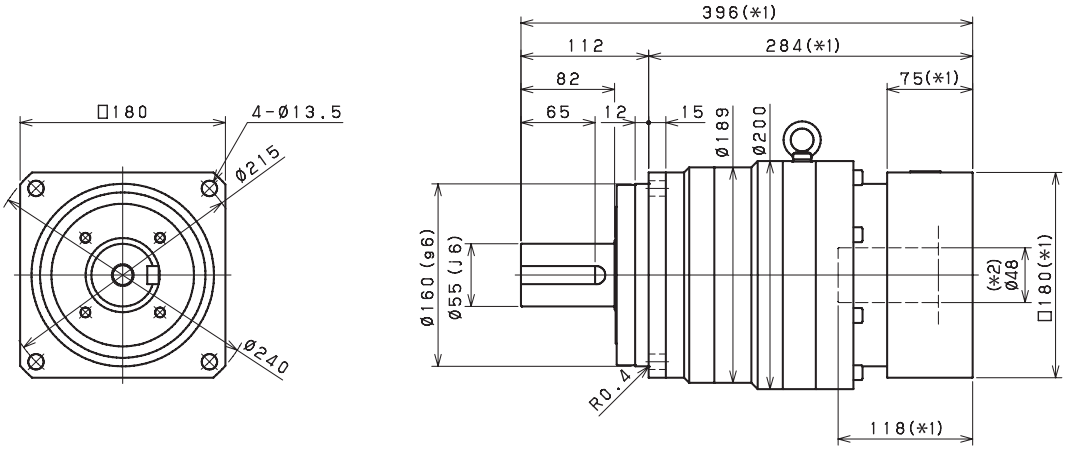

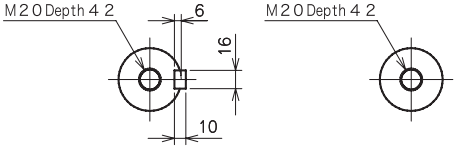

Keyed shaft　　Smooth shaft

*1) Length will vary depending on motor

*2) Bushing will be inserted to adapt to motor shaft

VRS 210 1-Stage Specifications

Frame Size	**210**									
Ratio	Unit	Note	3	4	5	6	7	8	9	10
Nominal Output Torque	[Nm]	*1	980	1400	1400	1600	1700	1700	1700	1700
Maximum Acceleration Torque	[Nm]	*2	2000	2900	2900	2900	2900	2900	2600	2200
Maximum Torque	[Nm]	*3	2400	3700	3700	3500	3500	3400	3000	2700
Emergency Stop Torque	[Nm]	*4	4000	5000	5000	5000	5000	5000	4000	4000
Nominal Input Speed	[rpm]	*5	1200	1200	1500	1500	1700	1700	2000	2000
Maximum Input Speed	[rpm]	*6	3000	3000	3000	3000	3000	3000	3000	3000
No Load Running Torque	[Nm]	*7	2.92							
Maximum Radial Load	[N]	*8	24000							
Maximum Axial Load	[N]	*9	22000							
Moment of Inertia (≤ Ø 28)	[kgcm2]	--	--	--	--	--	--	--	--	--
Moment of Inertia (≤ Ø 38)	[kgcm2]	--	--	--	--	--	--	--	--	--
Moment of Inertia (≤ Ø 48)	[kgcm2]	--	110	55	42	36	33	31	29	28
Moment of Inertia (≤ Ø 65)	[kgcm2]	--	160	99	86	80	77	74	73	72
Efficiency	[%]	*10	95							
Torsional Rigidity	[Nm/arc-min]	*11	400							
Maximum Torsional Backlash	[arc-min]	--	≤ 3							
Noise Level	dB [A]	*12	≤ 61							
Protection Class	--	*13	IP54 (IP65)							
Ambient Temperature	[°C]	--	0-40							
Permitted Housing Temperature	[°C]	--	90							
Weight	[kg]	*14	59							

VRS 210 2-Stage Specifications

Frame Size	**210**									
Ratio	Unit	Note	15	16	20	25	28	30	35	40
Nominal Output Torque	[Nm]	*1	1100	1400	1500	1800	2000	1300	2000	2000
Maximum Acceleration Torque	[Nm]	*2	2000	2900	2900	2900	2900	2000	2900	2900
Maximum Torque	[Nm]	*3	2000	2900	2900	2900	2900	2000	2900	2900
Emergency Stop Torque	[Nm]	*4	4000	5000	5000	5000	5000	4000	5000	5000
Nominal Input Speed	[rpm]	*5	2200	2200	2200	2200	2200	2200	2200	2200
Maximum Input Speed	[rpm]	*6	4500	4500	4500	4500	4500	4500	4500	4500
No Load Running Torque	[Nm]	*7	1.14							
Maximum Radial Load	[N]	*8	24000							
Maximum Axial Load	[N]	*9	22000							
Moment of Inertia (≤ Ø 28)	[kgcm2]	--	--	--	--	--	--	--	--	--
Moment of Inertia (≤ Ø 38)	[kgcm2]	--	20	24	19	18	23	12	18	12
Moment of Inertia (≤ Ø 48)	[kgcm2]	--	34	39	33	33	38	26	32	26
Moment of Inertia (≤ Ø 65)	[kgcm2]	--	--	--	--	--	--	--	--	--
Efficiency	[%]	*10	90							
Torsional Rigidity	[Nm/arc-min]	*11	400							
Maximum Torsional Backlash	[arc-min]	--	≤ 3							
Noise Level	dB [A]	*12	≤ 61							
Protection Class	--	*13	IP54 (IP65)							
Ambient Temperature	[°C]	--	0-40							
Permitted Housing Temperature	[°C]	--	90							
Weight	[kg]	*14	60							

VRS 210 2-Stage Specifications

Frame Size	**210**								
Ratio	Unit	Note	45	50	60	70	80	90	100
Nominal Output Torque	[Nm]	*1	1300	2000	2000	2000	2000	1300	1300
Maximum Acceleration Torque	[Nm]	*2	1800	2900	2900	2900	2500	1800	1600
Maximum Torque	[Nm]	*3	1800	2900	2900	2900	2500	1800	1600
Emergency Stop Torque	[Nm]	*4	4000	5000	5000	5000	5000	4000	4000
Nominal Input Speed	[rpm]	*5	2200	2500	2500	3000	3000	3000	3000
Maximum Input Speed	[rpm]	*6	4500	4500	4500	4500	4500	4500	4500
No Load Running Torque	[Nm]	*7	1.14						
Maximum Radial Load	[N]	*8	24000						
Maximum Axial Load	[N]	*9	22000						
Moment of Inertia (≤ Ø 28)	[kgcm2]	--	--	4.7	4.7	4.6	4.6	4.6	4.6
Moment of Inertia (≤ Ø 38)	[kgcm2]	--	18	12	11	11	11	11	11
Moment of Inertia (≤ Ø 48)	[kgcm2]	--	32	26	26	26	26	26	26
Moment of Inertia (≤ Ø 65)	[kgcm2]	--	--	--	--	--	--	--	--
Efficiency	[%]	*10	90						
Torsional Rigidity	[Nm/arc-min]	*11	400						
Maximum Torsional Backlash	[arc-min]	--	≤ 3						
Noise Level	dB [A]	*12	≤ 61						
Protection Class	--	*13	IP54 (IP65)						
Ambient Temperature	[°C]	--	0-40						
Permitted Housing Temperature	[°C]	--	90						
Weight	[kg]	*14	60						

*1) At nominal input speed, service life is 20,000 hours

*2) The maximum torque when starting or stopping operation. Apply Cycle Factor $\mathbf{f_0}$, found on page 468, for higher duty cycle applications

*3) Permitted 10,000 times during service life. Based on 10% of maximum radial load and smooth output shaft

*4) The maximum torque allowed under a stress situation. Permitted 1,000 times during service life

*5) The average input speed at nominal input torque. Maintain housing temperature below permitted value

*6) The maximum intermittent input speed

*7) Torque at no load applied to the input shaft at nominal input speed

*8) The maximum radial load that the gearbox can accept

*9) The maximum axial load that the gearbox can accept

*10) The efficiency at the nominal output torque rating

*11) This does not include lost motion

*12) Contact Nidec Drive Technology for the testing conditions and environment

*13) IP65 (wash-down) is available as an option. Contact Nidec Drive Technology for more details

*14) Weight may vary slightly between models

VRS 210 1-Stage Dimensions

Input bore size ≦φ48 mm

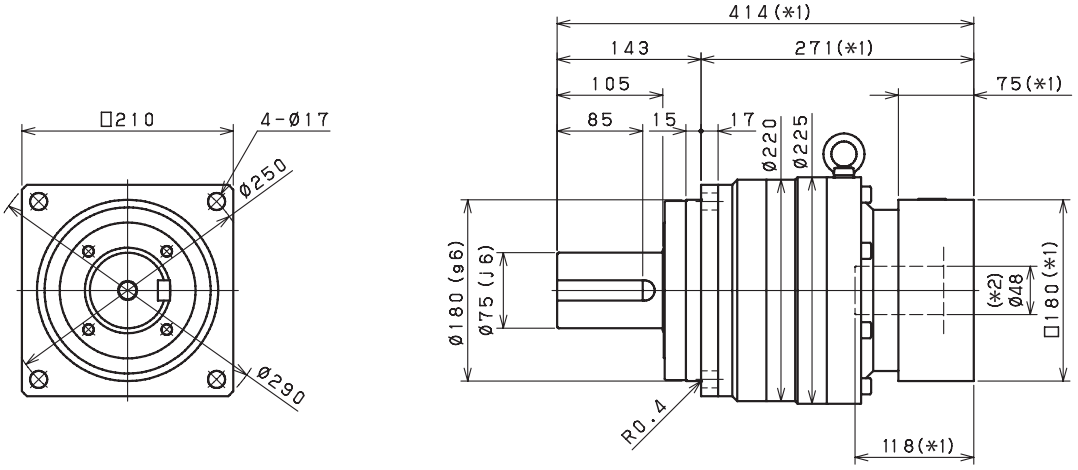

Input bore size ≦φ65 mm

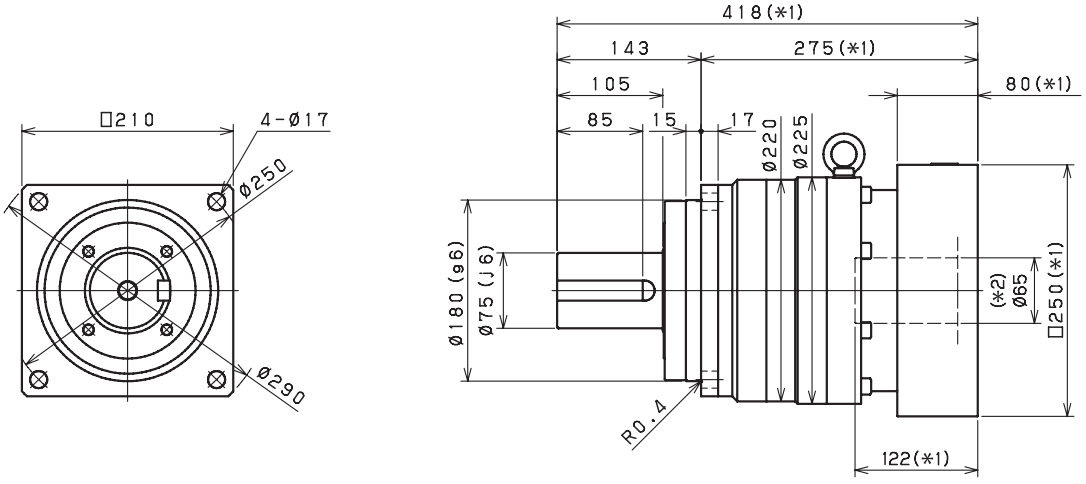

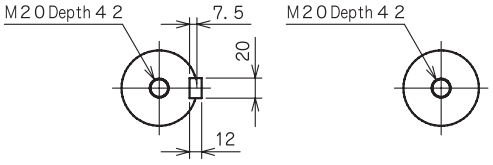

Keyed shaft　　Smooth shaft

*1) Length will vary depending on motor.

*2) Bushing will be inserted to adapt to motor shaft

VRS 210 2-Stage Dimensions

Input bore size ≦φ38 mm

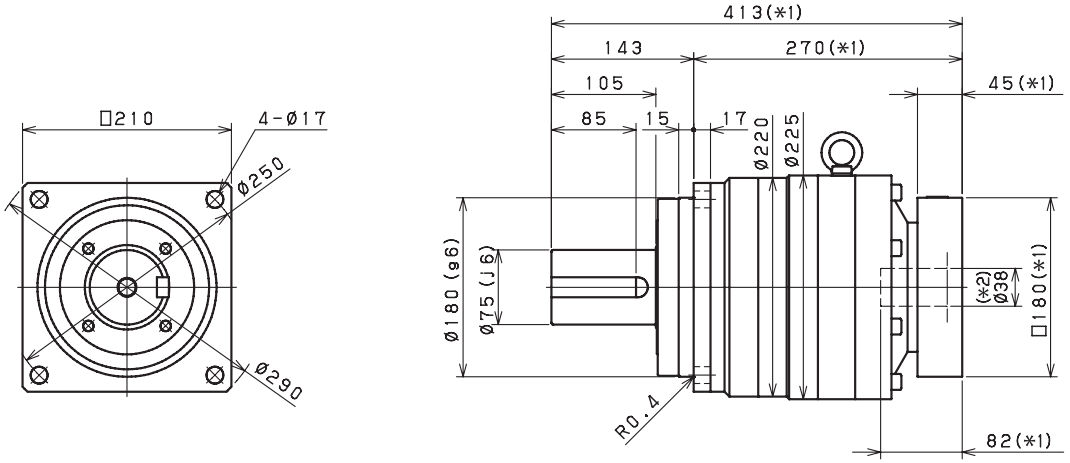

Input bore size ≦φ48 mm

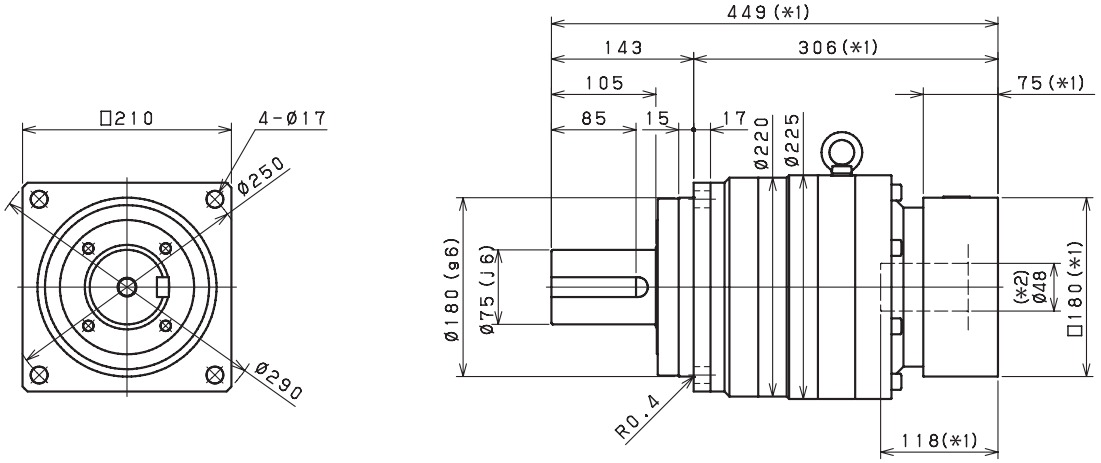

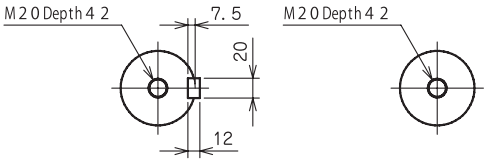

Keyed shaft

Smooth shaft

*1) Length will vary depending on motor.

*2) Bushing will be inserted to adapt to motor shaft

VRS 240 1-Stage Specifications

Frame Size	**240**									
Ratio	Unit	Note	3	4	5	6	7	8	9	10
Nominal Output Torque	[Nm]	*1	1600	2400	2400	2600	2700	2700	2700	2700
Maximum Acceleration Torque	[Nm]	*2	3300	5100	5100	4800	4800	4700	4200	3600
Maximum Torque	[Nm]	*3	3800	5700	5700	5400	5400	5300	4700	4100
Emergency Stop Torque	[Nm]	*4	6000	8000	8000	8000	8000	8000	6000	6000
Nominal Input Speed	[rpm]	*5	1000	1000	1200	1200	1500	1500	1700	1700
Maximum Input Speed	[rpm]	*6	3000	3000	3000	3000	3000	3000	3000	3000
No Load Running Torque	[Nm]	*7	5.96							
Maximum Radial Load	[N]	*8	30000							
Maximum Axial Load	[N]	*9	27000							
Moment of Inertia (≤ Ø 38)	[kgcm2]	--	--	--	--	--	--	--	--	--
Moment of Inertia (≤ Ø 48)	[kgcm2]	--	--	--	--	--	--	--	--	--
Moment of Inertia (≤ Ø 65)	[kgcm2]	--	230	130	110	92	86	81	78	77
Efficiency	[%]	*10	95							
Torsional Rigidity	[Nm/arc-min]	*11	550							
Maximum Torsional Backlash	[arc-min]	--	≤ 3							
Noise Level	dB [A]	*12	≤ 62							
Protection Class	--	*13	IP54 (IP65)							
Ambient Temperature	[°C]	--	0-40							
Permitted Housing Temperature	[°C]	--	90							
Weight	[kg]	*14	85							

VRS 240 2-Stage Specifications

Frame Size	**240**									
Ratio	Unit	Note	15	16	20	25	28	30	35	40
Nominal Output Torque	[Nm]	*1	2000	2400	2600	3200	3400	2000	3400	3400
Maximum Acceleration Torque	[Nm]	*2	3300	5100	5100	5100	4900	3300	4900	5100
Maximum Torque	[Nm]	*3	3300	5100	5100	5100	4900	3300	4900	5100
Emergency Stop Torque	[Nm]	*4	6000	8000	8000	8000	8000	6000	8000	8000
Nominal Input Speed	[rpm]	*5	2000	2000	2000	2000	2000	2000	2000	2000
Maximum Input Speed	[rpm]	*6	4500	4500	4500	4500	4500	4500	4500	4500
No Load Running Torque	[Nm]	*7	1.28							
Maximum Radial Load	[N]	*8	30000							
Maximum Axial Load	[N]	*9	27000							
Moment of Inertia (≤ Ø 38)	[kgcm2]	--	--	--	--	--	--	--	--	--
Moment of Inertia (≤ Ø 48)	[kgcm2]	--	47	55	45	44	52	32	43	31
Moment of Inertia (≤ Ø 65)	[kgcm2]	--	--	--	--	--	--	--	--	--
Efficiency	[%]	*10	90							
Torsional Rigidity	[Nm/arc-min]	*11	550							
Maximum Torsional Backlash	[arc-min]	--	≤ 3							
Noise Level	dB [A]	*12	≤ 62							
Protection Class	--	*13	IP54 (IP65)							
Ambient Temperature	[°C]	--	0-40							
Permitted Housing Temperature	[°C]	--	90							
Weight	[kg]	*14	89							

VRS 240 2-Stage Specifications

Frame Size	**240**								
Ratio	Unit	Note	45	50	60	70	80	90	100
Nominal Output Torque	[Nm]	*1	2000	3400	3400	3400	3400	2000	2000
Maximum Acceleration Torque	[Nm]	*2	2900	5100	4800	4900	3700	2900	2500
Maximum Torque	[Nm]	*3	2900	5100	4800	4900	3700	2900	2500
Emergency Stop Torque	[Nm]	*4	6000	8000	8000	8000	8000	6000	6000
Nominal Input Speed	[rpm]	*5	2000	2200	2200	2800	2800	2800	2800
Maximum Input Speed	[rpm]	*6	4500	4500	4500	4500	4500	4500	4500
No Load Running Torque	[Nm]	*7	1.28						
Maximum Radial Load	[N]	*8	30000						
Maximum Axial Load	[N]	*9	27000						
Moment of Inertia (≤ Ø 38)	[kgcm2]	--	--	14	13	13	13	13	13
Moment of Inertia (≤ Ø 48)	[kgcm2]	--	43	31	31	31	31	31	31
Moment of Inertia (≤ Ø 65)	[kgcm2]	--	--	--	--	--	--	--	--
Efficiency	[%]	*10	90						
Torsional Rigidity	[Nm/arc-min]	*11	550						
Maximum Torsional Backlash	[arc-min]	--	≤ 3						
Noise Level	dB [A]	*12	≤ 62						
Protection Class	--	*13	IP54 (IP65)						
Ambient Temperature	[°C]	--	0-40						
Permitted Housing Temperature	[°C]	--	90						
Weight	[kg]	*14	89						

*1) At nominal input speed, service life is 20,000 hours

*2) The maximum torque when starting or stopping operation. Apply Cycle Factor f_0, found on page 468, for higher duty cycle applications

*3) Permitted 10,000 times during service life. Based on 10% of maximum radial load and smooth output shaft

*4) The maximum torque allowed under a stress situation. Permitted 1,000 times during service life

*5) The average input speed at nominal input torque. Maintain housing temperature below permitted value

*6) The maximum intermittent input speed

*7) Torque at no load applied to the input shaft at nominal input speed

*8) The maximum radial load that the gearbox can accept

*9) The maximum axial load that the gearbox can accept

*10) The efficiency at the nominal output torque rating

*11) This does not include lost motion

*12) Contact Nidec Drive Technology for the testing conditions and environment

*13) IP65 (wash-down) is available as an option. Contact Nidec Drive Technology for more details

*14) Weight may vary slightly between models

VRS 240 1-Stage Dimensions

Input bore size ≦φ65 mm

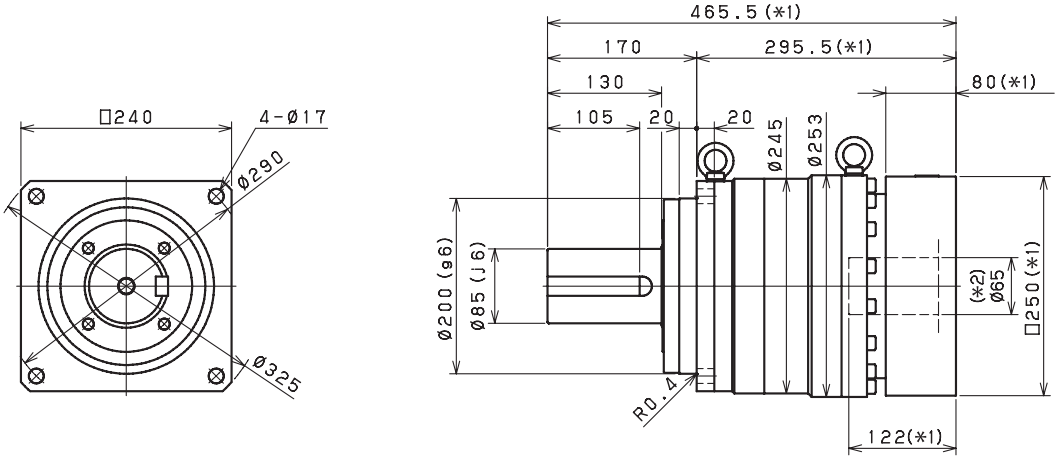

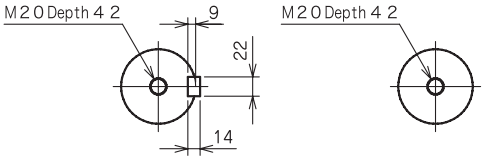

Keyed shaft

Smooth shaft

*1) Length will vary depending on motor

*2) Bushing will be inserted to adapt to motor shaft

VRS 240 2-Stage Dimensions

Input bore size ≦φ48 mm

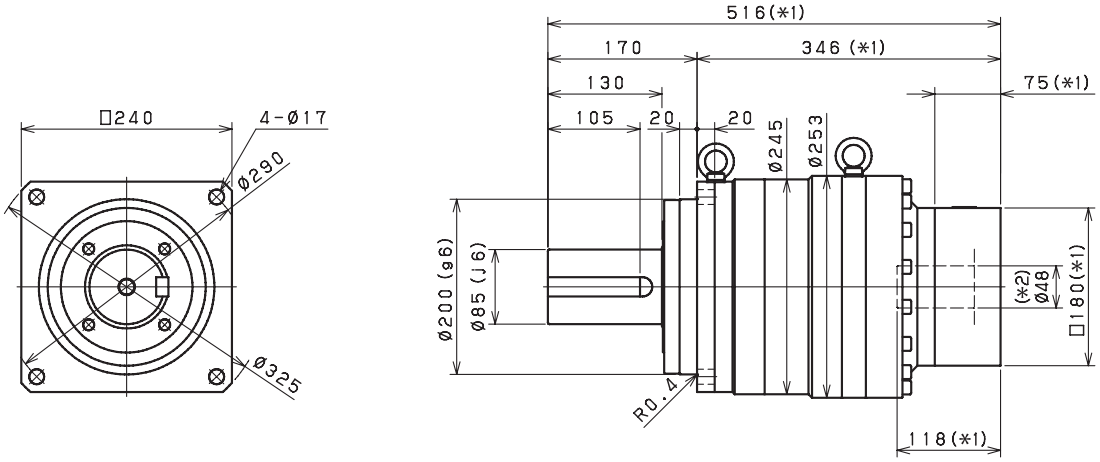

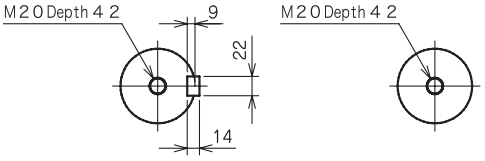

Keyed shaft

Smooth shaft

*1) Length will vary depending on motor

*2) Bushing will be inserted to adapt to motor shaft

VRT SERIES

The VRT series sets the new standard in applications requiring extremely high torque density and rigidity. Its compact design and robotic industry ISO flange is ideal for equipment requiring high speed, high precision indexing movement and streamlined installation. The remarkable torsional stiffness and ultra low backlash combine to provide outstanding positioning accuracy.

This product comes standard with <3 arc-min backlash, but is also available with reduced options down to <1 arc-min. The VRT is the most robust planetary solution in the marketplace and is used across a numerous range of applications including 7th axis robot shuttles, dial tables, end of arm tooling and any other axis where installation space, reduced assembly time and torque density play an important role.

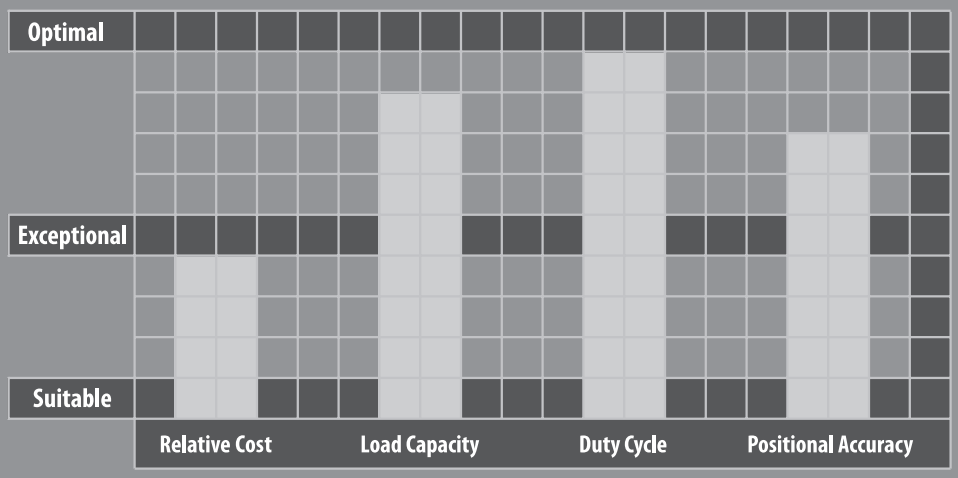

VRT SERIES

- The most compact and robust option for machine builders. Tapered roller bearings allow for high radial and axial loading
- ISO robotic mounting interface for superior flexibility and direct mounting of pinions, pulleys and turntables
- Exceptional torsional rigidity for high positional accuracy needs
- Best-In-class standard backlash (≤3 arc-min) with reduced backlash options available
- Broad range of mounting adapters offer a simple, precise attachment to any motor
- Maintenance-free solution that is lubricated for life. High performance grease allows flexible mounting in any orientation

VRT Series Features

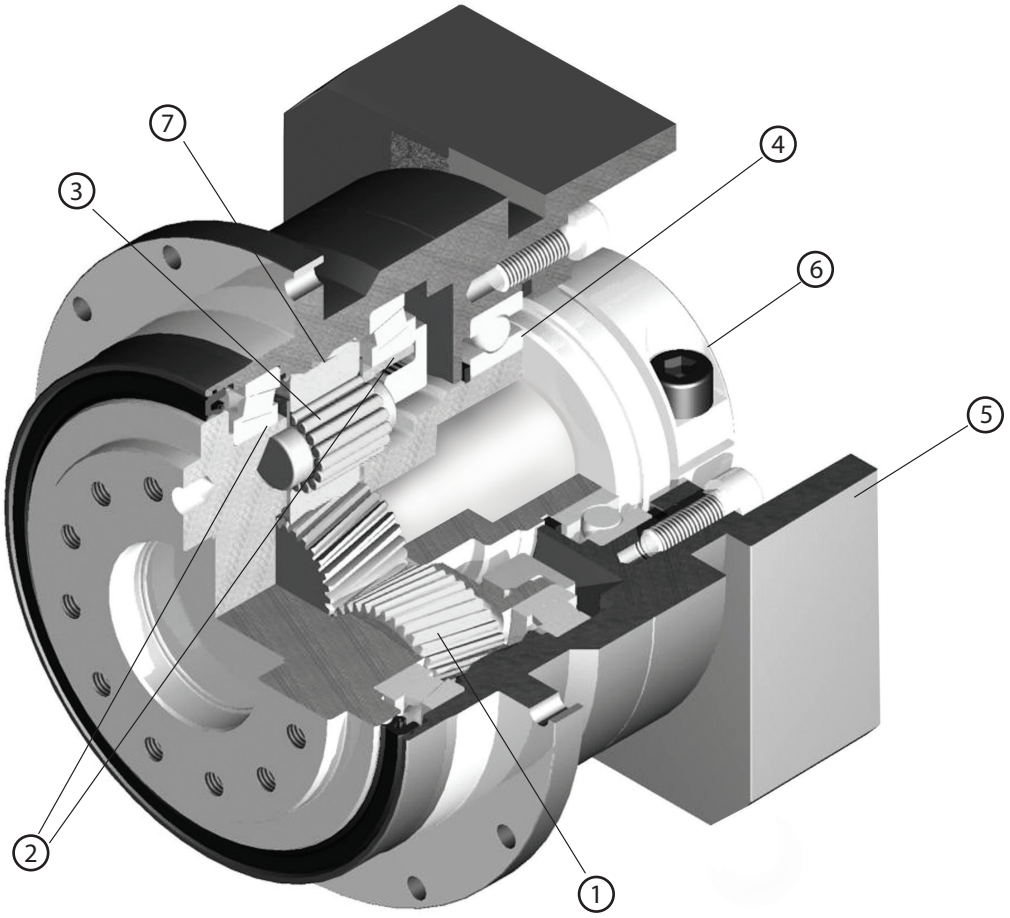

1. Carburized helical gears with proprietary secondary finishing process for higher accuracy and smooth, quiet operation
2. One piece output shaft and planet carrier with two robust tapered bearings straddling the planet gears. Higher radial/axial load capacity, stiffness, torque density and safety factor, with guaranteed alignment of gearing
3. Uncaged needle roller bearings provide excellent torque density and torsional rigidity
4. Unique labyrinth input seal design greatly reduces heat and increases system efficiency. IP65 protection is available for wash down applications
5. Optimized mounting system with active centering on motor pilot diameter guarantees alignment of motor. Motor can be installed in any orientation
6. True concentric motor shaft clamping connection, optimized for your specific motor. Reduced inertia for dynamic performance and balanced for high speed operation
7. Ring gear machined directly into the housing, not welded or pressed in. Provides greater concentricity and elimination of speed fluctuation

VRT Series Model Code

VRT – 110 C – 7 – F 3 – 19HB16

- **19HB16** — Motor mounting code (*1)
- **3** — Standard Backlash: ≤ 3 arc-min; Reduced Backlash: ≤1 arc-min (*2)
- **F** — Output mounting style: F: Flange
- **7** — Ratio: 1-Stage: 4, 5, 7, 10; 2-Stage: 16, 20, 25, 28, 35, 40, 50, 70, 100
- **C** — Design version
- **110** — Frame size: 047, 064, 090, 110, 140, 200, 255, 285
- **VRT** — Series

*1) Motor mounting code varies depending on the motor. Use the selection tool link below to configure the code.
*2) Sizes 090/110/140/200 Only

Contact us for additional information or refer to our online gearbox selection tool.

Selection tool https://www.nidec-drivetechnology.co.jp/selection/all/

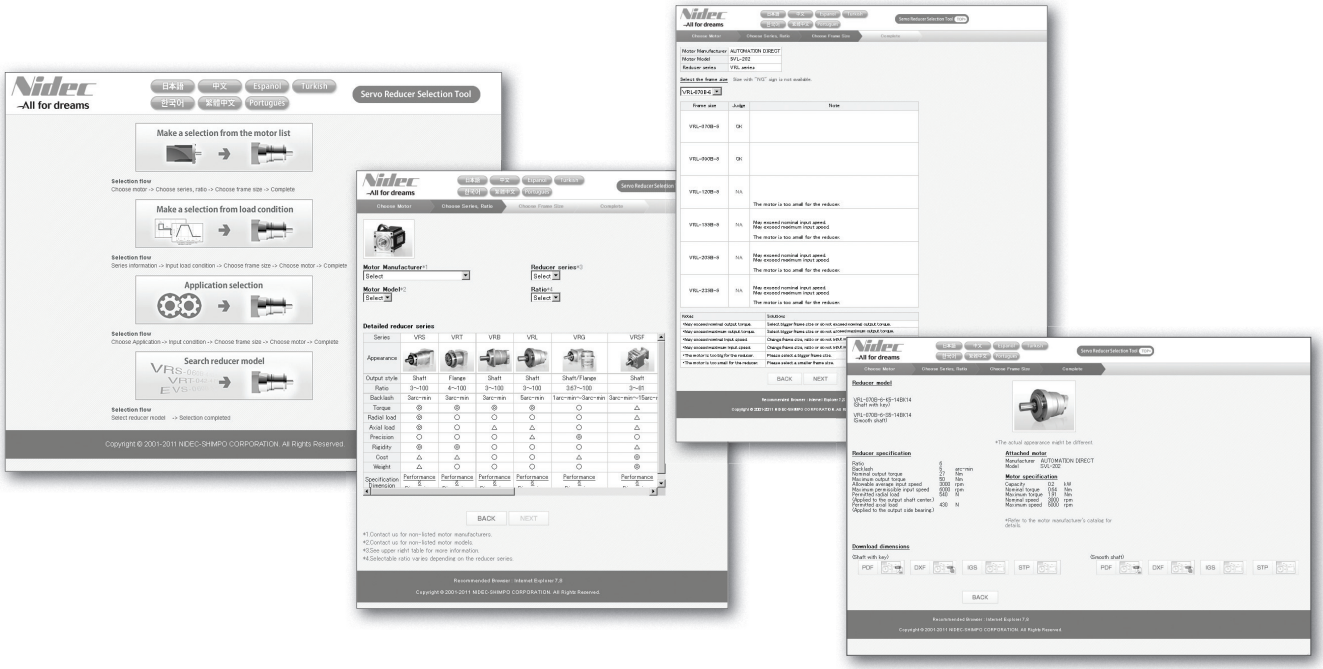

VRT 047 1-Stage Specifications

Frame Size	**047**								
Ratio	Unit	Notes	4	5	6	7	8	9	10
Nominal Output Torque	[Nm]	*1	9	10	10	10	10	10	10
Maximum Acceleration Torque	[Nm]	*2	21	21	21	21	21	14	14
Maximum Torque	[Nm]	*3	25	25	25	25	25	17	17
Emergency Stop Torque	[Nm]	*4	35	35	35	35	35	30	30
Nominal Input Speed	[rpm]	*5	4000	4000	4000	4000	4000	4000	4000
Maximum Input Speed	[rpm]	*6	8000	8000	8000	8000	8000	8000	8000
No Load Running Torque	[Nm]	*7	0.03						
Maximum Radial Load	[N]	*8	1100						
Maximum Axial Load	[N]	*9	550						
Maximum Tilting Moment	[Nm]	*10	32						
Moment of Inertia (≤ Ø 8)	[kgcm2]	--	0.052	0.043	0.038	0.036	0.034	0.033	0.032
Moment of Inertia (≤ Ø 14)	[kgcm2]	--	0.17	0.16	0.15	0.15	0.15	0.15	0.15
Efficiency	[%]	*11	95						
Torsional Rigidity	[Nm/arc-min]	*12	2						
Maximum Torsional Backlash	[arc-min]	--	≤ 3						
Noise Level	dB [A]	*13	≤ 61						
Protection Class	--	*14	IP54 (IP65)						
Ambient Temperature	[°C]	--	0 - 40						
Permitted Housing Temperature	[°C]	--	90						
Weight	[kg]	*15	0.7						

VRT 047 2-Stage Specifications

Frame Size	**047**								
Ratio	Unit	Notes	16	20	25	28	35	40	45
Nominal Output Torque	[Nm]	*1	14	14	15	15	15	15	11
Maximum Acceleration Torque	[Nm]	*2	21	21	21	21	21	21	14
Maximum Torque	[Nm]	*3	21	21	21	21	21	21	14
Emergency Stop Torque	[Nm]	*4	35	35	35	35	35	35	30
Nominal Input Speed	[rpm]	*5	4000	4000	4000	4000	4000	4000	4000
Maximum Input Speed	[rpm]	*6	8500	8500	8500	8500	8500	8500	8500
No Load Running Torque	[Nm]	*7	0.01						
Maximum Radial Load	[N]	*8	1100						
Maximum Axial Load	[N]	*9	550						
Maximum Tilting Moment	[Nm]	*10	32						
Moment of Inertia (≤ Ø 8)	[kgcm2]	--	0.039	0.035	0.034	0.038	0.034	0.030	0.034
Moment of Inertia (≤ Ø 14)	[kgcm2]	--	--	--	--	--	--	--	--
Efficiency	[%]	*11	90						
Torsional Rigidity	[Nm/arc-min]	*12	2						
Maximum Torsional Backlash	[arc-min]	--	≤ 5						
Noise Level	dB [A]	*13	≤ 61						
Protection Class	--	*14	IP54 (IP65)						
Ambient Temperature	[°C]	--	0 - 40						
Permitted Housing Temperature	[°C]	--	90						
Weight	[kg]	*15	0.8						

VRT 047 2-Stage Specifications

Frame Size	**047**							
Ratio	Unit	Notes	50	60	70	80	90	100
Nominal Output Torque	[Nm]	*1	15	15	15	15	11	11
Maximum Acceleration Torque	[Nm]	*2	21	21	21	21	14	14
Maximum Torque	[Nm]	*3	21	21	21	21	14	14
Emergency Stop Torque	[Nm]	*4	35	35	35	35	30	30
Nominal Input Speed	[rpm]	*5	4000	4000	4000	4000	4000	4000
Maximum Input Speed	[rpm]	*6	8500	8500	8500	8500	8500	8500
No Load Running Torque	[Nm]	*7	0.01					
Maximum Radial Load	[N]	*8	1100					
Maximum Axial Load	[N]	*9	550					
Maximum Tilting Moment	[Nm]	*10	32					
Moment of Inertia (≤ Ø 8)	[kgcm2]	--	0.030	0.030	0.030	0.030	0.030	0.030
Moment of Inertia (≤ Ø 14)	[kgcm2]	--	--	--	--	--	--	--
Efficiency	[%]	*11	90					
Torsional Rigidity	[Nm/arc-min]	*12	2					
Maximum Torsional Backlash	[arc-min]	--	≤ 5					
Noise Level	dB [A]	*13	≤ 61					
Protection Class	--	*14	IP54 (IP65)					
Ambient Temperature	[°C]	--	0 - 40					
Permitted Housing Temperature	[°C]	--	90					
Weight	[kg]	*15	0.8					

*1) At nominal input speed, service life is 20,000 hours

*2) The maximum torque when starting or stopping operation. Apply Cycle Factor f_0, found on page 468, for higher duty cycle applications

*3) Permitted 10,000 times during service life. Based on 10% of maximum radial load and smooth output shaft

*4) The maximum torque allowed under a stress situation. Permitted 1,000 times during service life

*5) The average input speed at nominal input torque. Maintain housing temperature below permitted value

*6) The maximum intermittent input speed

*7) Torque at no load applied to the input shaft at nominal input speed

*8) The maximum radial load that the gearbox can accept

*9) The maximum axial load that the gearbox can accept

*10) The maximum load at output flange surface

*11) The efficiency at the nominal output torque rating

*12) This does not include lost motion

*13) Contact Nidec Drive Technology for the testing conditions and environment

*14) IP65 (wash-down) is available as an option. Contact Nidec Drive Technology for more details

*15) Weight may vary slightly between models

VRT 047 1-Stage Dimensions

Input bore size ≦φ8 mm

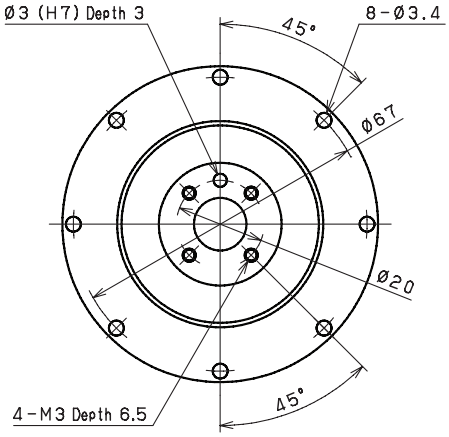

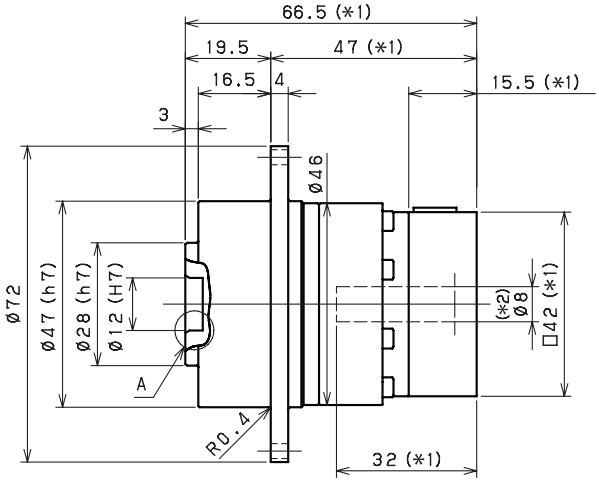

Input bore size ≦φ14 mm

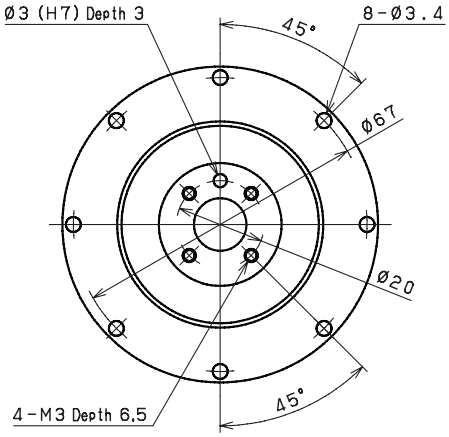

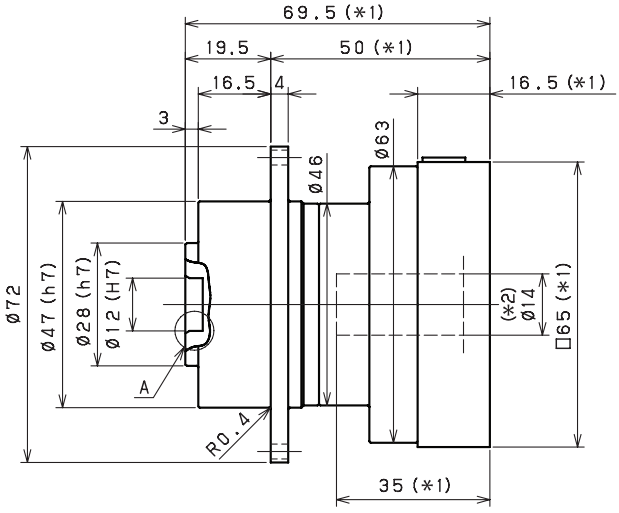

*1) Length will vary depending on motor

*2) Bushing will be inserted to adapt to motor shaft

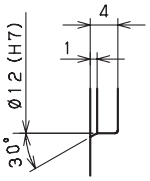

Enlarged detail A

VRT 047 2-Stage Dimensions

Input bore size ≦φ8 mm

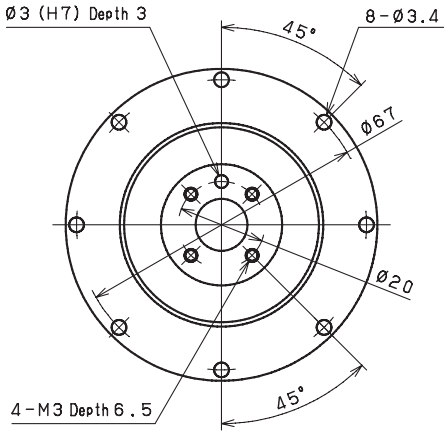

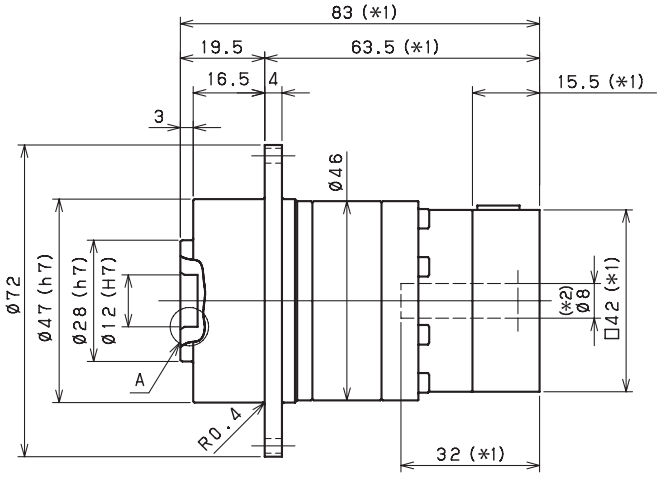

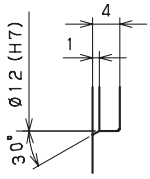

Enlarged detail A

*1) Length will vary depending on motor

*2) Bushing will be inserted to adapt to motor shaft

VRT

VRT 064 1-Stage Specifications

Frame Size	**064**								
Ratio	Unit	Note	4	5	6	7	8	9	10
Nominal Output Torque	[Nm]	*1	27	28	28	28	28	28	28
Maximum Acceleration Torque	[Nm]	*2	66	66	66	66	66	46	46
Maximum Torque	[Nm]	*3	79	79	79	79	76	55	55
Emergency Stop Torque	[Nm]	*4	100	100	100	100	100	80	80
Nominal Input Speed	[rpm]	*5	3300	4000	4000	4000	4000	4000	4000
Maximum Input Speed	[rpm]	*6	7500	7500	7500	7500	7500	7500	7500
No Load Running Torque	[Nm]	*7	0.08						
Maximum Radial Load	[N]	*8	1500						
Maximum Axial Load	[N]	*9	750						
Maximum Tilting Moment	[Nm]	*10	58						
Moment of Inertia (≤ Ø 8)	[kgcm2]	-	0.13	0.10	0.085	0.075	0.068	0.064	0.062
Moment of Inertia (≤ Ø 14)	[kgcm2]	--	0.24	0.21	0.20	0.19	0.18	0.18	0.17
Moment of Inertia (≤ Ø 19)	[kgcm2]	--	0.52	0.49	0.47	0.46	0.46	0.45	0.45
Efficiency	[%]	*11	95						
Torsional Rigidity	[Nm/arc-min]	*12	12	12	11	11	8	8	8
Maximum Torsional Backlash	[arc-min]	--	≤ 3						
Noise Level	dB [A]	*13	≤ 66						
Protection Class	--	*14	IP54 (IP65)						
Ambient Temperature	[°C]	--	0 - 40						
Permitted Housing Temperature	[°C]	--	90						
Weight	[kg]	*15	1.4						

VRT 064 2-Stage Specifications

Frame Size	**064**								
Ratio	Unit	Note	16	20	25	28	35	40	45
Nominal Output Torque	[Nm]	*1	32	32	43	45	45	45	32
Maximum Acceleration Torque	[Nm]	*2	66	66	66	66	66	66	46
Maximum Torque	[Nm]	*3	66	66	66	66	66	66	46
Emergency Stop Torque	[Nm]	*4	100	100	100	100	100	100	80
Nominal Input Speed	[rpm]	*5	4000	4000	4000	4000	4000	4000	4000
Maximum Input Speed	[rpm]	*6	8500	8500	8500	8500	8500	8500	8500
No Load Running Torque	[Nm]	*7	0.04						
Maximum Radial Load	[N]	*8	1500						
Maximum Axial Load	[N]	*9	750						
Maximum Tilting Moment	[Nm]	*10	58						
Moment of Inertia (≤ Ø 8)	[kgcm2]	-	0.072	0.064	0.062	0.069	0.061	0.051	0.061
Moment of Inertia (≤ Ø 14)	[kgcm2]	--	0.18	0.18	0.17	0.18	0.17	0.16	0.17
Moment of Inertia (≤ Ø 19)	[kgcm2]	--	0.46	0.45	0.45	0.46	0.45	0.44	0.45
Efficiency	[%]	*11	90						
Torsional Rigidity	[Nm/arc-min]	*12	12	12	12	12	12	11	11
Maximum Torsional Backlash	[arc-min]	--	≤ 3						
Noise Level	dB [A]	*13	≤ 66						
Protection Class	--	*14	IP54 (IP65)						
Ambient Temperature	[°C]	--	0 - 40						
Permitted Housing Temperature	[°C]	--	90						
Weight	[kg]	*15	1.6						

VRT 064 2-Stage Specifications

Frame Size	**064**							
Ratio	Unit	Note	50	60	70	80	90	100
Nominal Output Torque	[Nm]	*1	45	45	45	45	32	32
Maximum Acceleration Torque	[Nm]	*2	66	66	66	66	46	46
Maximum Torque	[Nm]	*3	66	66	66	66	46	46
Emergency Stop Torque	[Nm]	*4	100	100	100	100	80	80
Nominal Input Speed	[rpm]	*5	4800	4800	5500	5500	5500	5500
Maximum Input Speed	[rpm]	*6	8500	8500	8500	8500	8500	8500
No Load Running Torque	[Nm]	*7	0.04					
Maximum Radial Load	[N]	*8	1500					
Maximum Axial Load	[N]	*9	750					
Maximum Tilting Moment	[Nm]	*10	58					
Moment of Inertia (≤ Ø 8)	[kgcm2]	-	0.051	0.051	0.051	0.051	0.051	0.051
Moment of Inertia (≤ Ø 14)	[kgcm2]	--	0.16	0.16	0.16	0.16	0.16	0.16
Moment of Inertia (≤ Ø 19)	[kgcm2]	--	0.44	0.44	0.44	0.44	0.44	0.44
Efficiency	[%]	*11	90					
Torsional Rigidity	[Nm/arc-min]	*12	12	9	11	7	7	8
Maximum Torsional Backlash	[arc-min]	--	≤ 3					
Noise Level	dB [A]	*13	≤ 66					
Protection Class	--	*14	IP54 (IP65)					
Ambient Temperature	[°C]	--	0 - 40					
Permitted Housing Temperature	[°C]	--	90					
Weight	[kg]	*15	1.6					

*1) At nominal input speed, service life is 20,000 hours

*2) The maximum torque when starting or stopping operation. Apply Cycle Factor f_0, found on page 468, for higher duty cycle applications

*3) Permitted 10,000 times during service life. Based on 10% of maximum radial load and smooth output shaft

*4) The maximum torque allowed under a stress situation. Permitted 1,000 times during service life

*5) The average input speed at nominal input torque. Maintain housing temperature below permitted value

*6) The maximum intermittent input speed

*7) Torque at no load applied to the input shaft at nominal input speed

*8) The maximum radial load that the gearbox can accept

*9) The maximum axial load that the gearbox can accept

*10) The maximum load at output flange surface

*11) The efficiency at the nominal output torque rating

*12) This does not include lost motion

*13) Contact Nidec Drive Technology for the testing conditions and environment

*14) IP65 (wash-down) is available as an option. Contact Nidec Drive Technology for more details

*15) Weight may vary slightly between models

VRT o64 1-Stage Dimensions

Input bore size ≦φ8 mm

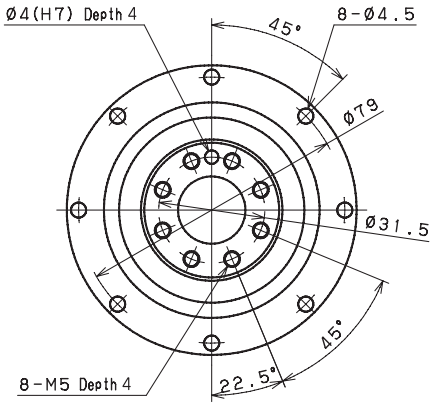

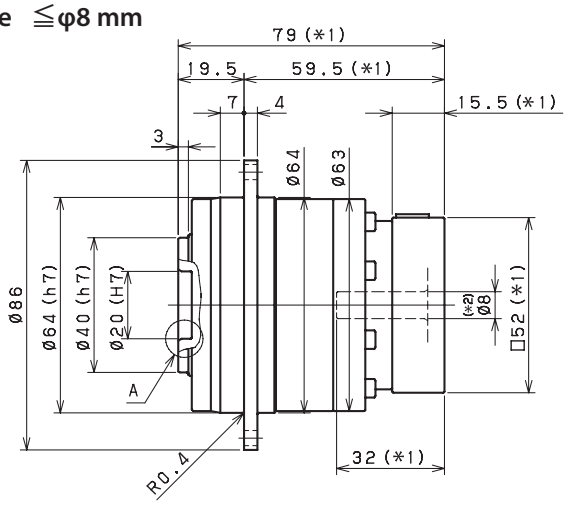

Input bore size ≦φ14 mm

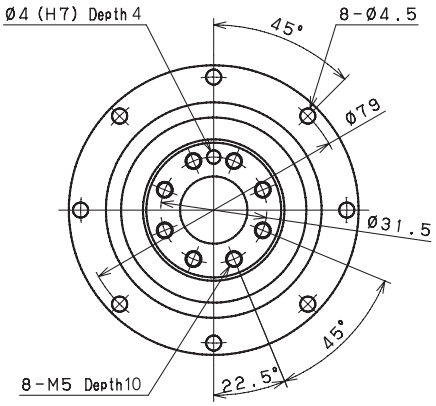

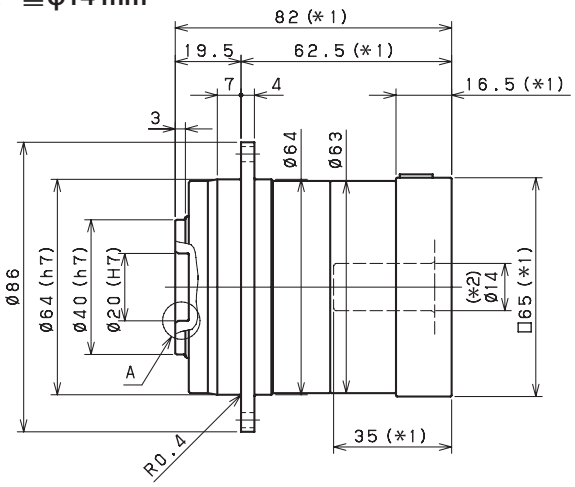

Input bore size ≦φ19 mm

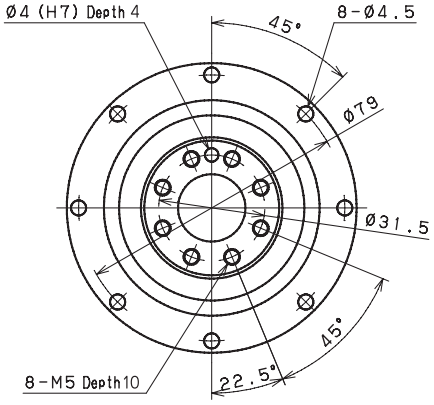

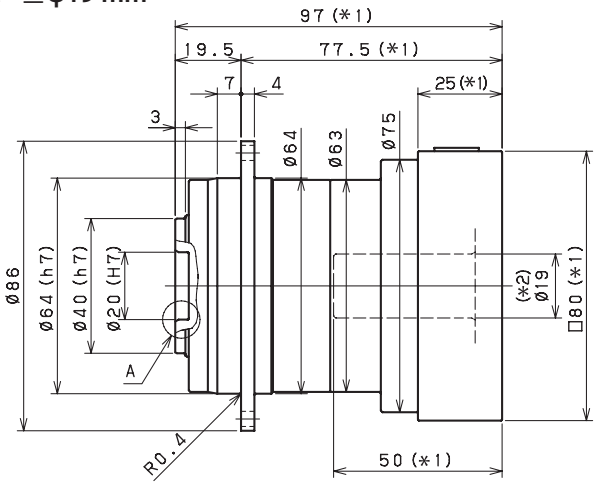

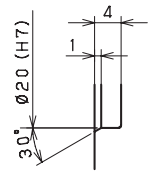

Enlarged detail A

*1) Length will vary depending on motor

*2) Bushing will be inserted to adapt to motor shaft

VRT o64 2-Stage Dimensions

Input bore size ≦φ8 mm

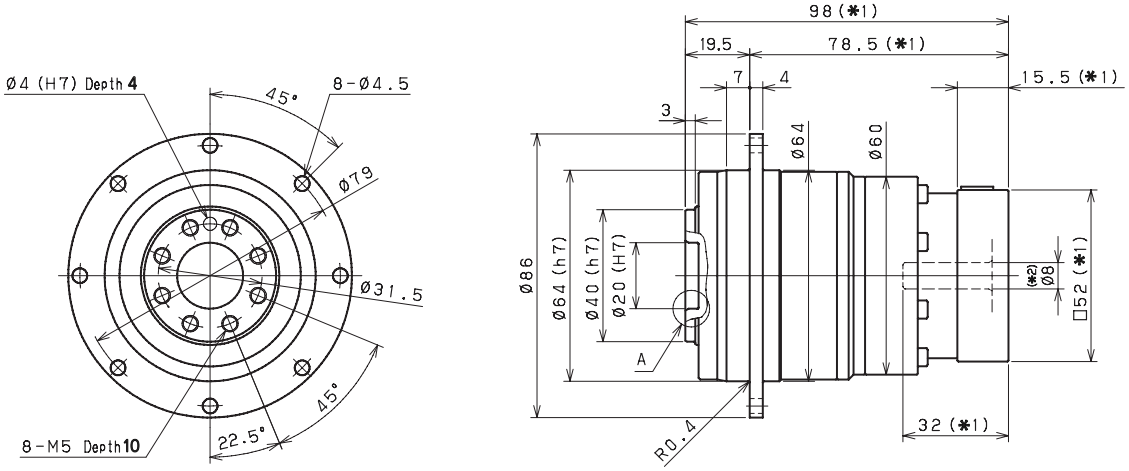

Input bore size ≦φ14 mm

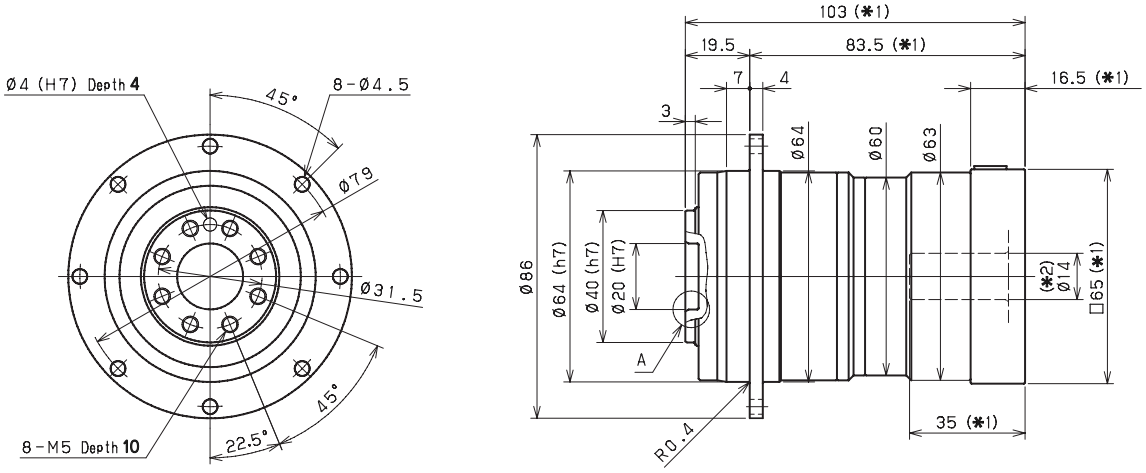

Input bore size ≦φ19 mm

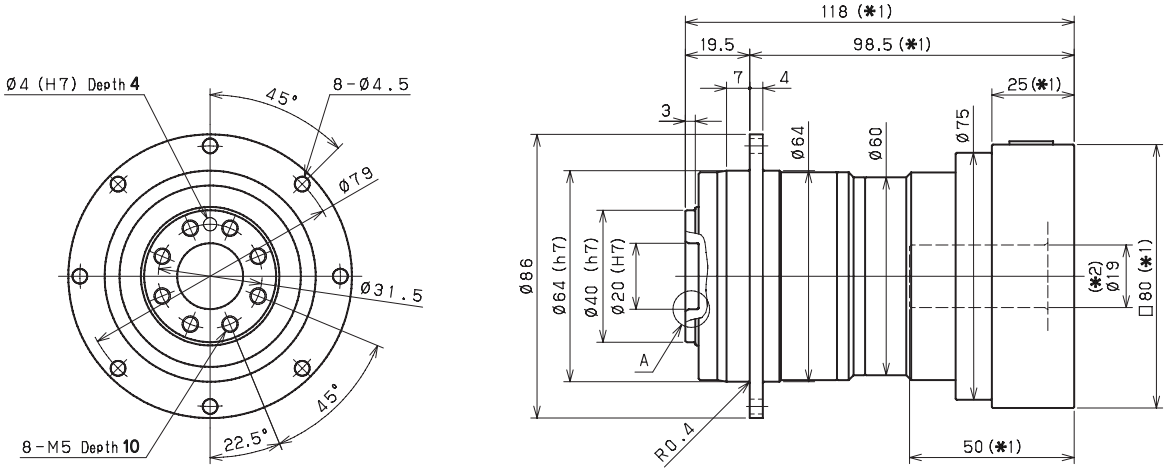

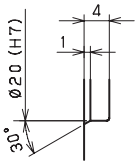

Enlarged detail A

*1) Length will vary depending on motor

*2) Bushing will be inserted to adapt to motor shaft

VRT

VRT 090 1-Stage Specifications

Frame Size			**090**						
Ratio	Unit	Note	4	5	6	7	8	9	10
Nominal Output Torque	[Nm]	*1	77	84	84	84	84	84	84
Maximum Acceleration Torque	[Nm]	*2	165	165	165	165	165	112	112
Maximum Torque	[Nm]	*3	200	200	195	195	190	145	145
Emergency Stop Torque	[Nm]	*4	250	250	250	250	250	200	200
Nominal Input Speed	[rpm]	*5	2900	2900	2900	3100	3100	3100	3100
Maximum Input Speed	[rpm]	*6	7500	7500	7500	7500	7500	7500	7500
No Load Running Torque	[Nm]	*7	0.17						
Maximum Radial Load	[N]	*8	3300						
Maximum Axial Load	[N]	*9	1700						
Maximum Tilting Moment	[Nm]	*10	170						
Moment of Inertia (≤ Ø 8)	[kgcm2]	--	--	--	--	--	--	--	--
Moment of Inertia (≤ Ø 14)	[kgcm2]	--	0.78	0.58	0.48	0.42	0.38	0.36	0.34
Moment of Inertia (≤ Ø 19)	[kgcm2]	--	1.2	0.98	0.87	0.82	0.78	0.75	0.74
Moment of Inertia (≤ Ø 28)	[kgcm2]	--	2.9	2.7	2.6	2.6	2.5	2.5	2.5
Efficiency	[%]	*11	95						
Torsional Rigidity	[Nm/arc-min]	*12	32	33	30	30	23	23	23
Maximum Torsional Backlash	[arc-min]	--	Standard ≤ 3 / Reduced ≤ 1						
Noise Level	dB [A]	*13	≤ 67						
Protection Class	--	*14	IP54 (IP65)						
Ambient Temperature	[°C]	--	0 - 40						
Permitted Housing Temperature	[°C]	--	90						
Weight	[kg]	*15	3.6						

VRT 090 2-Stage Specifications

Frame Size			**090**						
Ratio	Unit	Note	16	20	25	28	35	40	45
Nominal Output Torque	[Nm]	*1	80	86	106	118	118	118	88
Maximum Acceleration Torque	[Nm]	*2	165	165	165	165	165	165	112
Maximum Torque	[Nm]	*3	165	165	165	165	165	165	112
Emergency Stop Torque	[Nm]	*4	250	250	250	250	250	250	200
Nominal Input Speed	[rpm]	*5	3500	3500	3500	3500	3500	3500	3500
Maximum Input Speed	[rpm]	*6	8500	8500	8500	8500	8500	8500	8500
No Load Running Torque	[Nm]	*7	0.05						
Maximum Radial Load	[N]	*8	3300						
Maximum Axial Load	[N]	*9	1700						
Maximum Tilting Moment	[Nm]	*10	170						
Moment of Inertia (≤ Ø 8)	[kgcm2]	--	0.26	0.20	0.19	0.24	0.19	0.12	0.19
Moment of Inertia (≤ Ø 14)	[kgcm2]	--	0.43	0.36	0.36	0.40	0.35	0.28	0.35
Moment of Inertia (≤ Ø 19)	[kgcm2]	--	0.81	0.75	0.74	0.79	0.74	0.67	0.73
Moment of Inertia (≤ Ø 28)	[kgcm2]	--	2.5	2.5	2.5	2.5	2.5	2.4	2.5
Efficiency	[%]	*11	90						
Torsional Rigidity	[Nm/arc-min]	*12	32	32	32	31	32	30	30
Maximum Torsional Backlash	[arc-min]	--	Standard ≤ 3 / Reduced ≤ 1						
Noise Level	dB [A]	*13	≤ 67						
Protection Class	--	*14	IP54 (IP65)						
Ambient Temperature	[°C]	--	0 - 40						
Permitted Housing Temperature	[°C]	--	90						
Weight	[kg]	*15	4						

VRT 090 2-Stage Specifications

Frame Size	090							
Ratio	Unit	Note	50	60	70	80	90	100
Nominal Output Torque	[Nm]	*1	118	118	118	118	88	88
Maximum Acceleration Torque	[Nm]	*2	165	165	165	165	112	112
Maximum Torque	[Nm]	*3	165	165	165	165	112	112
Emergency Stop Torque	[Nm]	*4	250	250	250	250	200	200
Nominal Input Speed	[rpm]	*5	3800	3800	4500	4500	4500	4500
Maximum Input Speed	[rpm]	*6	8500	8500	8500	8500	8500	8500
No Load Running Torque	[Nm]	*7	0.05					
Maximum Radial Load	[N]	*8	3300					
Maximum Axial Load	[N]	*9	1700					
Maximum Tilting Moment	[Nm]	*10	170					
Moment of Inertia (≤ Ø 8)	[kgcm2]	--	0.12	0.11	0.11	0.11	0.11	0.11
Moment of Inertia (≤ Ø 14)	[kgcm2]	--	0.28	0.27	0.27	0.27	0.27	0.27
Moment of Inertia (≤ Ø 19)	[kgcm2]	--	0.67	0.67	0.67	0.67	0.67	0.67
Moment of Inertia (≤ Ø 28)	[kgcm2]	--	2.4	2.4	2.4	2.4	2.4	2.4
Efficiency	[%]	*11	90					
Torsional Rigidity	[Nm/arc-min]	*12	30	24	28	22	22	22
Maximum Torsional Backlash	[arc-min]	--	Standard ≤ 3 / Reduced ≤ 1					
Noise Level	dB [A]	*13	≤ 67					
Protection Class	--	*14	IP54 (IP65)					
Ambient Temperature	[°C]	--	0 - 40					
Permitted Housing Temperature	[°C]	--	90					
Weight	[kg]	*15	4					

*1) At nominal input speed, service life is 20,000 hours

*2) The maximum torque when starting or stopping operation. Apply Cycle Factor f_0, found on page 468, for higher duty cycle applications

*3) Permitted 10,000 times during service life. Based on 10% of maximum radial load and smooth output shaft

*4) The maximum torque allowed under a stress situation. Permitted 1,000 times during service life

*5) The average input speed at nominal input torque. Maintain housing temperature below permitted value

*6) The maximum intermittent input speed

*7) Torque at no load applied to the input shaft at nominal input speed

*8) The maximum radial load that the gearbox can accept

*9) The maximum axial load that the gearbox can accept

*10) The maximum load at output flange surface

*11) The efficiency at the nominal output torque rating

*12) This does not include lost motion

*13) Contact Nidec Drive Technology for the testing conditions and environment

*14) IP65 (wash-down) is available as an option. Contact Nidec Drive Technology for more details

*15) Weight may vary slightly between models

VRT 090 1-Stage Dimensions

Input bore size ≦φ14 mm

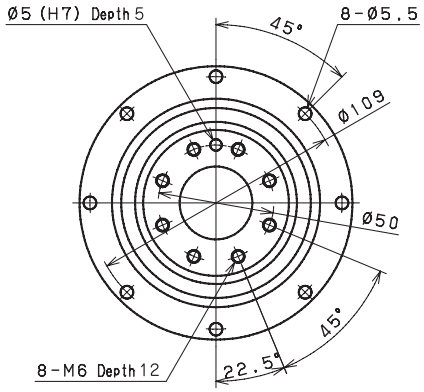

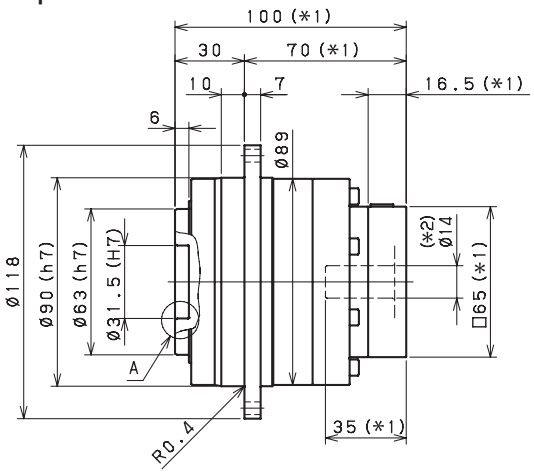

Input bore size ≦φ19 mm

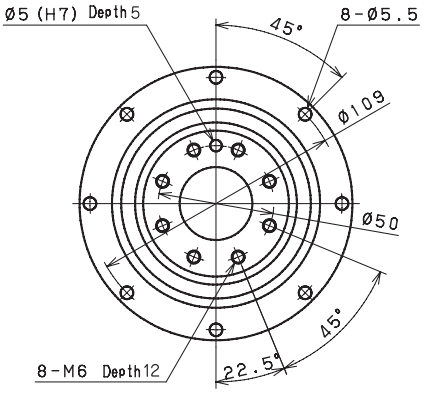

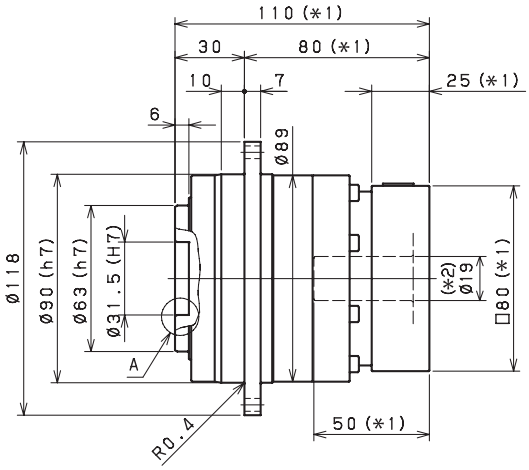

Input bore size ≦φ28 mm

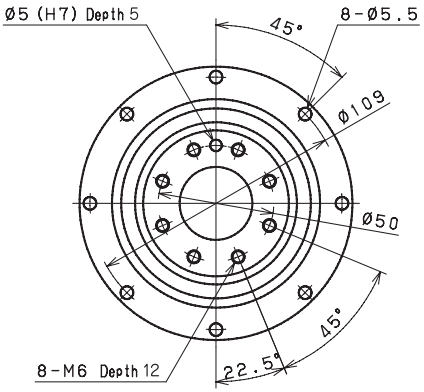

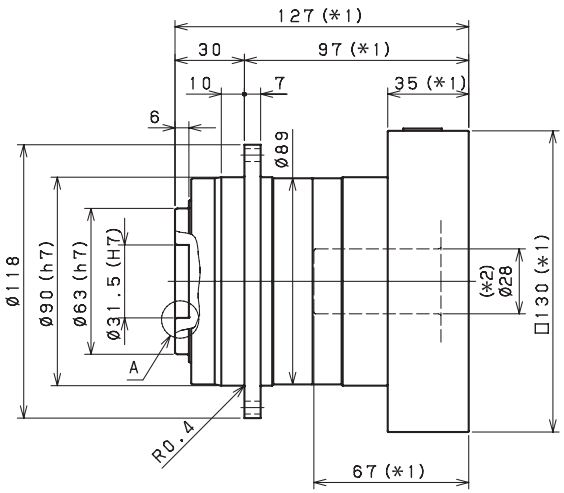

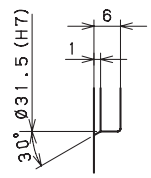

Enlarged detail A

*1) Length will vary depending on motor

*2) Bushing will be inserted to adapt to motor shaft

VRT 090 2-Stage Dimensions

Input bore size ≦φ8 mm

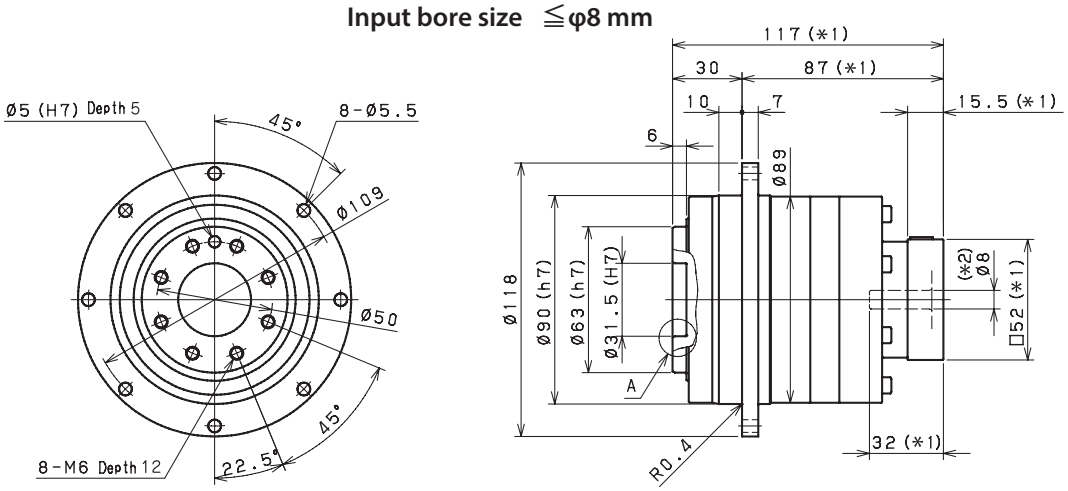

Input bore size ≦φ14 mm

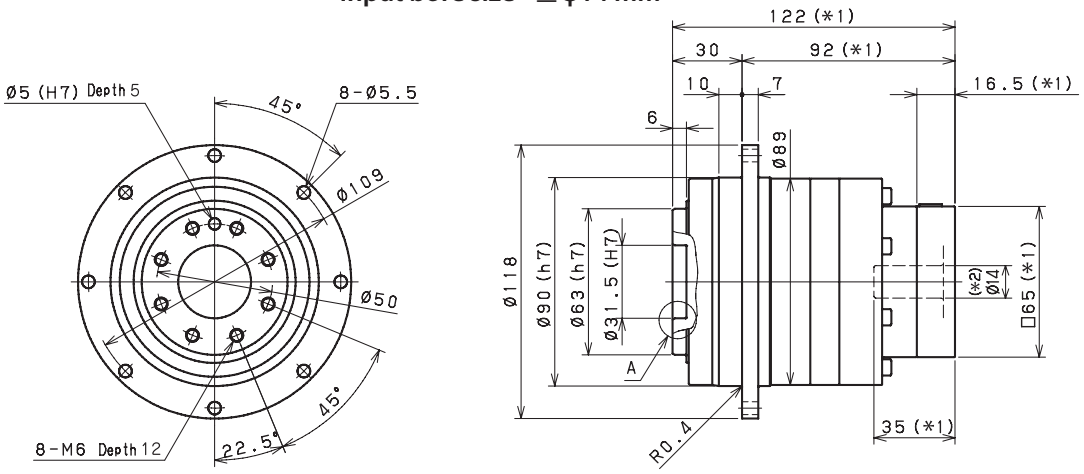

Input bore size ≦φ19 mm (*3)

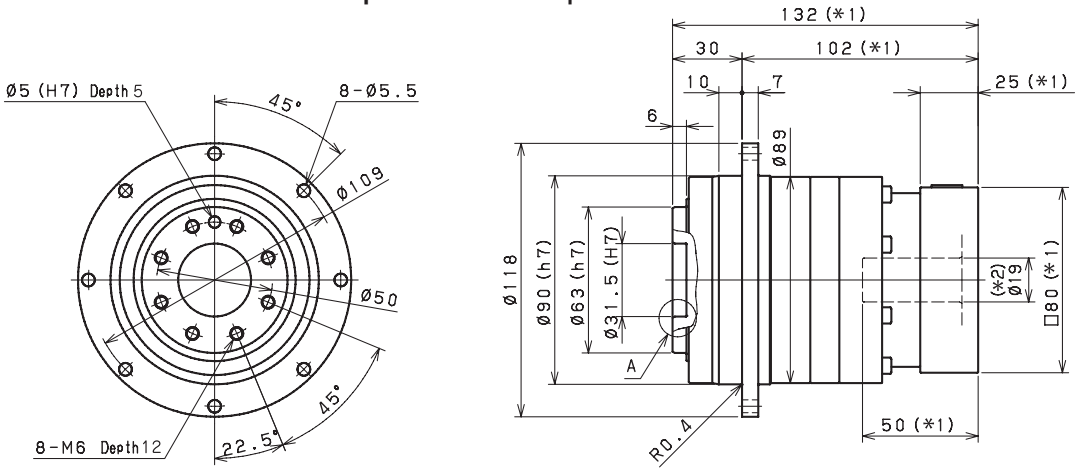

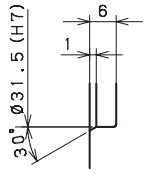

Enlarged detail A

*1) Length will vary depending on motor

*2) Bushing will be inserted to adapt to motor shaft

*3) 28mm input bore is available for this frame size. Use our online configurator to make your selection or contact us for assistance

VRT 110 1-Stage Specifications

Frame Size	**110**					
Ratio	Unit	Note	4	5	7	10
Nominal Output Torque	[Nm]	*1	146	190	190	190
Maximum Acceleration Torque	[Nm]	*2	390	390	390	292
Maximum Torque	[Nm]	*3	490	490	480	370
Emergency Stop Torque	[Nm]	*4	625	625	625	500
Nominal Input Speed	[rpm]	*5	2800	2800	2800	2800
Maximum Input Speed	[rpm]	*6	5500	5500	5500	5500
No Load Running Torque	[Nm]	*7	0.77			
Maximum Radial Load	[N]	*8	12000			
Maximum Axial Load	[N]	*9	8800			
Maximum Tilting Moment	[Nm]	*10	990			
Moment of Inertia (≤ Ø 8)	[kgcm2]	--	--	--	--	--
Moment of Inertia (≤ Ø 14)	[kgcm2]	--	--	--	--	--
Moment of Inertia (≤ Ø 19)	[kgcm2]	--	3.1	2.1	1.3	0.99
Moment of Inertia (≤ Ø 28)	[kgcm2]	--	4.8	3.8	3.1	2.7
Moment of Inertia (≤ Ø 38)	[kgcm2]	--	11	10	9.5	9.0
Efficiency	[%]	*11	95			
Torsional Rigidity	[Nm/arcmin]	*12	80	86	76	62
Maximum Torsional Backlash	[Arc-min]	--	Standard ≤ 3 / Reduced ≤ 1			
Noise Level	dB [A]	*13	≤ 71			
Protection Class	--	*14	IP54 (IP65)			
Ambient Temperature	[°C]	--	0 - 40			
Permitted Housing Temperature	[°C]	--	90			
Weight	[kg]	*15	7.8			

VRT 110 2-Stage Specifications

Frame Size	**110**					
Ratio	Unit	Note	16	20	25	28
Nominal Output Torque	[Nm]	*1	200	220	280	280
Maximum Acceleration Torque	[Nm]	*2	390	390	390	390
Maximum Torque	[Nm]	*3	390	390	390	390
Emergency Stop Torque	[Nm]	*4	625	625	625	625
Nominal Input Speed	[rpm]	*5	3100	3100	3100	3100
Maximum Input Speed	[rpm]	*6	6500	6500	6500	6500
No Load Running Torque	[Nm]	*7	0.17			
Maximum Radial Load	[N]	*8	12000			
Maximum Axial Load	[N]	*9	8800			
Maximum Tilting Moment	[Nm]	*10	990			
Moment of Inertia (≤ Ø 8)	[kgcm2]	--	-	--	--	--
Moment of Inertia (≤ Ø 14)	[kgcm2]	--	1.0	0.76	0.73	0.94
Moment of Inertia (≤ Ø 19)	[kgcm2]	--	1.4	1.1	1.1	1.3
Moment of Inertia (≤ Ø 28)	[kgcm2]	--	3.2	2.9	2.9	3.1
Moment of Inertia (≤ Ø 38)	[kgcm2]	--	9.5	9.2	9.1	9.4
Efficiency	[%]	*11	90			
Torsional Rigidity	[Nm/arcmin]	*12	81	81	83	80
Maximum Torsional Backlash	[Arc-min]	--	Standard ≤ 3 / Reduced ≤ 1			
Noise Level	dB [A]	*13	≤ 71			
Protection Class	--	*14	IP54 (IP65)			
Ambient Temperature	[°C]	--	0 - 40			
Permitted Housing Temperature	[°C]	--	90			
Weight	[kg]	*15	8.6			

VRT 110 2-Stage Specifications

Frame Size	**110**						
Ratio	Unit	Note	35	40	50	70	100
Nominal Output Torque	[Nm]	*1	280	270	280	280	220
Maximum Acceleration Torque	[Nm]	*2	390	390	390	390	292
Maximum Torque	[Nm]	*3	390	390	390	390	292
Emergency Stop Torque	[Nm]	*4	625	625	625	625	500
Nominal Input Speed	[rpm]	*5	3100	3100	3500	4200	4200
Maximum Input Speed	[rpm]	*6	6500	6500	6500	6500	6500
No Load Running Torque	[Nm]	*7	0.17				
Maximum Radial Load	[N]	*8	12000				
Maximum Axial Load	[N]	*9	8800				
Maximum Tilting Moment	[Nm]	*10	990				
Moment of Inertia (≤ Ø 8)	[kgcm2]	--	--	--	0.20	0.19	0.19
Moment of Inertia (≤ Ø 14)	[kgcm2]	--	0.70	0.38	0.37	0.36	0.36
Moment of Inertia (≤ Ø 19)	[kgcm2]	--	1.1	0.78	0.77	0.76	0.76
Moment of Inertia (≤ Ø 28)	[kgcm2]	--	2.8	2.5	2.5	2.5	2.5
Moment of Inertia (≤ Ø 38)	[kgcm2]	--	9.1	8.8	8.8	8.8	8.8
Efficiency	[%]	*11	90				
Torsional Rigidity	[Nm/arcmin]	*12	82	76	80	71	60
Maximum Torsional Backlash	[Arc-min]	--	Standard ≤ 3 / Reduced ≤ 1				
Noise Level	dB [A]	*13	≤ 71				
Protection Class	--	*14	IP54 (IP65)				
Ambient Temperature	[°C]	--	0 - 40				
Permitted Housing Temperature	[°C]	--	90				
Weight	[kg]	*15	8.6				

*1) At nominal input speed, service life is 20,000 hours

*2) The maximum torque when starting or stopping operation. Apply Cycle Factor f_0, found on page 468, for higher duty cycle applications

*3) Permitted 10,000 times during service life. Based on 10% of maximum radial load and smooth output shaft

*4) The maximum torque allowed under a stress situation. Permitted 1,000 times during service life

*5) The average input speed at nominal input torque. Maintain housing temperature below permitted value

*6) The maximum intermittent input speed

*7) Torque at no load applied to the input shaft at nominal input speed

*8) The maximum radial load that the gearbox can accept

*9) The maximum axial load that the gearbox can accept

*10) The maximum load at output flange surface

*11) The efficiency at the nominal output torque rating

*12) This does not include lost motion

*13) Contact Nidec Drive Technology for the testing conditions and environment

*14) IP65 (wash-down) is available as an option. Contact Nidec Drive Technology for more details

*15) Weight may vary slightly between models

VRT 110 1-Stage Dimensions

Input bore size ≦φ19 mm

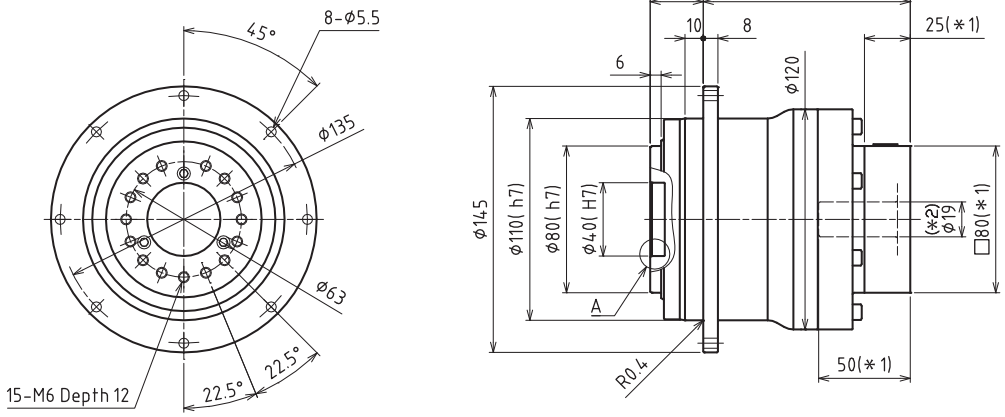

Input bore size ≦φ28 mm

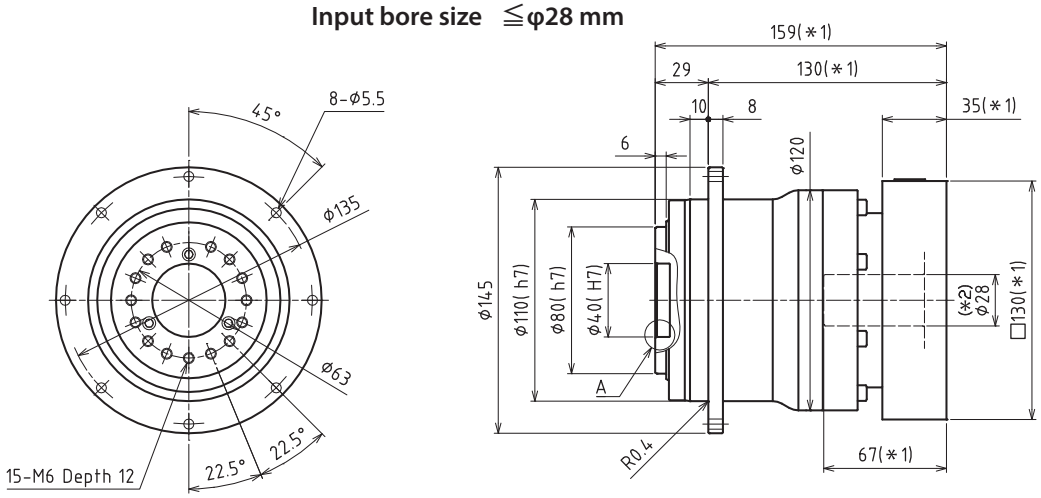

Input bore size ≦φ38 mm

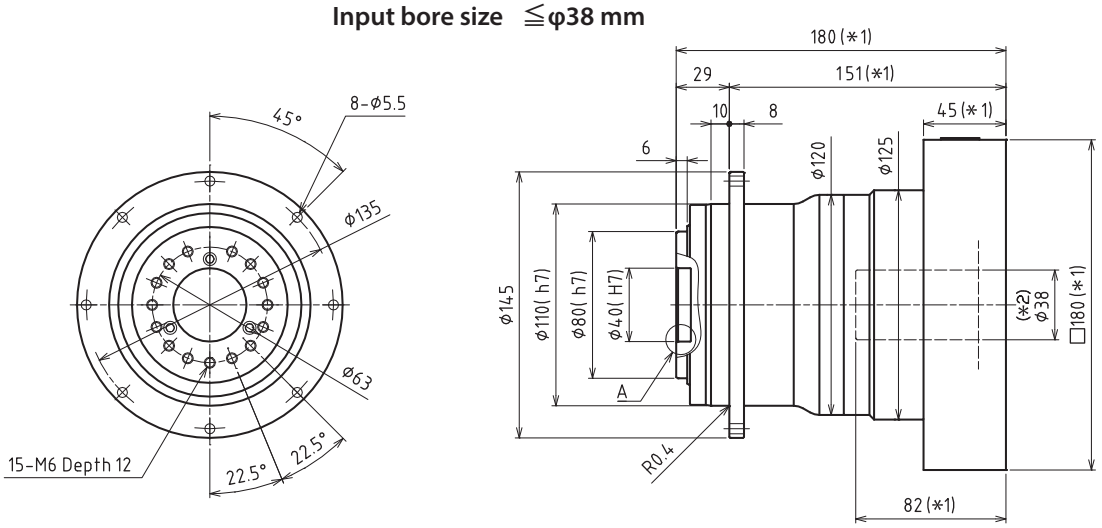

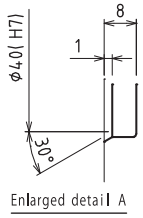

*1) Length will vary depending on motor

*2) Bushing will be inserted to adapt to motor shaft

VRT 110 2-Stage Dimensions

Input bore size ≦φ14 mm

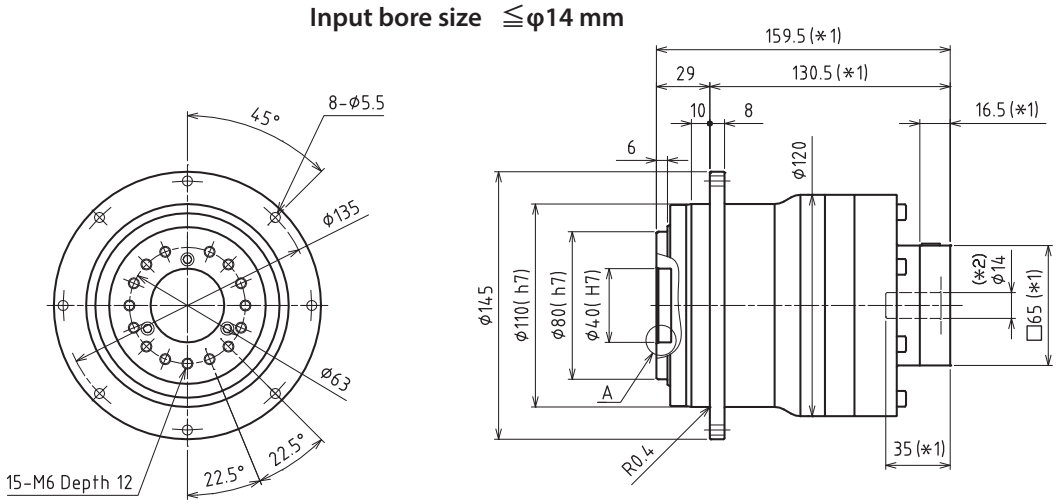

Input bore size ≦φ19 mm

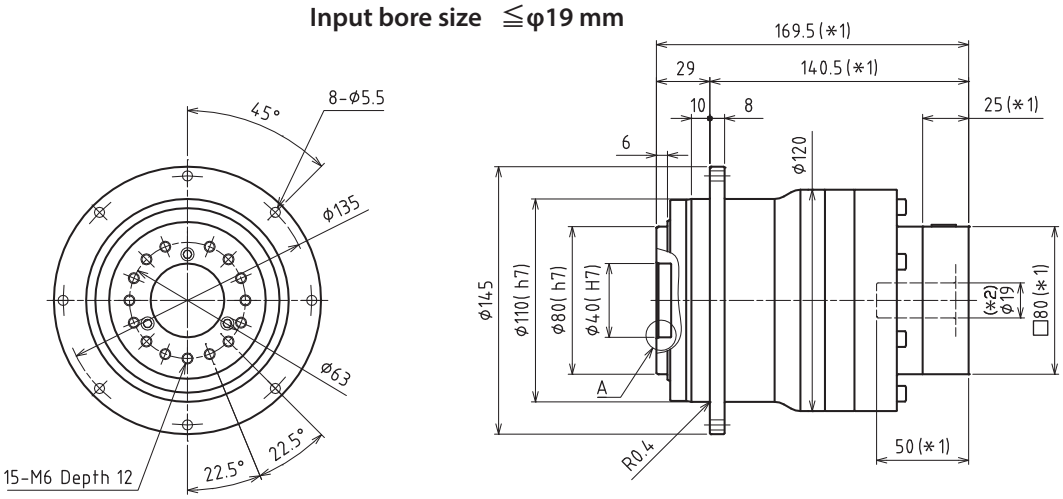

Input bore size ≦φ28 mm (*3)

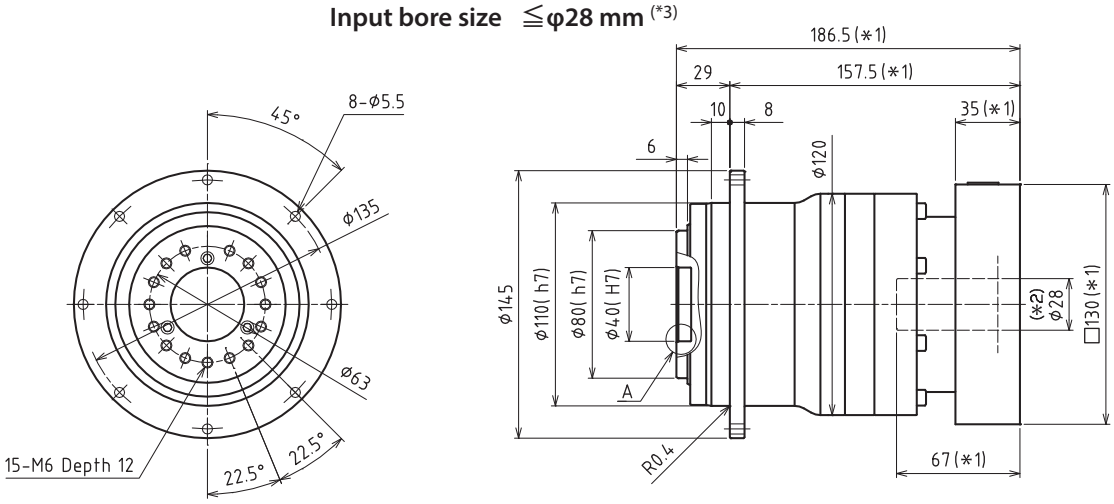

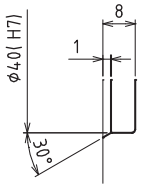

Enlarged detail A

*1) Length will vary depending on motor

*2) Bushing will be inserted to adapt to motor shaft

*3) 38mm input bore is available for this frame size. Use our online configurator to make your selection or contact us for assistance

VRT 140 1-Stage Specifications

Frame Size	**140**					
Ratio	Unit	Note	4	5	7	10
Nominal Output Torque	[Nm]	*1	280	380	380	380
Maximum Acceleration Torque	[Nm]	*2	840	840	840	610
Maximum Torque	[Nm]	*3	1000	1000	950	730
Emergency Stop Torque	[Nm]	*4	1250	1250	1250	1000
Nominal Input Speed	[rpm]	*5	2100	2100	2600	2600
Maximum Input Speed	[rpm]	*6	5000	5000	5000	5000
No Load Running Torque	[Nm]	*7	1.00			
Maximum Radial Load	[N]	*8	19000			
Maximum Axial Load	[N]	*9	14000			
Maximum Tilting Moment	[Nm]	*10	2000			
Moment of Inertia (≤ Ø 14)	[kgcm2]	--	--	--	--	--
Moment of Inertia (≤ Ø 19)	[kgcm2]	--	--	--	--	--
Moment of Inertia (≤ Ø 28)	[kgcm2]	--	11	7.7	5.1	3.8
Moment of Inertia (≤ Ø 38)	[kgcm2]	--	18	14	12	10
Moment of Inertia (≤ Ø 48)	[kgcm2]	--	33	29	27	25
Efficiency	[%]	*11	95			
Torsional Rigidity	[Nm/arcmin]	*12	190	187	159	140
Maximum Torsional Backlash	[Arc-min]	*13	Standard ≤ 3 / Reduced ≤ 1			
Noise Level	dB [A]	--	≤ 67			
Protection Class	--	*14	IP54 (IP65)			
Ambient Temperature	[°C]	--	0 - 40			
Permitted Housing Temperature	[°C]	--	90			
Weight	[kg]	*15	15			

VRT 140 2-Stage Specifications

Frame Size	**140**					
Ratio	Unit	Note	16	20	25	28
Nominal Output Torque	[Nm]	*1	380	410	590	590
Maximum Acceleration Torque	[Nm]	*2	840	840	840	840
Maximum Torque	[Nm]	*3	840	840	840	840
Emergency Stop Torque	[Nm]	*4	1250	1250	1250	1250
Nominal Input Speed	[rpm]	*5	2900	2900	2900	2900
Maximum Input Speed	[rpm]	*6	6000	6000	6000	6000
No Load Running Torque	[Nm]	*7	0.54			
Maximum Radial Load	[N]	*8	19000			
Maximum Axial Load	[N]	*9	14000			
Maximum Tilting Moment	[Nm]	*10	2000			
Moment of Inertia (≤ Ø 14)	[kgcm2]	--	--	--	--	--
Moment of Inertia (≤ Ø 19)	[kgcm2]	--	3.8	2.6	2.5	3.4
Moment of Inertia (≤ Ø 28)	[kgcm2]	--	5.5	4.3	4.2	5.1
Moment of Inertia (≤ Ø 38)	[kgcm2]	--	12	11	11	11
Moment of Inertia (≤ Ø 48)	[kgcm2]	--	27	26	25	26
Efficiency	[%]	*11	90			
Torsional Rigidity	[Nm/arcmin]	*12	180	185	180	180
Maximum Torsional Backlash	[Arc-min]	*13	Standard ≤ 3 / Reduced ≤ 1			
Noise Level	dB [A]	--	≤ 67			
Protection Class	--	*14	IP54 (IP65)			
Ambient Temperature	[°C]	--	0 - 40			
Permitted Housing Temperature	[°C]	--	90			
Weight	[kg]	*15	17			

VRT 140 2-Stage Specifications

Frame Size	**140**						
Ratio	Unit	Note	35	40	50	70	100
Nominal Output Torque	[Nm]	*1	590	500	590	590	440
Maximum Acceleration Torque	[Nm]	*2	840	840	840	840	610
Maximum Torque	[Nm]	*3	840	840	840	840	610
Emergency Stop Torque	[Nm]	*4	1250	1250	1250	1250	1000
Nominal Input Speed	[rpm]	*5	2900	2900	3200	3900	3900
Maximum Input Speed	[rpm]	*6	6000	6000	6000	6000	6000
No Load Running Torque	[Nm]	*7	0.54				
Maximum Radial Load	[N]	*8	19000				
Maximum Axial Load	[N]	*9	14000				
Maximum Tilting Moment	[Nm]	*10	2000				
Moment of Inertia (≤ Ø 14)	[kgcm2]	--	--	--	0.68	0.65	0.64
Moment of Inertia (≤ Ø 19)	[kgcm2]	--	2.4	1.1	1.1	1.1	1.1
Moment of Inertia (≤ Ø 28)	[kgcm2]	--	4.1	2.9	2.9	2.8	2.8
Moment of Inertia (≤ Ø 38)	[kgcm2]	--	10	9.2	9.1	9.1	9.1
Moment of Inertia (≤ Ø 48)	[kgcm2]	--	25	24	24	24	24
Efficiency	[%]	*11	90				
Torsional Rigidity	[Nm/arcmin]	*12	175	175	175	145	140
Maximum Torsional Backlash	[Arc-min]	*13	Standard ≤ 3 / Reduced ≤ 1				
Noise Level	dB [A]	--	≤ 67				
Protection Class	--	*14	IP54 (IP65)				
Ambient Temperature	[°C]	--	0 - 40				
Permitted Housing Temperature	[°C]	--	90				
Weight	[kg]	*15	17				

*1) At nominal input speed, service life is 20,000 hours

*2) The maximum torque when starting or stopping operation. Apply Cycle Factor f_0, found on page 468, for higher duty cycle applications

*3) Permitted 10,000 times during service life. Based on 10% of maximum radial load and smooth output shaft

*4) The maximum torque allowed under a stress situation. Permitted 1,000 times during service life

*5) The average input speed at nominal input torque. Maintain housing temperature below permitted value

*6) The maximum intermittent input speed

*7) Torque at no load applied to the input shaft at nominal input speed

*8) The maximum radial load that the gearbox can accept

*9) The maximum axial load that the gearbox can accept

*10) The maximum load at output flange surface

*11) The efficiency at the nominal output torque rating

*12) This does not include lost motion

*13) Contact Nidec Drive Technology for the testing conditions and environment

*14) IP65 (wash-down) is available as an option. Contact Nidec Drive Technology for more details

*15) Weight may vary slightly between models

VRT 140 1-Stage Dimensions

Input bore size ≦φ28 mm

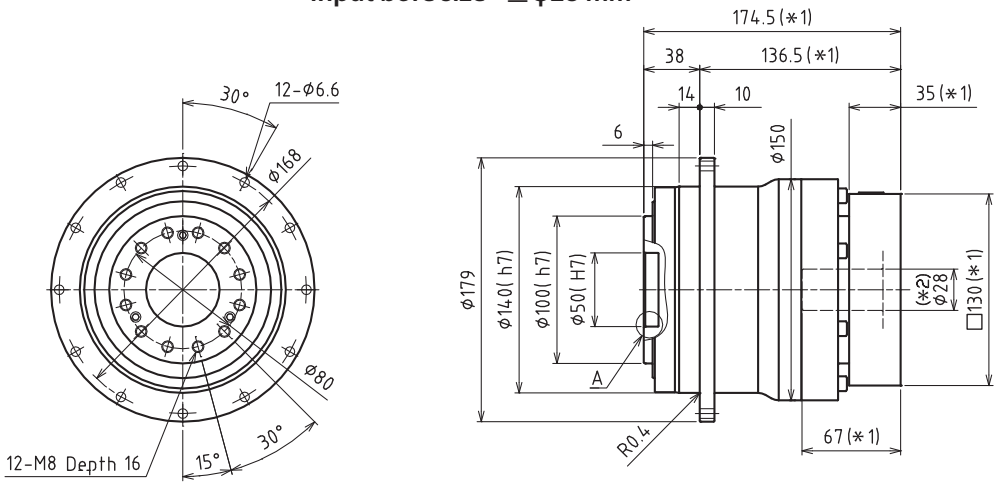

Input bore size ≦φ38 mm

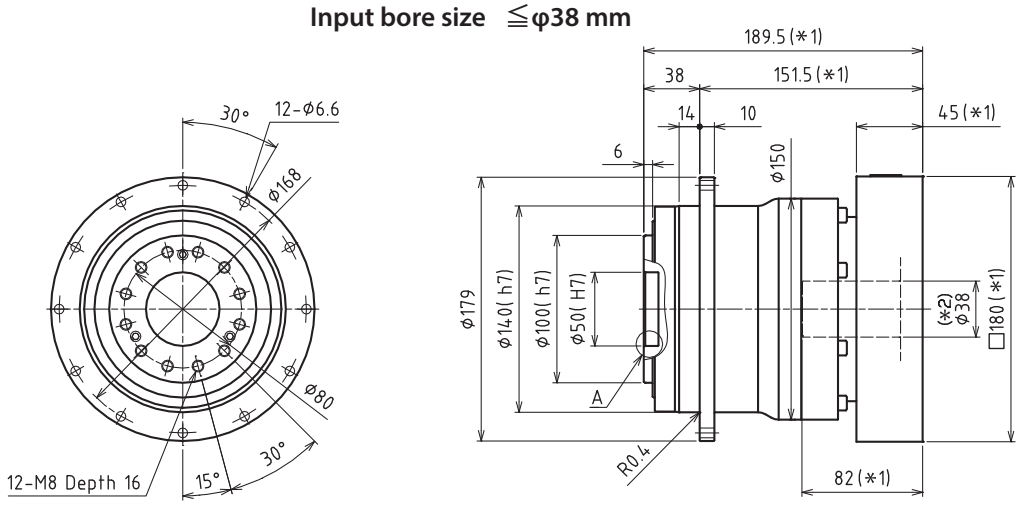

Input bore size ≦φ48 mm

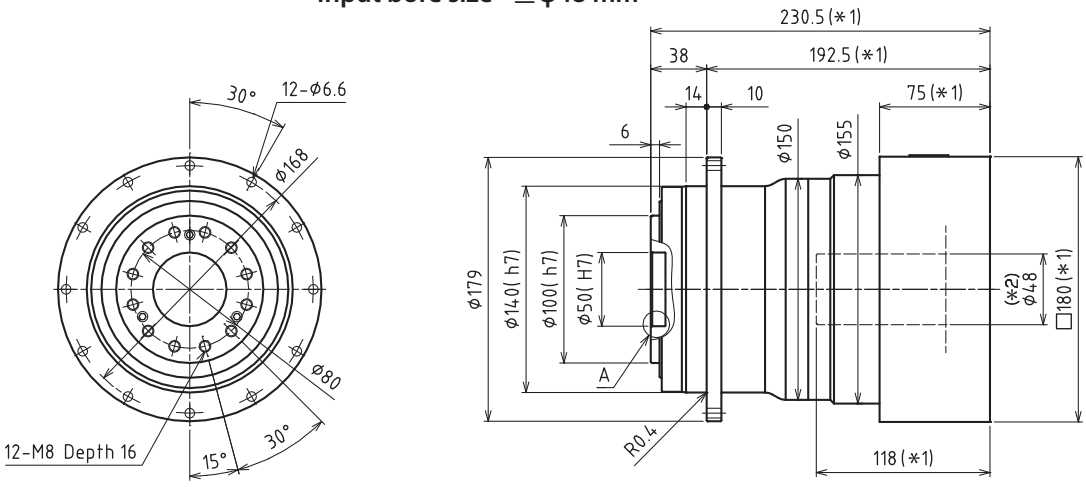

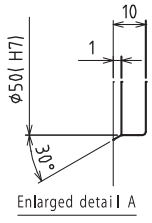

*1) Length will vary depending on motor.

*2) Bushing will be inserted to adapt to motor shaft

VRT 140 2-Stage Dimensions

Input bore size ≦φ19 mm

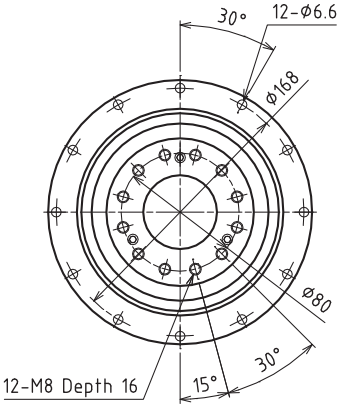

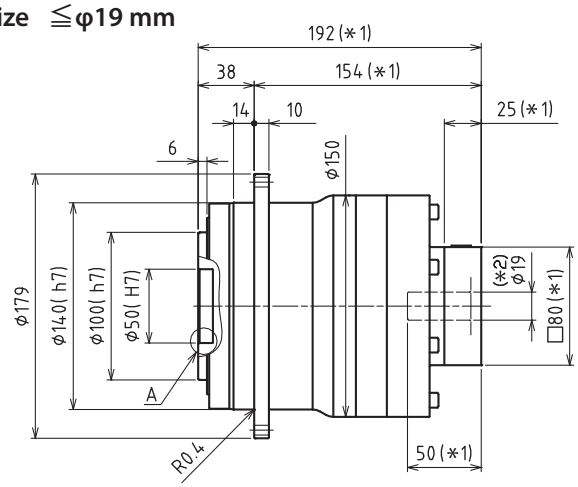

Input bore size ≦φ28 mm

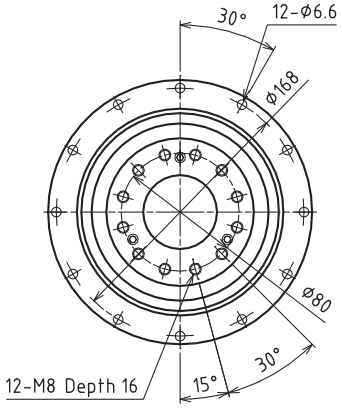

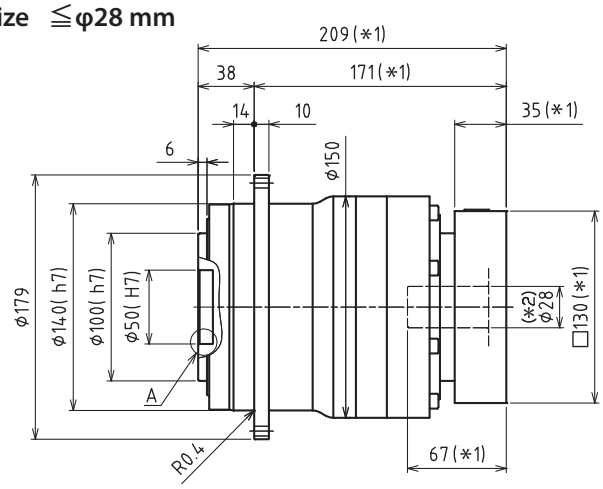

Input bore size ≦φ38 mm (*3)

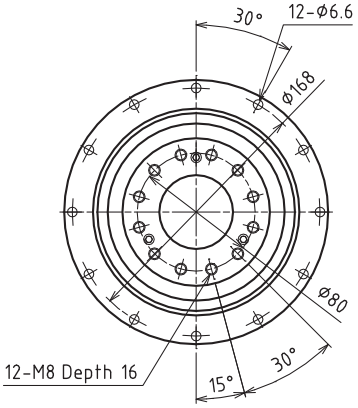

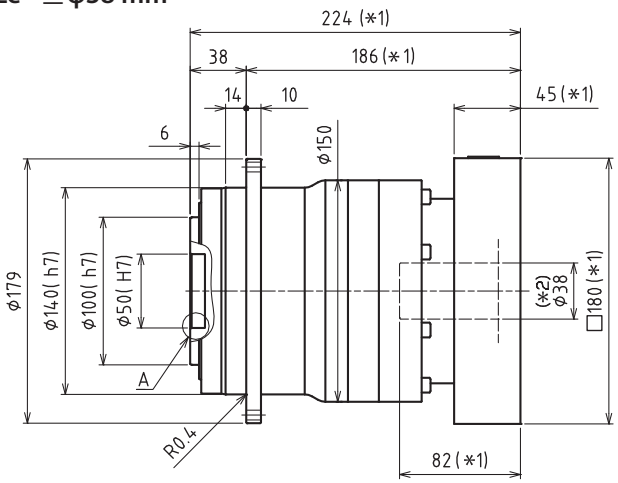

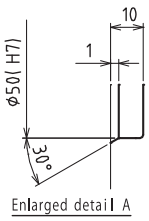

*1) Length will vary depending on motor

*2) Bushing will be inserted to adapt to motor shaft

*3) 48mm input bore is available for this frame size. Use our online configurator to make your selection or contact us for assistance

VRT 200 1-Stage Specifications

Frame Size	**200**					
Ratio	Unit	Note	4	5	7	10
Nominal Output Torque	[Nm]	*1	850	910	910	910
Maximum Acceleration Torque	[Nm]	*2	1850	1850	1850	1350
Maximum Torque	[Nm]	*3	2250	2250	2150	1750
Emergency Stop Torque	[Nm]	*4	2750	2750	2750	2200
Nominal Input Speed	[rpm]	*5	1500	1500	2300	2300
Maximum Input Speed	[rpm]	*6	4500	4500	4500	4500
No Load Running Torque	[Nm]	*7	1.9			
Maximum Radial Load	[N]	*8	40000			
Maximum Axial Load	[N]	*9	30000			
Maximum Tilting Moment	[Nm]	*10	5300			
Moment of Inertia (≤ Ø 19)	[kgcm2]	--	--	--	--	--
Moment of Inertia (≤ Ø 28)	[kgcm2]	--	--	--	--	--
Moment of Inertia (≤ Ø 38)	[kgcm2]	--	53	36	23	16
Moment of Inertia (≤ Ø 48)	[kgcm2]	--	68	51	37	31
Moment of Inertia (≤ Ø 65)	[kgcm2]	--	110	95	81	75
Efficiency	[%]	*11	95			
Torsional Rigidity	[Nm/arcmin]	*12	610	610	550	445
Maximum Torsional Backlash	[Arc-min]	*13	Standard ≤ 3 / Reduced ≤ 1			
Noise Level	dB [A]	--	≤ 67			
Protection Class	--	*14	IP54 (IP65)			
Ambient Temperature	[°C]	--	0 - 40			
Permitted Housing Temperature	[°C]	--	90			
Weight	[kg]	*15	42			

VRT 200 2-Stage Specifications

Frame Size	**200**					
Ratio	Unit	Note	16	20	25	28
Nominal Output Torque	[Nm]	*1	850	910	1100	1300
Maximum Acceleration Torque	[Nm]	*2	1850	1850	1850	1850
Maximum Torque	[Nm]	*3	1850	1850	1850	1850
Emergency Stop Torque	[Nm]	*4	2750	2750	2750	2750
Nominal Input Speed	[rpm]	*5	2700	2700	2700	2700
Maximum Input Speed	[rpm]	*6	5000	5000	5000	5000
No Load Running Torque	[Nm]	*7	1.3			
Maximum Radial Load	[N]	*8	40000			
Maximum Axial Load	[N]	*9	30000			
Maximum Tilting Moment	[Nm]	*10	5300			
Moment of Inertia (≤ Ø 19)	[kgcm2]	--	--	--	--	--
Moment of Inertia (≤ Ø 28)	[kgcm2]	--	13	9.2	8.6	11
Moment of Inertia (≤ Ø 38)	[kgcm2]	--	19	15	15	18
Moment of Inertia (≤ Ø 48)	[kgcm2]	--	34	30	30	32
Moment of Inertia (≤ Ø 65)	[kgcm2]	--	--	--	--	--
Efficiency	[%]	*11	90			
Torsional Rigidity	[Nm/arcmin]	*12	585	580	570	560
Maximum Torsional Backlash	[Arc-min]	*13	Standard ≤ 3 / Reduced ≤ 1			
Noise Level	dB [A]	--	≤ 67			
Protection Class	--	*14	IP54 (IP65)			
Ambient Temperature	[°C]	--	0 - 40			
Permitted Housing Temperature	[°C]	--	90			
Weight	[kg]	*15	43			

VRT 200 2-Stage Specifications

Frame Size	**200**						
Ratio	Unit	Note	35	40	50	70	100
Nominal Output Torque	[Nm]	*1	1300	1200	1300	1300	930
Maximum Acceleration Torque	[Nm]	*2	1850	1850	1850	1850	1350
Maximum Torque	[Nm]	*3	1850	1850	1850	1850	1350
Emergency Stop Torque	[Nm]	*4	2750	2750	2750	2750	2200
Nominal Input Speed	[rpm]	*5	2700	2700	2900	3400	3400
Maximum Input Speed	[rpm]	*6	5000	5000	5000	5000	5000
No Load Running Torque	[Nm]	*7	1.3				
Maximum Radial Load	[N]	*8	40000				
Maximum Axial Load	[N]	*9	30000				
Maximum Tilting Moment	[Nm]	*10	5300				
Moment of Inertia (≤ Ø 19)	[kgcm2]	--	--	--	2.1	1.9	1.9
Moment of Inertia (≤ Ø 28)	[kgcm2]	--	8.0	4.1	4.0	3.8	3.8
Moment of Inertia (≤ Ø 38)	[kgcm2]	--	14	10	10	10	10
Moment of Inertia (≤ Ø 48)	[kgcm2]	--	29	25	25	25	25
Moment of Inertia (≤ Ø 65)	[kgcm2]	--	--	--	--	--	--
Efficiency	[%]	*11	90				
Torsional Rigidity	[Nm/arcmin]	*12	560	520	525	480	395
Maximum Torsional Backlash	[Arc-min]	*13	Standard ≤ 3 / Reduced ≤ 1				
Noise Level	dB [A]	--	≤ 67				
Protection Class	--	*14	IP54 (IP65)				
Ambient Temperature	[°C]	--	0 - 40				
Permitted Housing Temperature	[°C]	--	90				
Weight	[kg]	*15	43				

*1) At nominal input speed, service life is 20,000 hours

*2) The maximum torque when starting or stopping operation. Apply Cycle Factor f_0, found on page 468, for higher duty cycle applications

*3) Permitted 10,000 times during service life. Based on 10% of maximum radial load and smooth output shaft

*4) The maximum torque allowed under a stress situation. Permitted 1,000 times during service life

*5) The average input speed at nominal input torque. Maintain housing temperature below permitted value

*6) The maximum intermittent input speed

*7) Torque at no load applied to the input shaft at nominal input speed

*8) The maximum radial load that the gearbox can accept

*9) The maximum axial load that the gearbox can accept

*10) The maximum load at output flange surface

*11) The efficiency at the nominal output torque rating

*12) This does not include lost motion

*13) Contact Nidec Drive Technology for the testing conditions and environment

*14) IP65 (wash-down) is available as an option. Contact Nidec Drive Technology for more details

*15) Weight may vary slightly between models

VRT 200 1-Stage Dimensions

Input bore size ≦φ38 mm

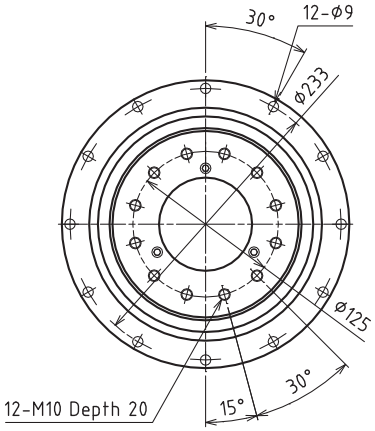

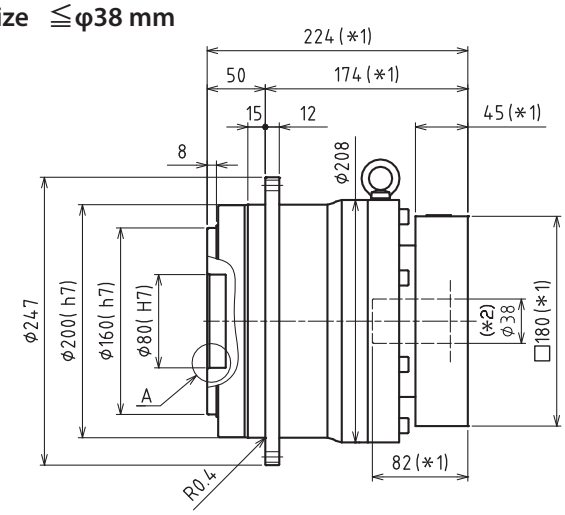

Input bore size ≦φ48 mm

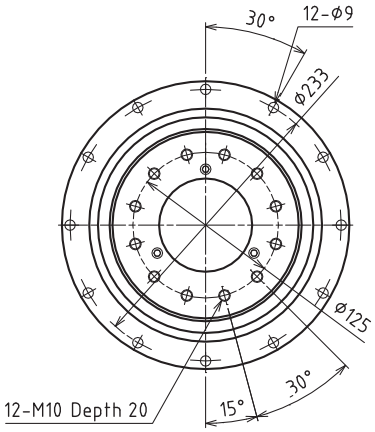

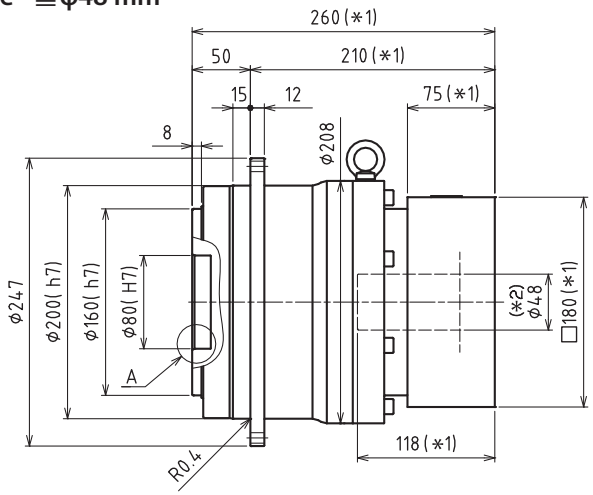

Input bore size ≦φ65 mm

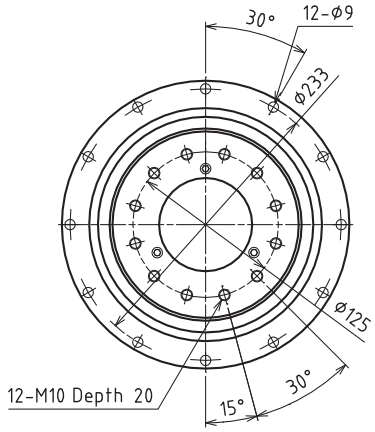

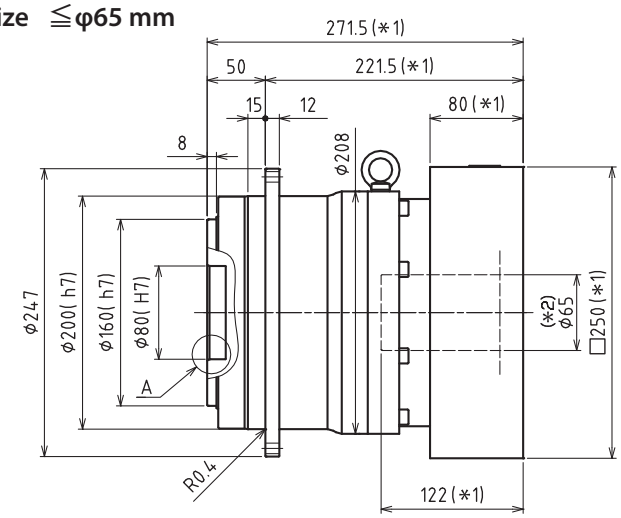

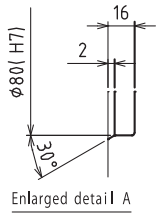

*1) Length will vary depending on motor

*2) Bushing will be inserted to adapt to motor shaft

VRT 200 2-Stage Dimensions

Input bore size ≦φ28 mm

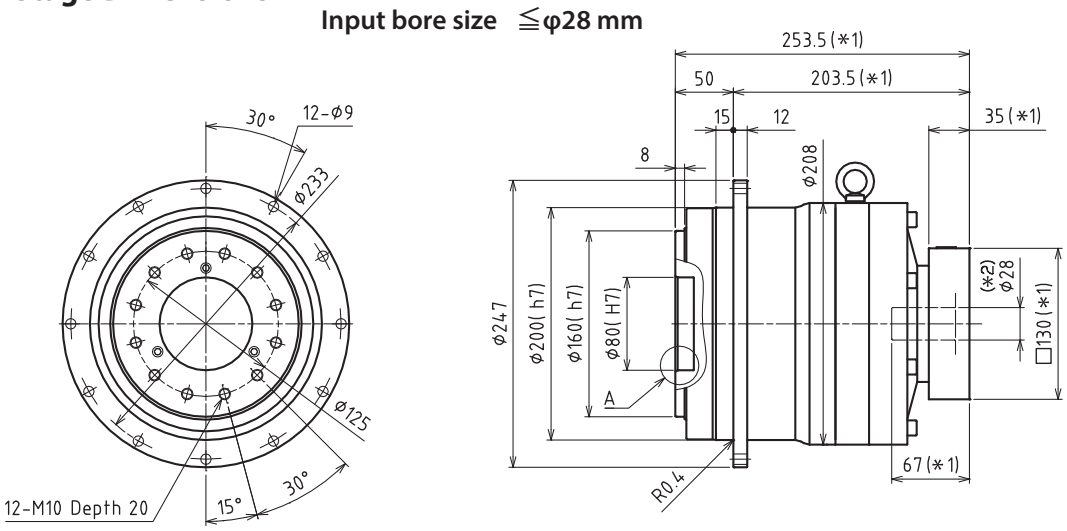

Input bore size ≦φ38 mm

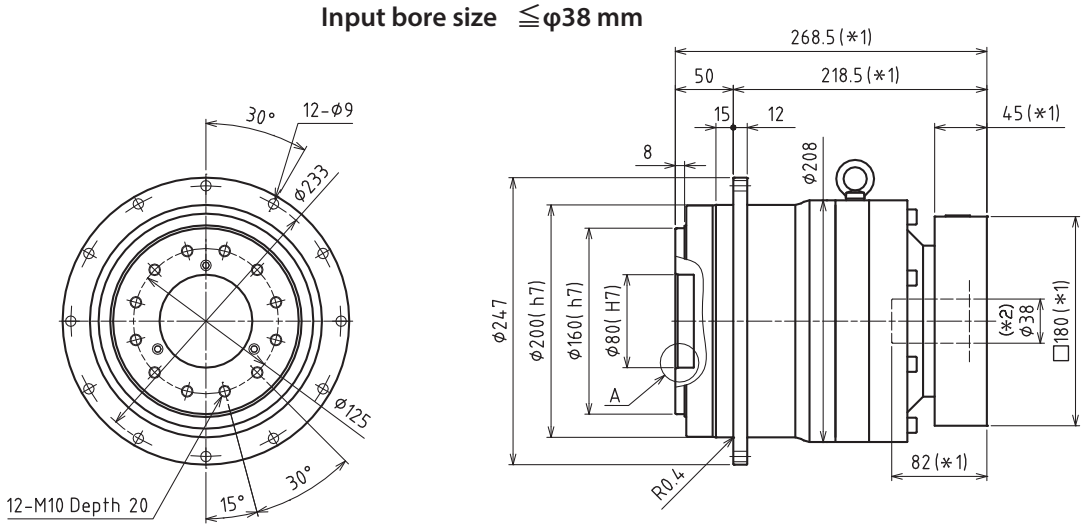

Input bore size ≦φ48 mm

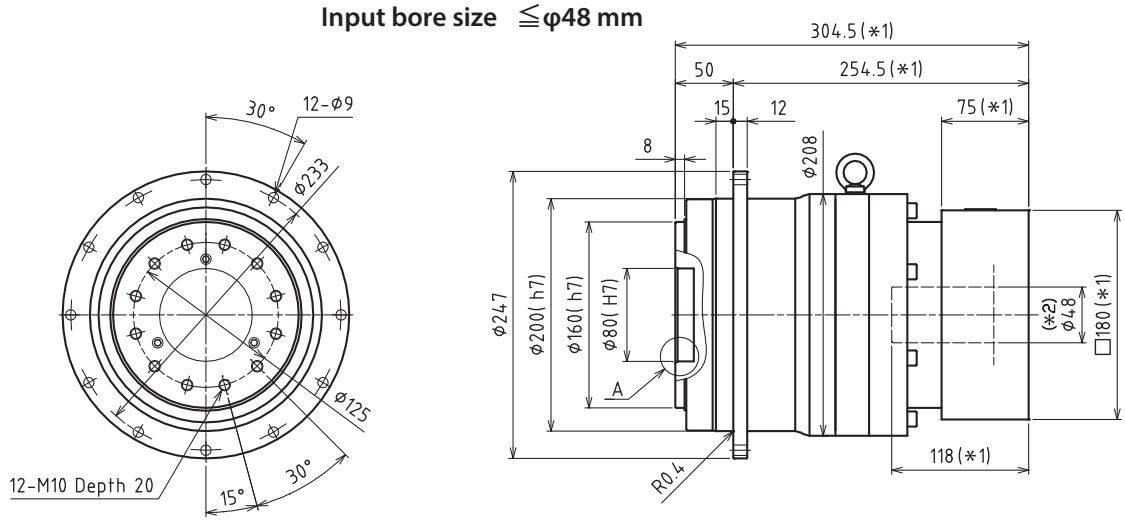

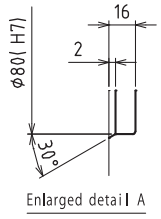

*1) Length will vary depending on motor

*2) Bushing will be inserted to adapt to motor shaft

VRT 255 1-Stage Specifications

Frame Size	**255**					
Ratio	Unit	Note	4	5	7	10
Nominal Output Torque	[Nm]	*1	2400	2400	2700	2700
Maximum Acceleration Torque	[Nm]	*2	5100	5100	4800	3600
Maximum Torque	[Nm]	*3	5700	5700	5400	4100
Emergency Stop Torque	[Nm]	*4	8000	8000	8000	6000
Nominal Input Speed	[rpm]	*5	1000	1200	1500	1700
Maximum Input Speed	[rpm]	*6	3000	3000	3000	3000
No Load Running Torque	[Nm]	*7	2.5			
Maximum Radial Load	[N]	*8	64000			
Maximum Axial Load	[N]	*9	48000			
Maximum Tilting Moment	[Nm]	*10	11000			
Moment of Inertia (≤ Ø 38)	[kgcm2]	--	--	--	--	--
Moment of Inertia (≤ Ø 48)	[kgcm2]	--	--	--	--	--
Moment of Inertia (≤ Ø 65)	[kgcm2]	--	180	130	100	84
Efficiency	[%]	*11	95			
Torsional Rigidity	[Nm/arcmin]	*12	840	1000	900	840
Maximum Torsional Backlash	[Arc-min]	*13	≤ 3			
Noise Level	dB [A]	--	≤ 62			
Protection Class	--	*14	IP54 (IP65)			
Ambient Temperature	[°C]	--	0 - 40			
Permitted Housing Temperature	[°C]	--	90			
Weight	[kg]	*15	84			

VRT 255 2-Stage Specifications

Frame Size	**255**					
Ratio	Unit	Note	16	20	25	28
Nominal Output Torque	[Nm]	*1	2400	2600	3200	3400
Maximum Acceleration Torque	[Nm]	*2	5100	5100	5100	4900
Maximum Torque	[Nm]	*3	5100	5100	5100	4900
Emergency Stop Torque	[Nm]	*4	8000	8000	8000	8000
Nominal Input Speed	[rpm]	*5	2000	2000	2000	2000
Maximum Input Speed	[rpm]	*6	4500	4500	4500	4500
No Load Running Torque	[Nm]	*7	1.0			
Maximum Radial Load	[N]	*8	64000			
Maximum Axial Load	[N]	*9	48000			
Maximum Tilting Moment	[Nm]	*10	11000			
Moment of Inertia (≤ Ø 38)	[kgcm2]	--	--	--	--	--
Moment of Inertia (≤ Ø 48)	[kgcm2]	--	58	47	45	53
Moment of Inertia (≤ Ø 65)	[kgcm2]	--	--	--	--	--
Efficiency	[%]	*11	90			
Torsional Rigidity	[Nm/arcmin]	*12	840	850	950	840
Maximum Torsional Backlash	[Arc-min]	*13	≤ 3			
Noise Level	dB [A]	--	≤ 62			
Protection Class	--	*14	IP54 (IP65)			
Ambient Temperature	[°C]	--	0 - 40			
Permitted Housing Temperature	[°C]	--	90			
Weight	[kg]	*15	89			

VRT 255 2-Stage Specifications

Frame Size	**255**						
Ratio	Unit	Note	35	40	50	70	100
Nominal Output Torque	[Nm]	*1	3400	3400	3400	3400	2000
Maximum Acceleration Torque	[Nm]	*2	4900	5100	5100	4900	2500
Maximum Torque	[Nm]	*3	4900	5100	5100	4900	2500
Emergency Stop Torque	[Nm]	*4	8000	8000	8000	8000	6000
Nominal Input Speed	[rpm]	*5	2000	2000	2200	2800	2800
Maximum Input Speed	[rpm]	*6	4500	4500	4500	4500	4500
No Load Running Torque	[Nm]	*7	1.0				
Maximum Radial Load	[N]	*8	64000				
Maximum Axial Load	[N]	*9	48000				
Maximum Tilting Moment	[Nm]	*10	11000				
Moment of Inertia (≤ Ø 38)	[kgcm2]	--	--	--	14	13	13
Moment of Inertia (≤ Ø 48)	[kgcm2]	--	44	32	32	31	31
Moment of Inertia (≤ Ø 65)	[kgcm2]	--	--	--	--	--	--
Efficiency	[%]	*11	90				
Torsional Rigidity	[Nm/arcmin]	*12	900	840	840	840	840
Maximum Torsional Backlash	[Arc-min]	*13	≤ 3				
Noise Level	dB [A]	--	≤ 62				
Protection Class	--	*14	IP54 (IP65)				
Ambient Temperature	[°C]	--	0 - 40				
Permitted Housing Temperature	[°C]	--	90				
Weight	[kg]	*15	89				

*1) At nominal input speed, service life is 20,000 hours

*2) The maximum torque when starting or stopping operation. Apply Cycle Factor $\mathbf{f_0}$, found on page 468, for higher duty cycle applications

*3) Permitted 10,000 times during service life. Based on 10% of maximum radial load and smooth output shaft

*4) The maximum torque allowed under a stress situation. Permitted 1,000 times during service life

*5) The average input speed at nominal input torque. Maintain housing temperature below permitted value

*6) The maximum intermittent input speed

*7) Torque at no load applied to the input shaft at nominal input speed

*8) The maximum radial load that the gearbox can accept

*9) The maximum axial load that the gearbox can accept

*10) The maximum load at output flange surface

*11) The efficiency at the nominal output torque rating

*12) This does not include lost motion

*13) Contact Nidec Drive Technology for the testing conditions and environment

*14) IP65 (wash-down) is available as an option. Contact Nidec Drive Technology for more details

*15) Weight may vary slightly between models

VRT 255 1-Stage Dimensions

Input bore size ≦φ65 mm

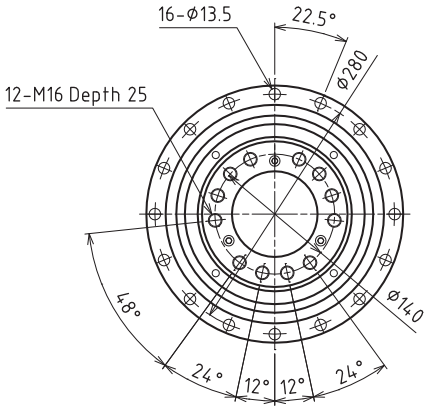

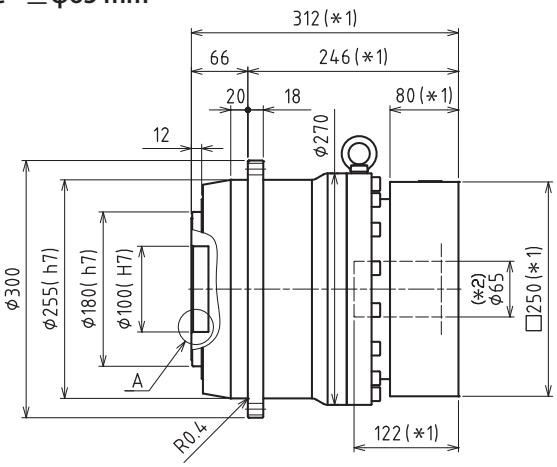

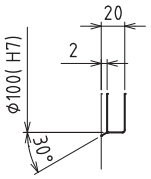

Enlarged detail A

*1) Length will vary depending on motor

*2) Bushing will be inserted to adapt to motor shaft

VRT 255 2-Stage Dimensions

Input bore size ≦φ48 mm

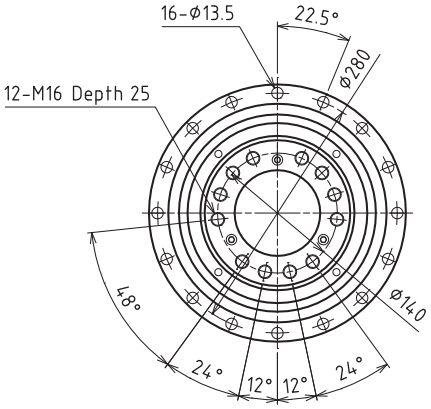

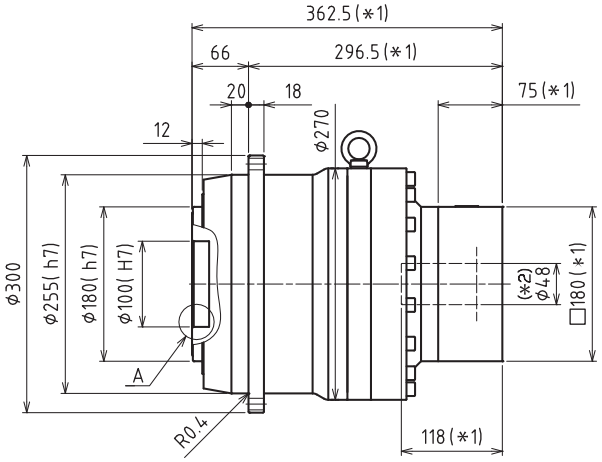

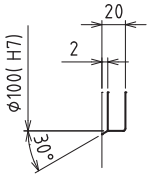

Enlarged detail A

*1) Length will vary depending on motor

*2) Bushing will be inserted to adapt to motor shaft

VRT

VRT 285 1-Stage Specifications

Frame Size	**285**					
Ratio	Unit	Note	4	5	7	10
Nominal Output Torque	[Nm]	*1	3400	3400	3400	3400
Maximum Acceleration Torque	[Nm]	*2	6700	6700	6700	5100
Maximum Torque	[Nm]	*3	7500	7500	7500	5900
Emergency Stop Torque	[Nm]	*4	12000	12000	12000	10000
Nominal Input Speed	[rpm]	*5	900	1100	1300	1300
Maximum Input Speed	[rpm]	*6	3000	3000	3000	3000
No Load Running Torque	[Nm]	*7	2.7			
Maximum Radial Load	[N]	*8	86000			
Maximum Axial Load	[N]	*9	64000			
Maximum Tilting Moment	[Nm]	*10	18000			
Moment of Inertia (≤ Ø 38)	[kgcm2]	--	--	--	--	--
Moment of Inertia (≤ Ø 48)	[kgcm2]	--	--	--	--	--
Moment of Inertia (≤ Ø 65)	[kgcm2]	--	270	190	130	96
Efficiency	[%]	*11	95			
Torsional Rigidity	[Nm/arcmin]	*12	1200	1450	1300	1200
Maximum Torsional Backlash	[Arc-min]	*13	≤ 3			
Noise Level	dB [A]	--	≤ 63			
Protection Class	--	*14	IP54 (IP65)			
Ambient Temperature	[°C]	--	0 - 40			
Permitted Housing Temperature	[°C]	--	90			
Weight	[kg]	*15	110			

VRT 285 2-Stage Specifications

Frame Size	**285**					
Ratio	Unit	Note	16	20	25	28
Nominal Output Torque	[Nm]	*1	2700	2900	3600	4200
Maximum Acceleration Torque	[Nm]	*2	6700	6700	6700	6700
Maximum Torque	[Nm]	*3	6700	6700	6700	6700
Emergency Stop Torque	[Nm]	*4	12000	12000	12000	12000
Nominal Input Speed	[rpm]	*5	1500	1500	1500	1500
Maximum Input Speed	[rpm]	*6	4000	4000	4000	4000
No Load Running Torque	[Nm]	*7	0.6			
Maximum Radial Load	[N]	*8	86000			
Maximum Axial Load	[N]	*9	64000			
Maximum Tilting Moment	[Nm]	*10	18000			
Moment of Inertia (≤ Ø 38)	[kgcm2]	--	--	--	--	--
Moment of Inertia (≤ Ø 48)	[kgcm2]	--	63	50	47	55
Moment of Inertia (≤ Ø 65)	[kgcm2]	--	--	--	--	--
Efficiency	[%]	*11	90			
Torsional Rigidity	[Nm/arcmin]	*12	1200	1400	1450	1200
Maximum Torsional Backlash	[Arc-min]	*13	≤ 3			
Noise Level	dB [A]	--	≤ 63			
Protection Class	--	*14	IP54 (IP65)			
Ambient Temperature	[°C]	--	0 - 40			
Permitted Housing Temperature	[°C]	--	90			
Weight	[kg]	*15	120			

VRT 285 2-Stage Specifications

Frame Size	**285**						
Ratio	Unit	Note	35	40	50	70	100
Nominal Output Torque	[Nm]	*1	4200	4200	4200	4200	2700
Maximum Acceleration Torque	[Nm]	*2	6700	6700	6700	6700	3400
Maximum Torque	[Nm]	*3	6700	6700	6700	6700	3400
Emergency Stop Torque	[Nm]	*4	12000	12000	12000	12000	10000
Nominal Input Speed	[rpm]	*5	1500	1500	2000	2200	2200
Maximum Input Speed	[rpm]	*6	4000	4000	4000	4000	4000
No Load Running Torque	[Nm]	*7	0.6				
Maximum Radial Load	[N]	*8	86000				
Maximum Axial Load	[N]	*9	64000				
Maximum Tilting Moment	[Nm]	*10	18000				
Moment of Inertia (≤ Ø 38)	[kgcm2]	--	--	--	14	14	13
Moment of Inertia (≤ Ø 48)	[kgcm2]	--	45	33	32	31	31
Moment of Inertia (≤ Ø 65)	[kgcm2]	--	--	--	--	--	--
Efficiency	[%]	*11	90				
Torsional Rigidity	[Nm/arcmin]	*12	1400	1200	1300	1250	1200
Maximum Torsional Backlash	[Arc-min]	*13	≤ 3				
Noise Level	dB [A]	--	≤ 63				
Protection Class	--	*14	IP54 (IP65)				
Ambient Temperature	[°C]	--	0 - 40				
Permitted Housing Temperature	[°C]	--	90				
Weight	[kg]	*15	120				

*1) At nominal input speed, service life is 20,000 hours

*2) The maximum torque when starting or stopping operation. Apply Cycle Factor f_0, found on page 468, for higher duty cycle applications

*3) Permitted 10,000 times during service life. Based on 10% of maximum radial load and smooth output shaft

*4) The maximum torque allowed under a stress situation. Permitted 1,000 times during service life

*5) The average input speed at nominal input torque. Maintain housing temperature below permitted value

*6) The maximum intermittent input speed

*7) Torque at no load applied to the input shaft at nominal input speed

*8) The maximum radial load that the gearbox can accept

*9) The maximum axial load that the gearbox can accept

*10) The maximum load at output flange surface

*11) The efficiency at the nominal output torque rating

*12) This does not include lost motion

*13) Contact Nidec Drive Technology for the testing conditions and environment

*14) IP65 (wash-down) is available as an option. Contact Nidec Drive Technology for more details

*15) Weight may vary slightly between models

VRT 285 1-Stage Dimensions

Input bore size ≦φ65 mm

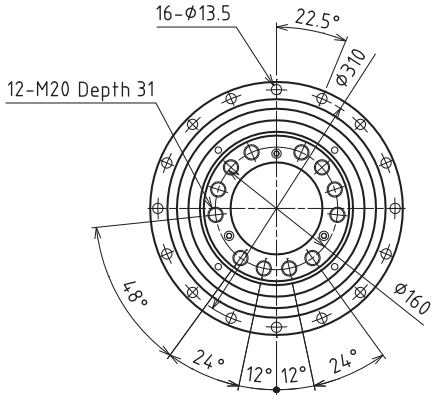

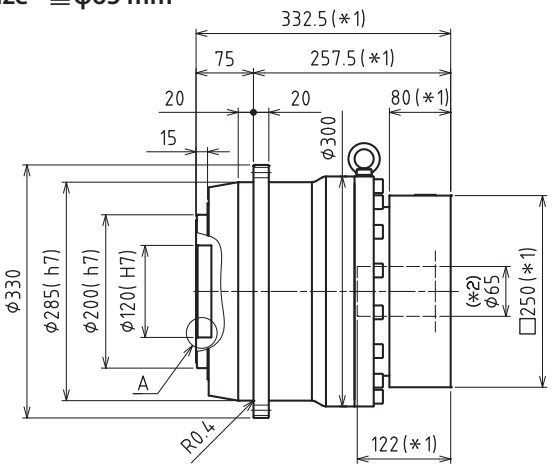

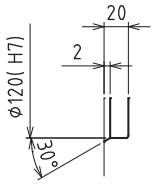

Enlarged detail A

*1) Length will vary depending on motor

*2) Bushing will be inserted to adapt to motor shaft

VRT 285 2-Stage Dimensions

Input bore size ≦φ48 mm

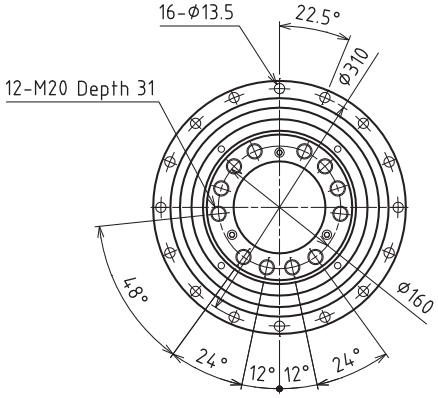

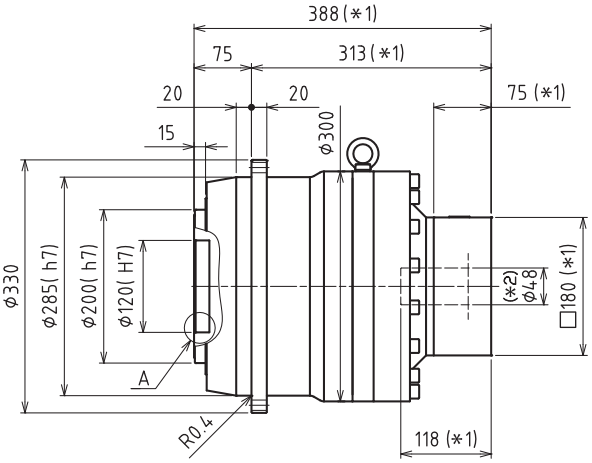

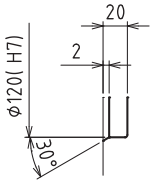

Enlarged detail A

*1) Length will vary depending on motor

*2) Bushing will be inserted to adapt to motor shaft

NEV SERIES

The NEV right angle gearbox is the ideal solution for servo or stepper applications running primarily in one direction. With 30 arc-minute backlash, the NEV is an excellent cost-effective, compact choice for applications such as conveyors, where positioning is not as critical. The NEV is often used in situations where our customers upgrade induction duty motors to servos. The price point of this product helps OEMs control costs, especially when updating several axes on one machine. The performance, efficiency and footprint of the NEV allows it to outperform helical bevel or worm gearboxes in a similar class.

The NEV has a lightweight aluminum frame with either a hollow or solid output shaft configuration. It can handle motors ranging between 50w and 3.5kW, achieving nominal output torque ratings ranging between 6 Nm to 90 Nm. Four frame sizes and ratios between 5:1 and 105:1 are available, as well as various wash down options, making this product ideal for applications in food & beverage.

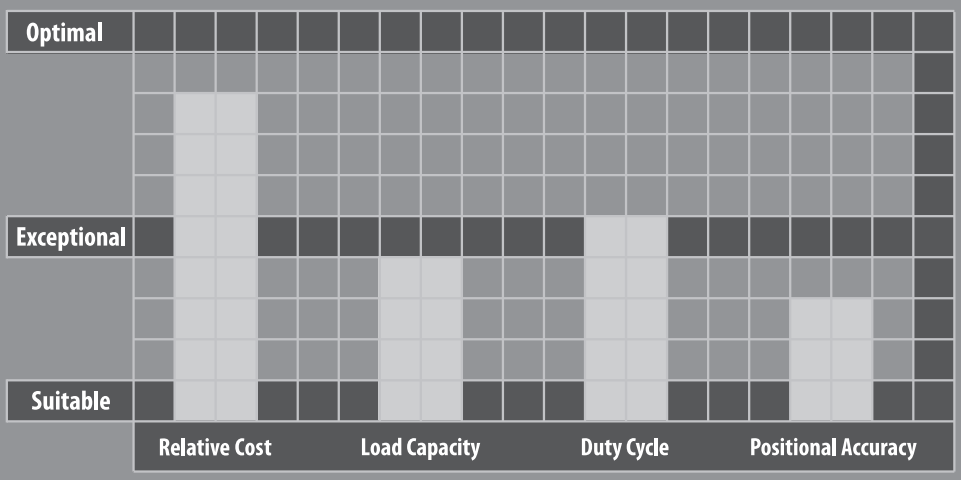

NEV SERIES

- Hollow output shaft option gives machine builders a very compact foot print
- Value engineered solution for simple servo and stepper motor applications
- Quiet operation: Helical cut gears contribute to reduced vibration and noise
- Wide range of mounting adapters offer a simple, precise attachment to any motor
- Lightweight aluminum body reduces excess weight
- Aluminum body, combined with other wash-down features can be used in harsh environments
- Maintenance-free solution that is lubricated for life. High performance grease allows flexible mounting in any orientation

NEV Series Features

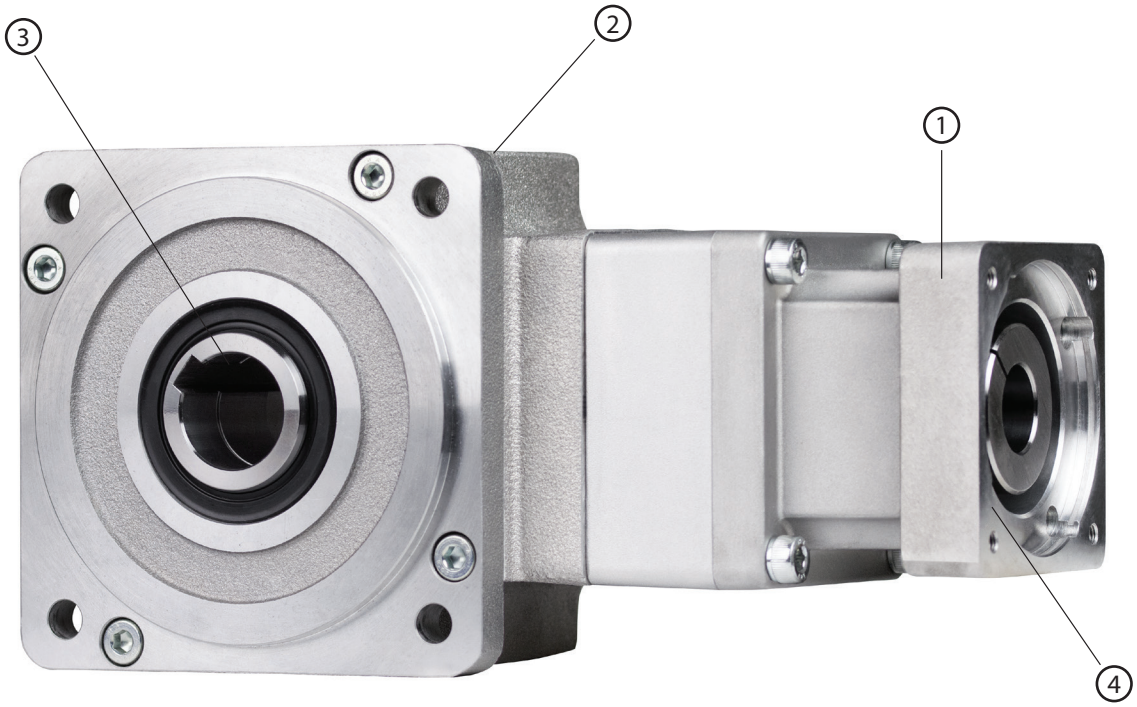

1. Motor adapter allows for flexible mounting to any motor manufacturer
2. Lightweight aluminum body, an excellent fit for washdown applications
3. Hollow or solid output shaft options
4. Input seal provides IP65 protection against the elements

NEV Series Model Code

NEVSF	–	27	C	–	K	–	14CA11

- 14CA11 — Motor Mounting Code (*1)
- K — Output Mounting Style: K: Keyed Solid Shaft; H: Keyed Hollow Shaft
- C — Frame size: B, C, D, E
- 27 — Ratio: 2-Stage: 5, 9, 15, 27; 3-Stage: 45, 75, 105
- NEVSF — Series

*1) Contact us for washdown, food grade or other modifications

NEV B-Frame 2-Stage Specifications

Frame Size	**B (78mm)**					
Ratio	Units	Note	5	9	15	27
Nominal Output Torque	[Nm]	--	6	6	10	10
Maximum Acceleration Torque	[Nm]	--	20	20	30	30
Emergency Stop Torque	[Nm]	--	35	40	50	50
Nominal Input Speed	[rpm]	--	3000			
Maximum Input Speed	[rpm]	--	6000			
No Load Running Torque	[Nm]	--	0.18			
Permitted Radial Load	[N]	--	1000	1200	1500	1800
Permitted Axial Load	[N]	--	500	600	750	900
Moment of Inertia (≤Ø 8)	[kgcm2]	--	--	--	--	--
Moment of Inertia (≤ Ø14)	[kgcm2]	--	0.275	0.110	0.059	0.146
Efficiency	[%]	--	85			
Torsional Rigidity	[Nm/arcmin]	--	0.4			
Maximum Torsional Backlash	[Arc-min]	--	≤ 30			
Noise Level	[dB]	--	≤ 73			
Protection Class	--	--	IP65			
Ambient Temperature	[°C]	--	0-40			
Permitted Housing Temperature	[°C]	--	90			
Weight (Solid Output Shaft)	[kg]	--	3.8			
Weight (Hollow Output Shaft)	[kg]	--	3.6			

NEV B-Frame (78mm) 2-Stage Dimensions – Ratios: 5:1, 9:1, 15:1, 27:1

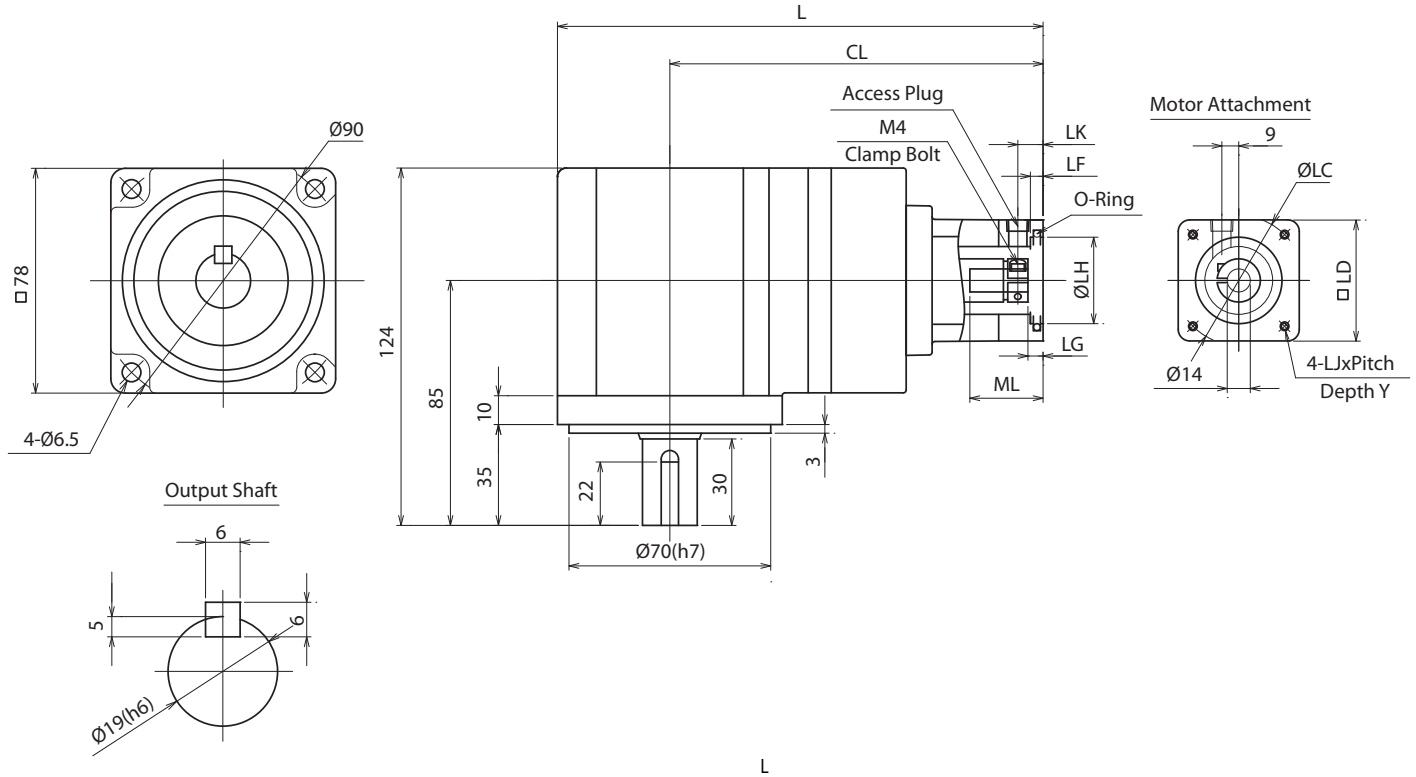

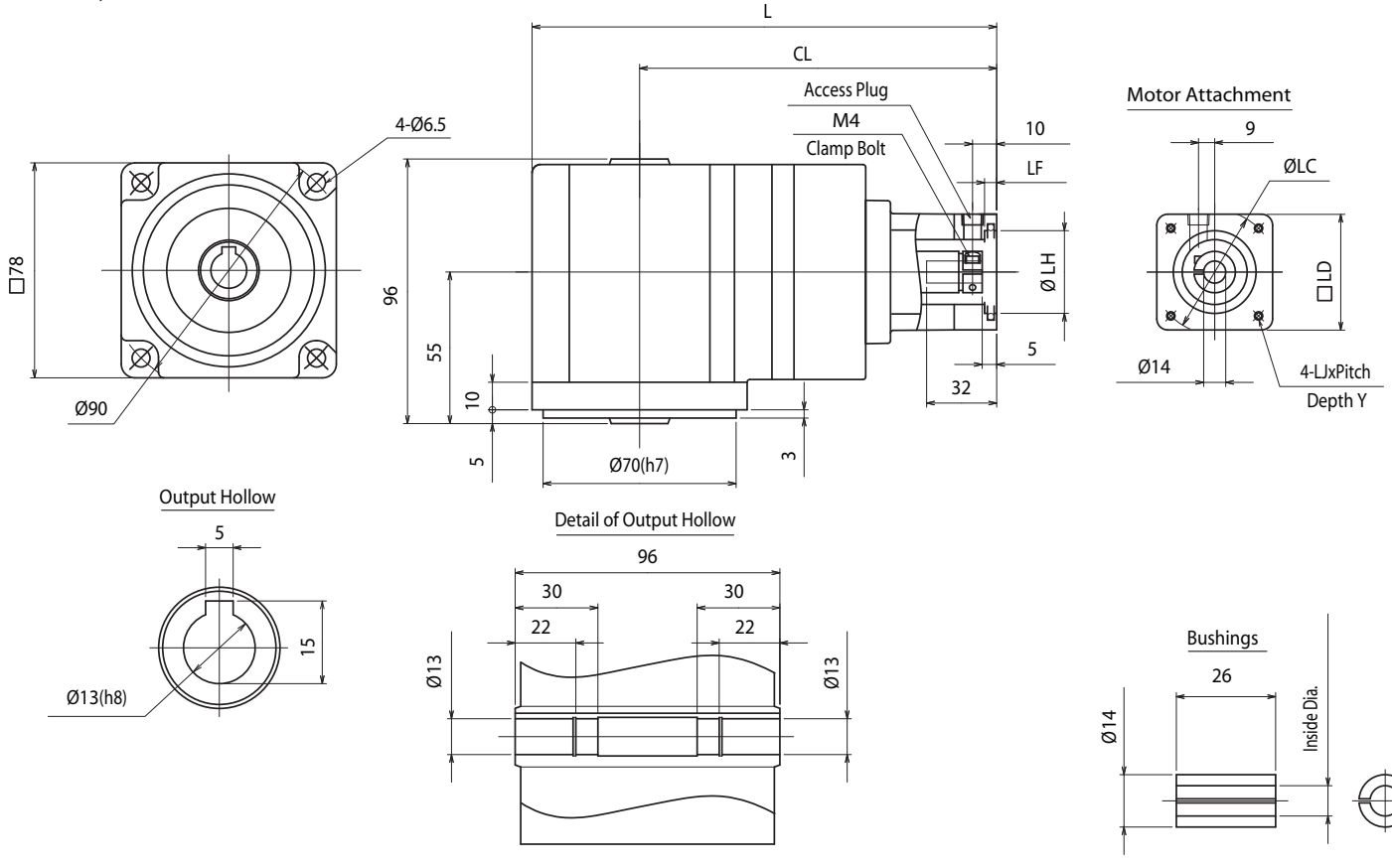

NEV

NEV B-Frame 3-Stage Specifications

Frame Size	**B (78mm)**				
Ratio	Units	Note	45	75	105
Nominal Output Torque	[Nm]	--	10	15	15
Maximum Acceleration Torque	[Nm]	--	30	30	30
Emergency Stop Torque	[Nm]	--	50	50	50
Nominal Input Speed	[rpm]	--	3000		
Maximum Input Speed	[rpm]	--	6000		
No Load Running Torque	[Nm]	--	0.109		
Permitted Radial Load	[N]	--	1800	1800	1800
Permitted Axial Load	[N]	--	900	900	900
Moment of Inertia (≤Ø 8)	[kgcm2]	--	0.091	0.083	0.078
Moment of Inertia (≤ Ø14)	[kgcm2]	--	--	--	--
Efficiency	[%]	--	80		
Torsional Rigidity	[Nm/arcmin]	--	0.4		
Maximum Torsional Backlash	[Arc-min]	--	≤ 30		
Noise Level	[dB]	--	≤ 63		
Protection Class	--	--	IP65		
Ambient Temperature	[°C]	--	0-40		
Permitted Housing Temperature	[°C]	--	90		
Weight (Solid Output Shaft)	[kg]	--	3.9		
Weight (Hollow Output Shaft)	[kg]	--	3.7		

NEV B-Frame (78mm) 3-Stage Dimensions – Ratios: 45:1, 75:1, 105:1

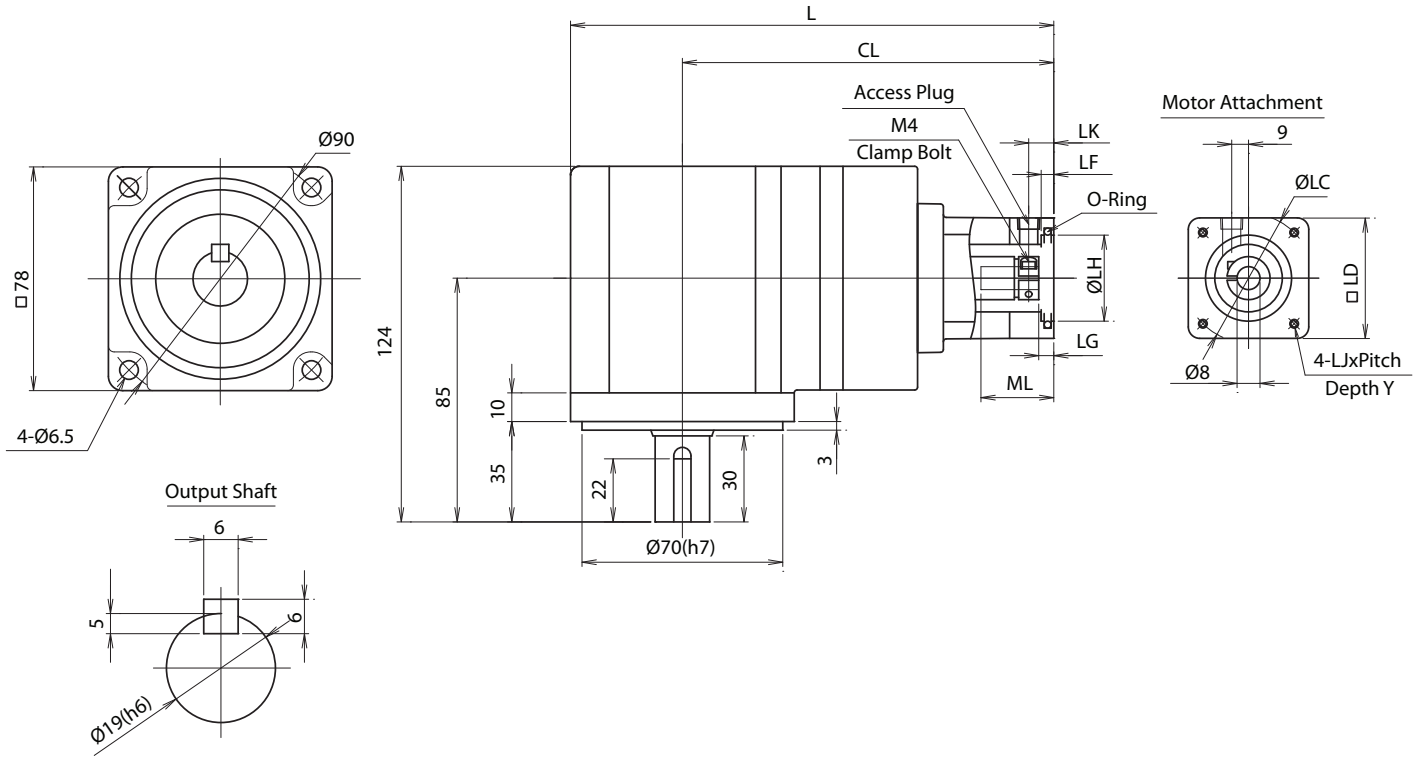

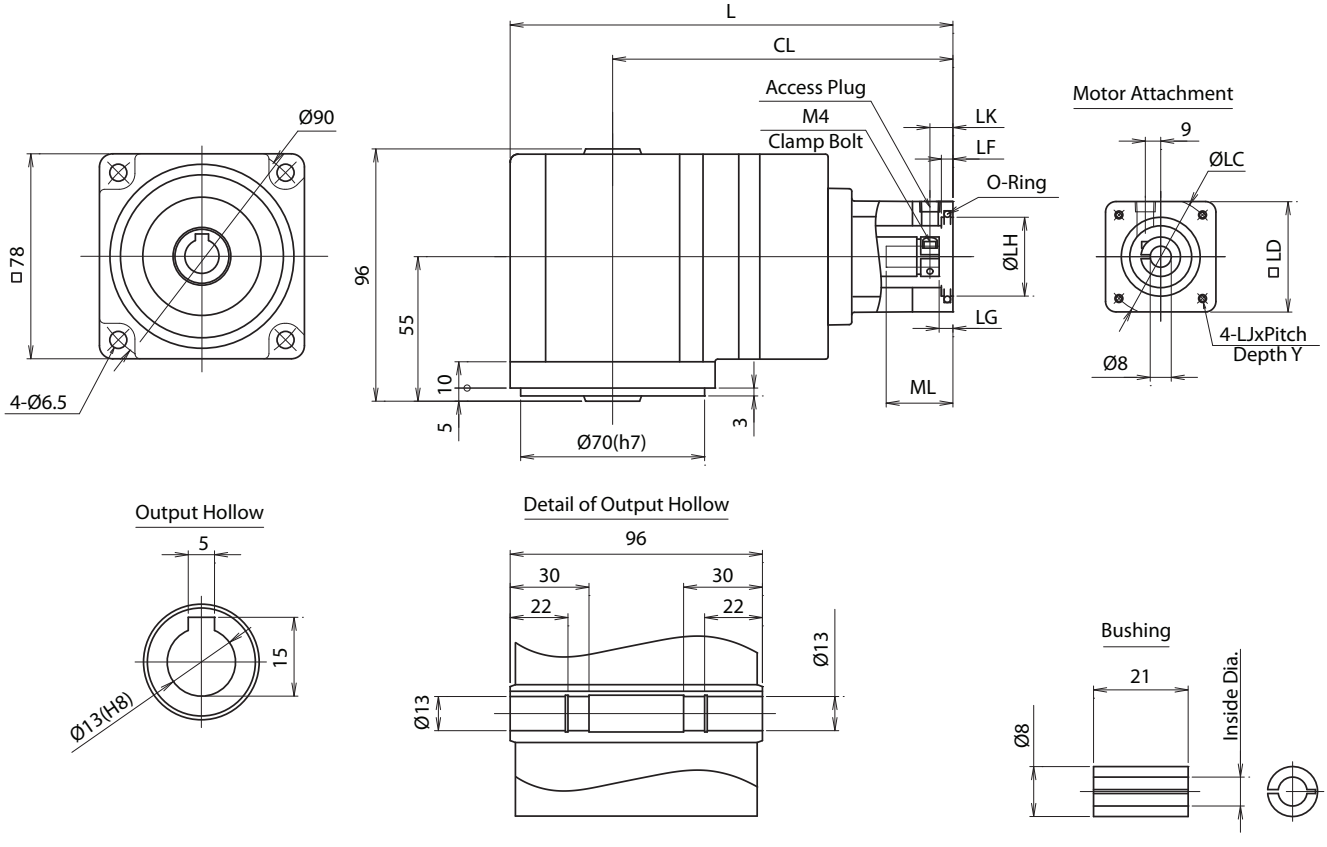

NEV C-Frame 2-Stage Specifications

Frame Size	**C (90mm)**					
Ratio	Units	Note	5	9	15	27
Nominal Output Torque	[Nm]	--	15	20	20	30
Maximum Acceleration Torque	[Nm]	--	30	35	40	40
Emergency Stop Torque	[Nm]	--	50	50	60	75
Nominal Input Speed	[rpm]	--	3000			
Maximum Input Speed	[rpm]	--	6000			
No Load Running Torque	[Nm]	--	0.3			
Permitted Radial Load	[N]	--	1000	1500	1800	1800
Permitted Axial Load	[N]	--	500	750	900	900
Moment of Inertia (≤Ø14)	[kgcm2]	--	--	--	--	--
Moment of Inertia (≤ Ø19)	[kgcm2]	--	0.806	0.744	0.415	0.585
Efficiency	[%]	--	85			
Torsional Rigidity	[Nm/arcmin]	--	1.0			
Maximum Torsional Backlash	[Arc-min]	--	≤ 30			
Noise Level	[dB]	--	≤ 73			
Protection Class	--	--	IP65			
Ambient Temperature	[°C]	--	0-40			
Permitted Housing Temperature	[°C]	--	90			
Weight (Solid Output Shaft)	[kg]	--	4.1			
Weight (Hollow Output Shaft)	[kg]	--	4.0			

NEV C-Frame (90mm) 2-Stage Dimensions – Ratios: 5:1, 9:1, 15:1, 27:1

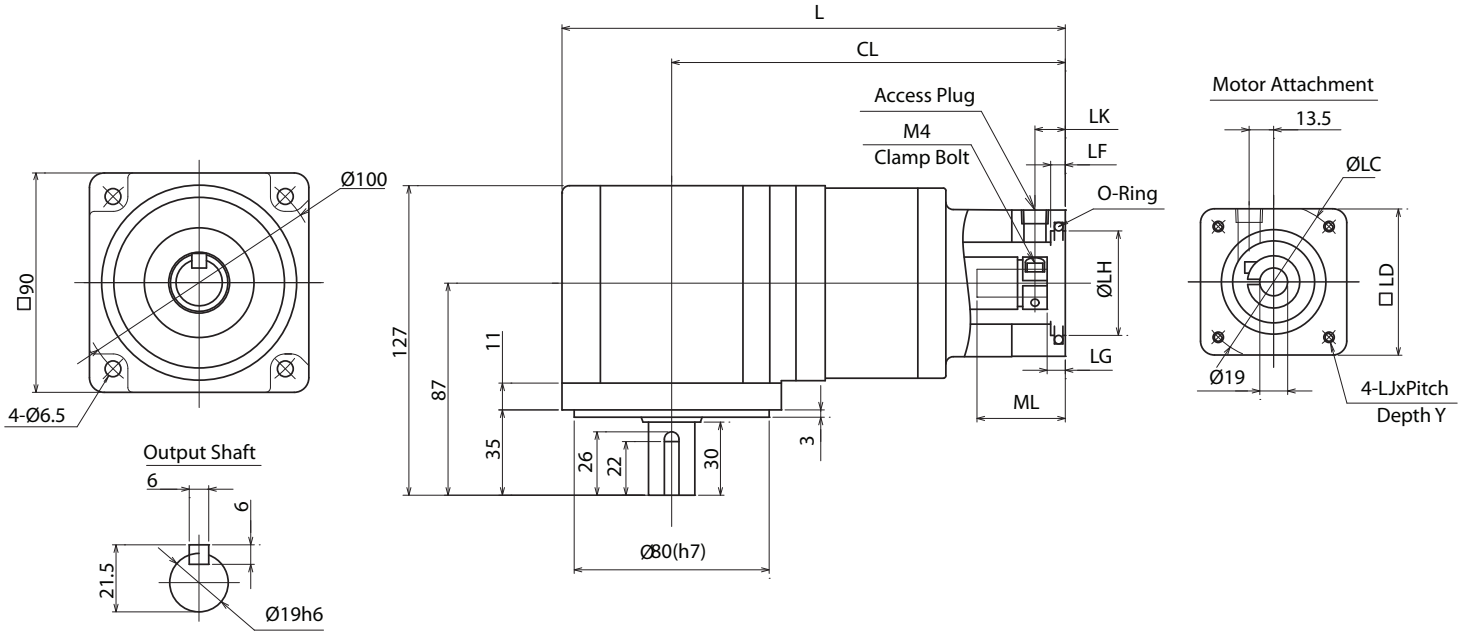

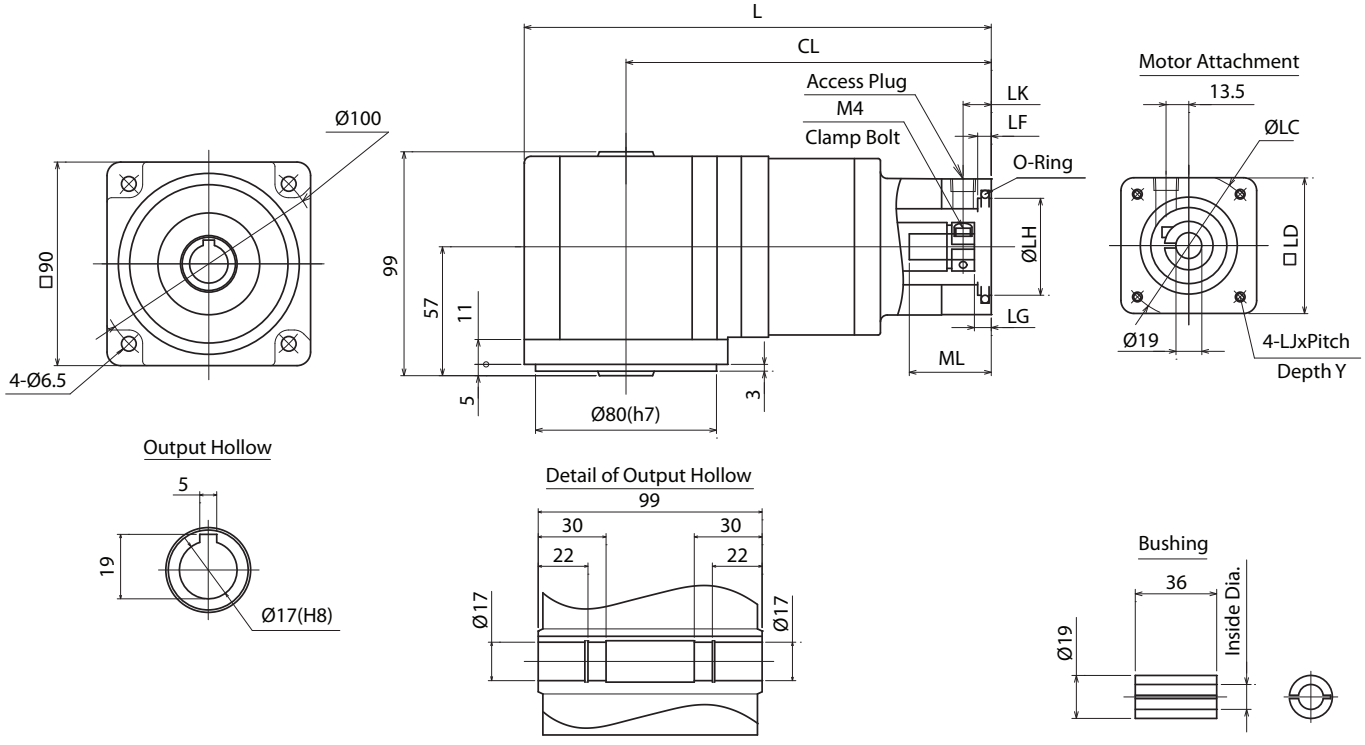

NEV

NEV C-Frame 3-Stage Specifications

Frame Size	**C (90mm)**				
Ratio	Units	Note	45	75	105
Nominal Output Torque	[Nm]	--	30	30	30
Maximum Acceleration Torque	[Nm]	--	40	40	40
Emergency Stop Torque	[Nm]	--	75	75	75
Nominal Input Speed	[rpm]	--	3000		
Maximum Input Speed	[rpm]	--	6000		
No Load Running Torque	[Nm]	--	0.205		
Permitted Radial Load	[N]	--	1800	1800	1800
Permitted Axial Load	[N]	--	900	900	900
Moment of Inertia (≤Ø14)	[kgcm2]	--	0.794	0.690	0.590
Moment of Inertia (≤ Ø19)	[kgcm2]	--	--	--	--
Efficiency	[%]	--	80		
Torsional Rigidity	[Nm/arcmin]	--	1.0		
Maximum Torsional Backlash	[Arc-min]	--	≤ 30		
Noise Level	[dB]	--	≤ 63		
Protection Class	--	--	IP65		
Ambient Temperature	[°C]	--	0-40		
Permitted Housing Temperature	[°C]	--	90		
Weight (Solid Output Shaft)	[kg]	--	4.3		
Weight (Hollow Output Shaft)	[kg]	--	4.2		

NEV C-Frame (90mm) 3-Stage Dimensions – Ratios: 45:1, 75:1, 105:1

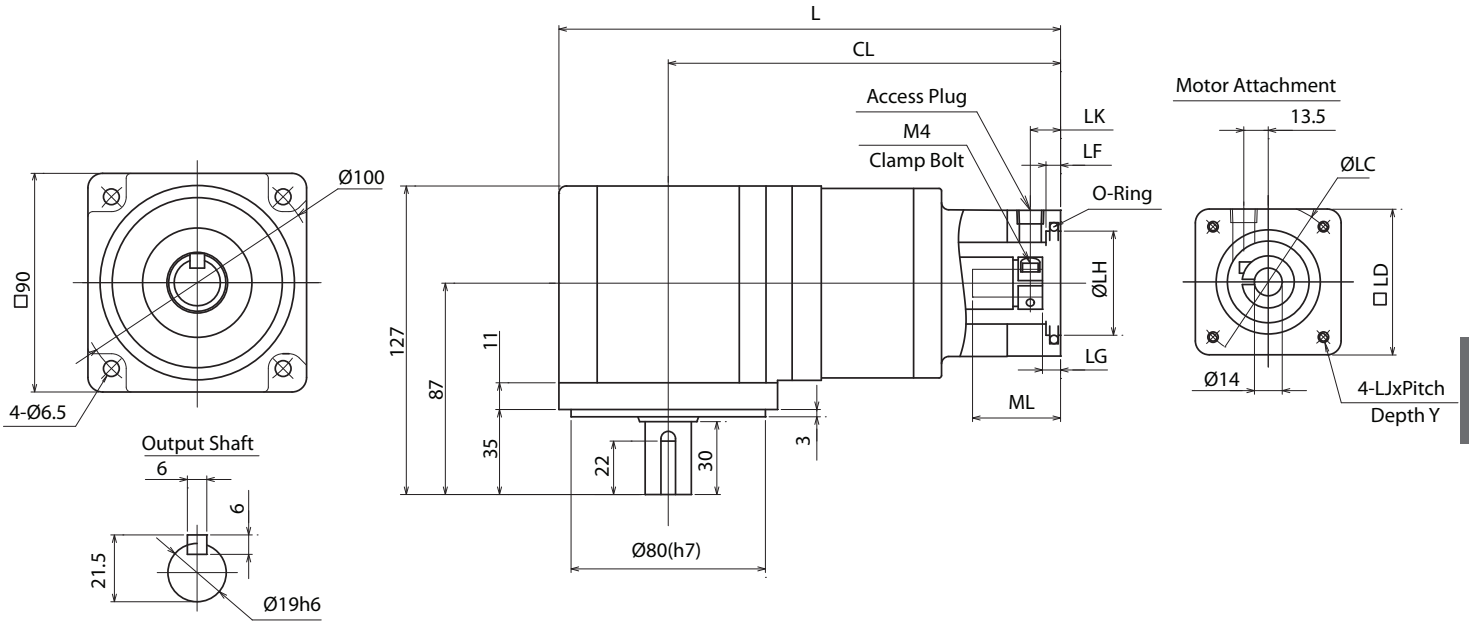

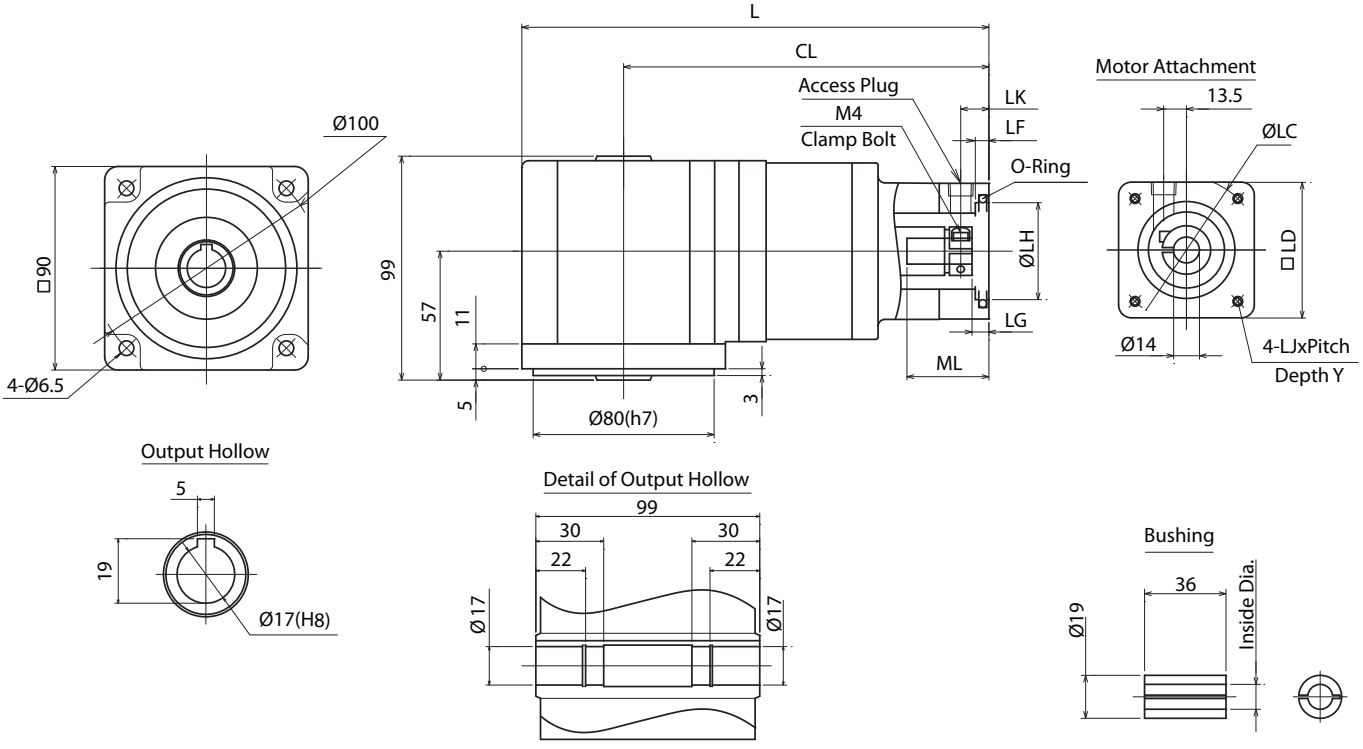

NEV

NEV D-Frame 2-Stage Specifications

Frame Size	**D (115mm)**					
Ratio	Units	Note	5	9	15	27
Nominal Output Torque	[Nm]	--	25	25	25	40
Maximum Acceleration Torque	[Nm]	--	55	75	75	80
Emergency Stop Torque	[Nm]	--	100	140	140	180
Nominal Input Speed	[rpm]	--	3000			
Maximum Input Speed	[rpm]	--	6000			
No Load Running Torque	[Nm]	--	0.45			
Permitted Radial Load	[N]	--	2200	2200	2600	2600
Permitted Axial Load	[N]	--	1100	1100	1300	1300
Moment of Inertia (≤Ø14)	[kgcm2]	--	--	--	--	--
Moment of Inertia (≤ Ø19)	[kgcm2]	--	1.502	1.254	0.464	0.720
Efficiency	[%]	--	85			
Torsional Rigidity	[Nm/arcmin]	--	1.2	1.5	1.5	1.5
Maximum Torsional Backlash	[Arc-min]	--	≤ 30			
Noise Level	[dB]	--	≤ 73			
Protection Class	--	--	IP65			
Ambient Temperature	[°C]	--	0-40			
Permitted Housing Temperature	[°C]	--	90			
Weight (Solid Output Shaft)	[kg]	--	7.1			
Weight (Hollow Output Shaft)	[kg]	--	6.7			

NEV D-Frame (115mm) 2-Stage Dimensions – Ratios: 5:1, 9:1, 15:1, 27:1

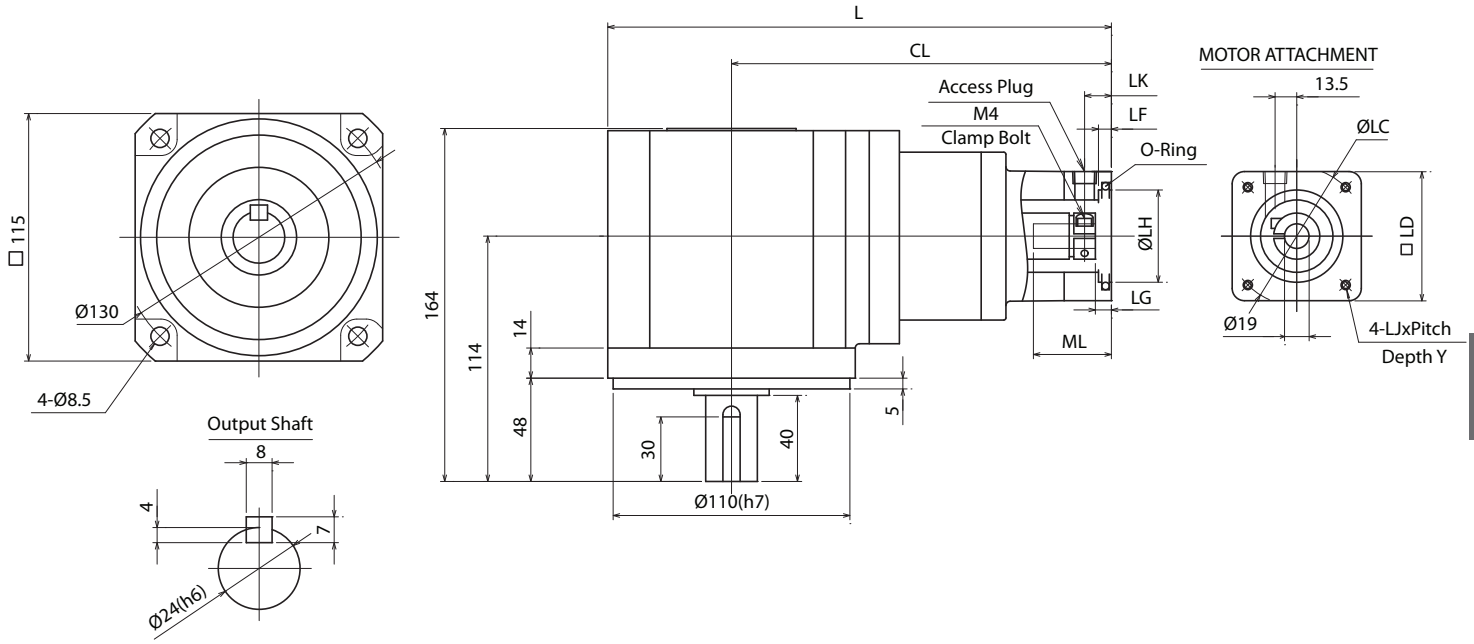

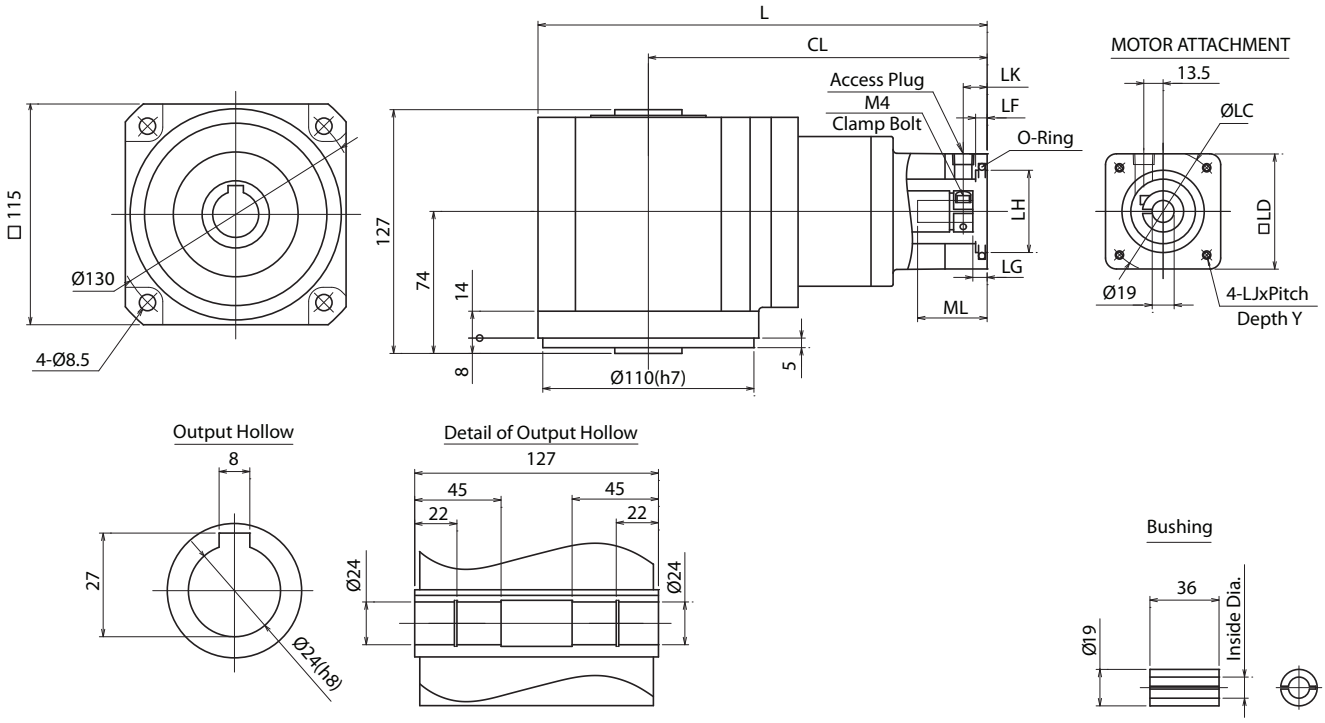

NEV

NEV D-Frame 3-Stage Specifications

Frame Size	**D (115mm)**				
Ratio	Units	Note	45	75	105
Nominal Output Torque	[Nm]	--	45	50	50
Maximum Acceleration Torque	[Nm]	--	80	80	80
Emergency Stop Torque	[Nm]	--	180	180	180
Nominal Input Speed	[rpm]	--	3000		
Maximum Input Speed	[rpm]	--	6000		
No Load Running Torque	[Nm]	--	0.355		
Permitted Radial Load	[N]	--	2600	2600	2600
Permitted Axial Load	[N]	--	1300	1300	1300
Moment of Inertia (≤Ø14)	[kgcm2]	--	0.806	0.694	0.648
Moment of Inertia (≤ Ø19)	[kgcm2]	--	--	--	--
Efficiency	[%]	--	80		
Torsional Rigidity	[Nm/arcmin]	--	1.5		
Maximum Torsional Backlash	[Arc-min]	--	≤ 30		
Noise Level	[dB]	--	≤ 67		
Protection Class	--	--	IP65		
Ambient Temperature	[°C]	--	0-40		
Permitted Housing Temperature	[°C]	--	90		
Weight (Solid Output Shaft)	[kg]	--	7.3		
Weight (Hollow Output Shaft)	[kg]	--	6.9		

NEV D-Frame (115mm) 3-Stage Dimensions – Ratios: 45:1, 75:1, 105:1

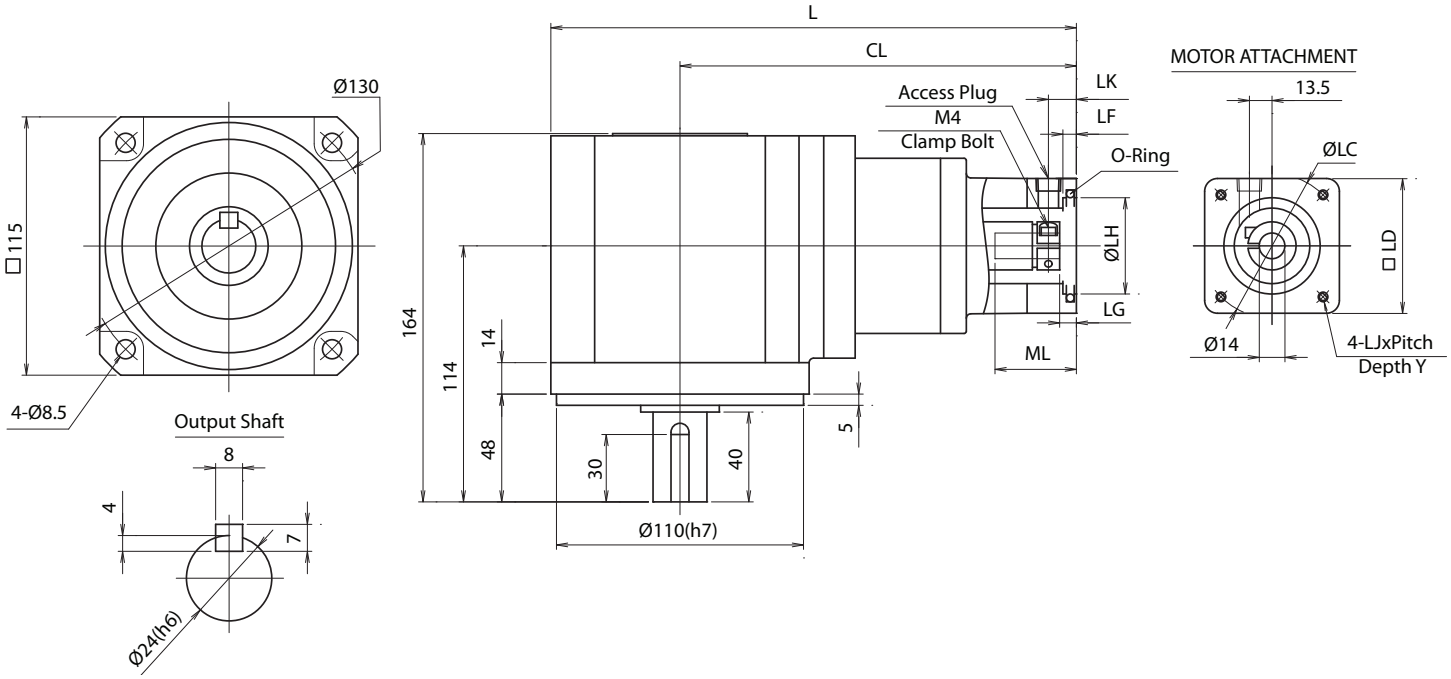

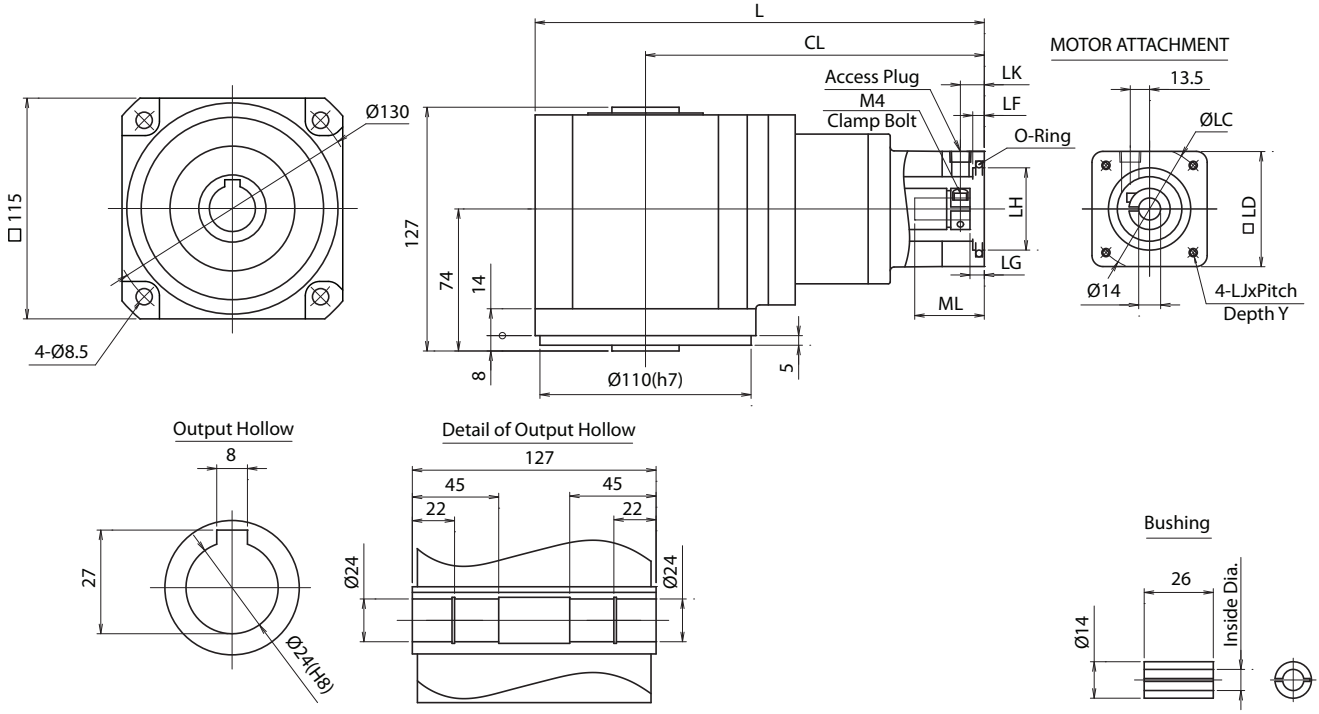

NEV

NEV E-Frame 2-Stage Specifications

Frame Size	**E (145mm)**					
Ratio	Units	Note	5	9	15	27
Nominal Output Torque	[Nm]	--	50	50	55	60
Maximum Acceleration Torque	[Nm]	--	100	140	140	180
Emergency Stop Torque	[Nm]	--	250	250	250	300
Nominal Input Speed	[rpm]	--	3000			
Maximum Input Speed	[rpm]	--	6000			
No Load Running Torque	[Nm]	--	1.21			
Permitted Radial Load	[N]	--	3000	3000	3000	4000
Permitted Axial Load	[N]	--	1500	1500	1500	2000
Moment of Inertia (≤Ø19)	[kgcm2]	--	--	--	--	--
Moment of Inertia (≤ Ø24)	[kgcm2]	--	3.559	2.940	1.193	2.044
Efficiency	[%]	--	85			
Torsional Rigidity	[Nm/arcmin]	--	3.2	4.0	4.0	4.0
Maximum Torsional Backlash	[Arc-min]	--	≤ 30			
Noise Level	[dB]	--	≤ 74			
Protection Class	--	--	IP65			
Ambient Temperature	[°C]	--	0-40			
Permitted Housing Temperature	[°C]	--	90			
Weight (Solid Output Shaft)	[kg]	--	11.0			
Weight (Hollow Output Shaft)	[kg]	--	10.0			

NEV E-Frame (145mm) 2-Stage Dimensions – Ratios: 5:1, 9:1, 15:1, 27:1

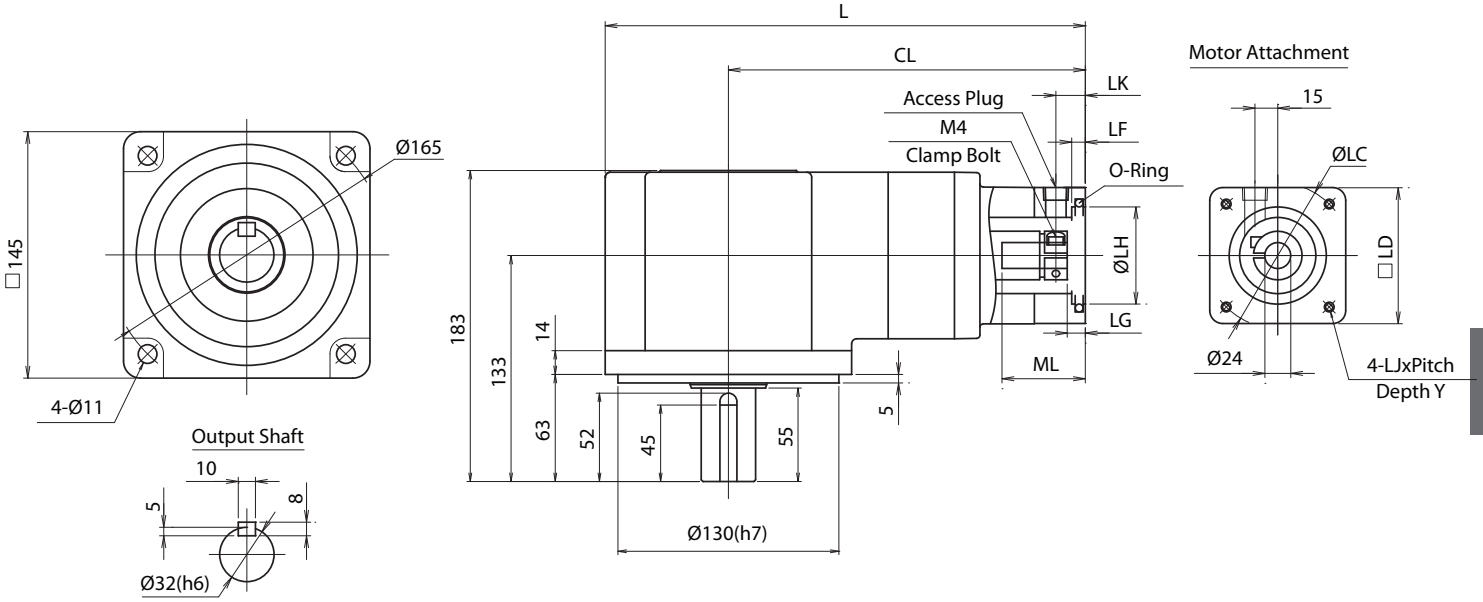

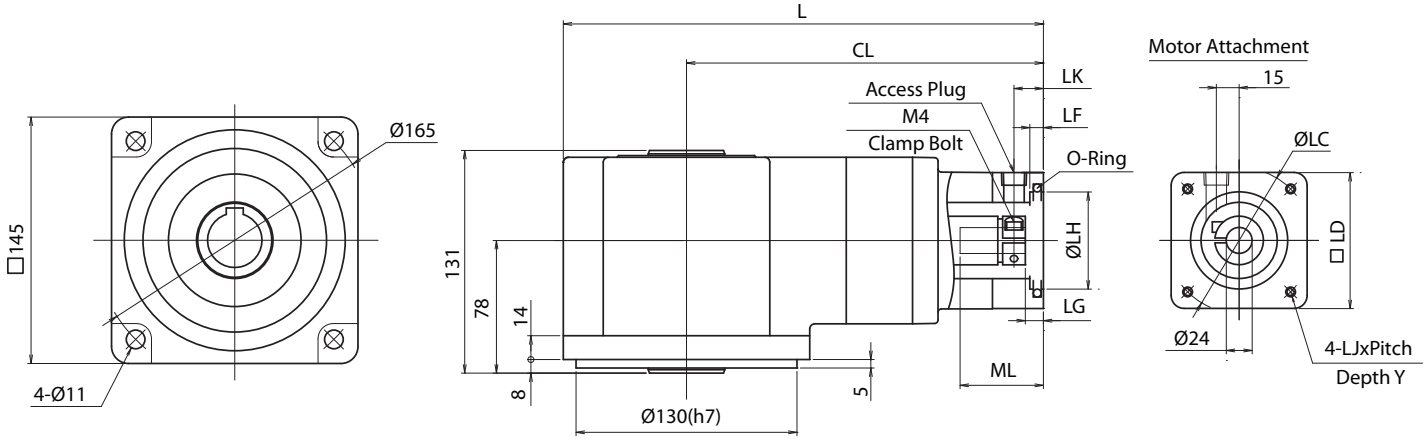

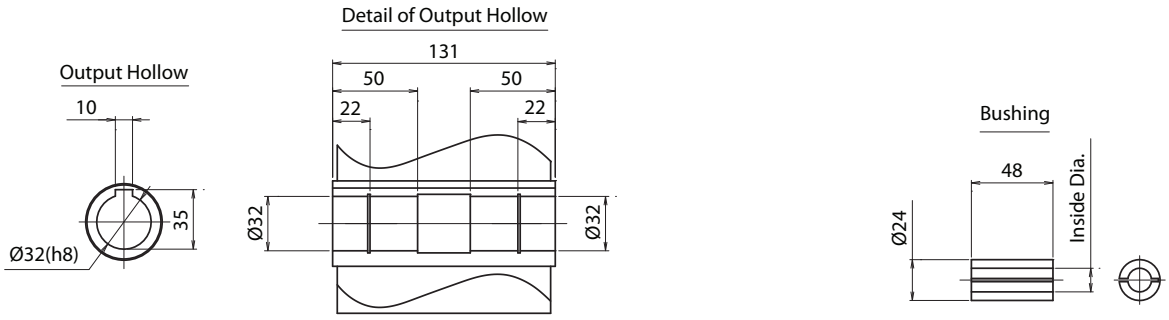

NEV

NEV E-Frame 3-Stage Specifications

Frame Size	**E (145mm)**				
Ratio	Units	Note	45	75	105
Nominal Output Torque	[Nm]	--	80	90	90
Maximum Acceleration Torque	[Nm]	--	180	180	180
Emergency Stop Torque	[Nm]	--	300	300	300
Nominal Input Speed	[rpm]	--	3000		
Maximum Input Speed	[rpm]	--	6000		
No Load Running Torque	[Nm]	--	0.961		
Permitted Radial Load	[N]	--	4000	4000	4000
Permitted Axial Load	[N]	--	2000	2000	2000
Moment of Inertia (≤Ø19)	[kgcm2]	--	1.878	1.303	1.184
Moment of Inertia (≤ Ø24)	[kgcm2]	--	--	--	--
Efficiency	[%]	--	80		
Torsional Rigidity	[Nm/arcmin]	--	4.0		
Maximum Torsional Backlash	[Arc-min]	--	≤ 30		
Noise Level	[dB]	--	≤ 69		
Protection Class	--	--	IP65		
Ambient Temperature	[°C]	--	0-40		
Permitted Housing Temperature	[°C]	--	90		
Weight (Solid Output Shaft)	[kg]	--	11.4		
Weight (Hollow Output Shaft)	[kg]	--	10.4		

NEV E-Frame (145mm) 3-Stage Dimensions – Ratios: 45:1, 75:1, 105:1

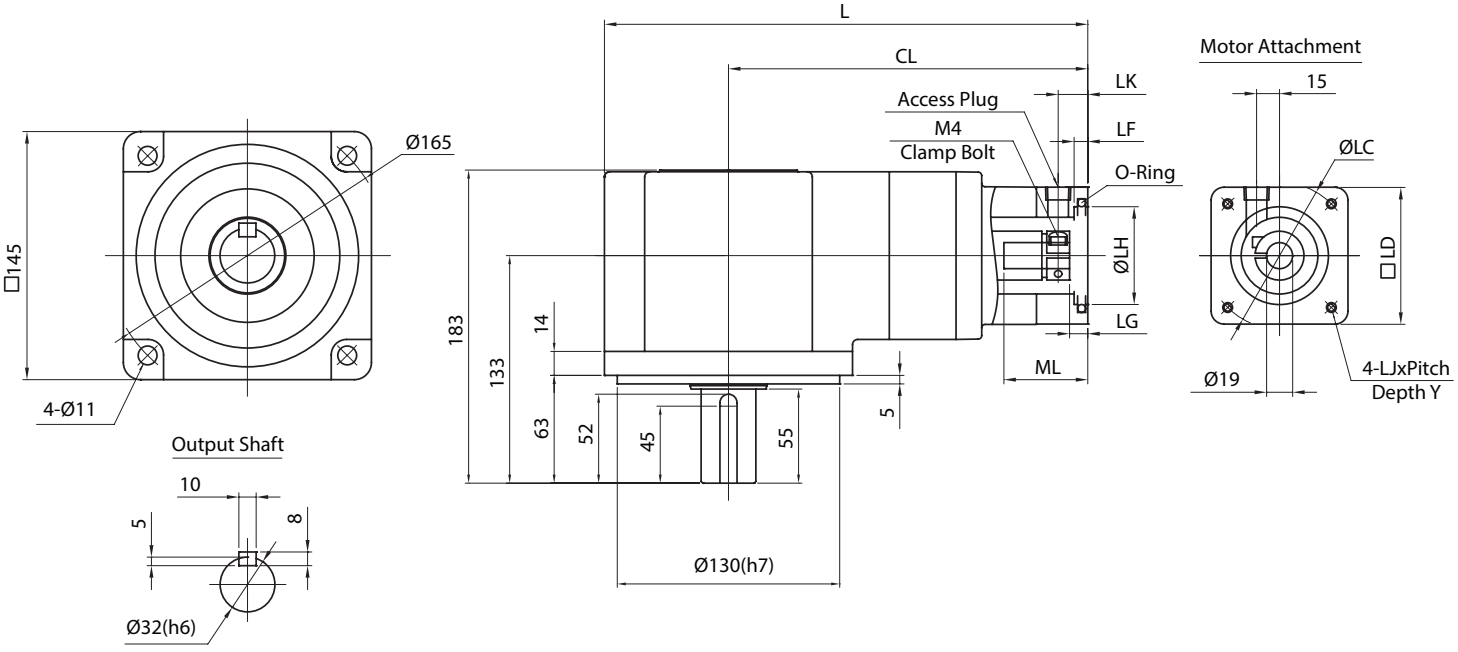

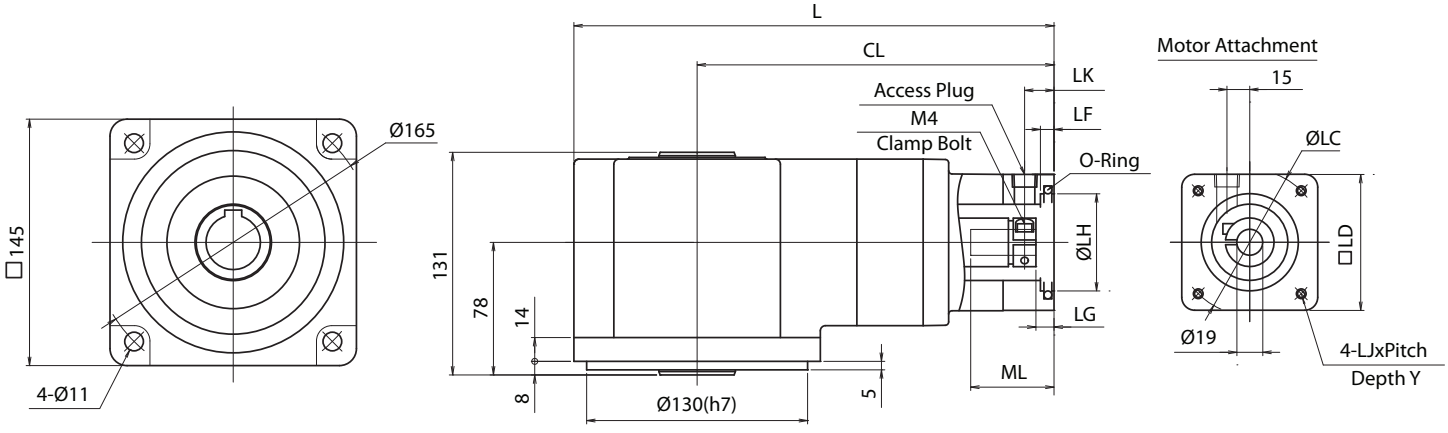

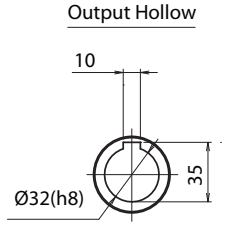

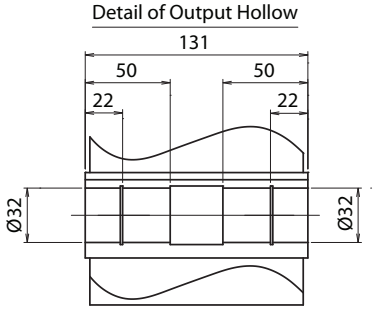

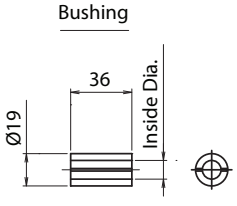

NEV

EVL SERIES

The right angle equivalent to the VRL series, the EVL provides our customers with an excellent solution when space and clearance are a serious limitation. Helical planetary gears team up with spiral bevel gears to provide a product with robust internal construction, smooth operation and high torque density. 6 arc-min backlash allows the VRL to be applied to a wide range of applications where accuracy and dynamics are in play, but cost is of concern.

The EVL is a solid choice for servo applications in packaging, handling and automation systems. A variety of standard wash down and food grade options are available, making it an attractive option for the toughest environments. We offer the broadest selection of frame sizes and ratios, giving our customers more flexibility than ever before. Industry standard mounting dimensions allow the EVL to be implemented in legacy machine designs, saving our customers valuable time.

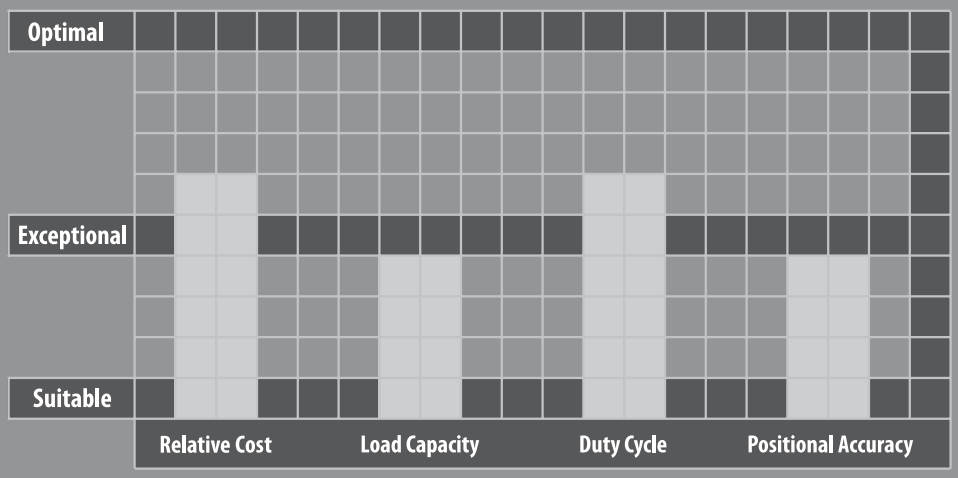

EVL SERIES

- Compact, space-saving solution for mid to high end motion control applications
- The widest range of frame sizes and ratios available in the market
- Best-In-class backlash (≤6 arc-min)
- Broad range of mounting adapters offer a simple, precise attachment to any motor
- Maintenance-free solution that is lubricated for life. High performance grease allows flexible mounting in any orientation
- Industry standard mounting dimensions
- Assembled in the USA

EVL Series Features

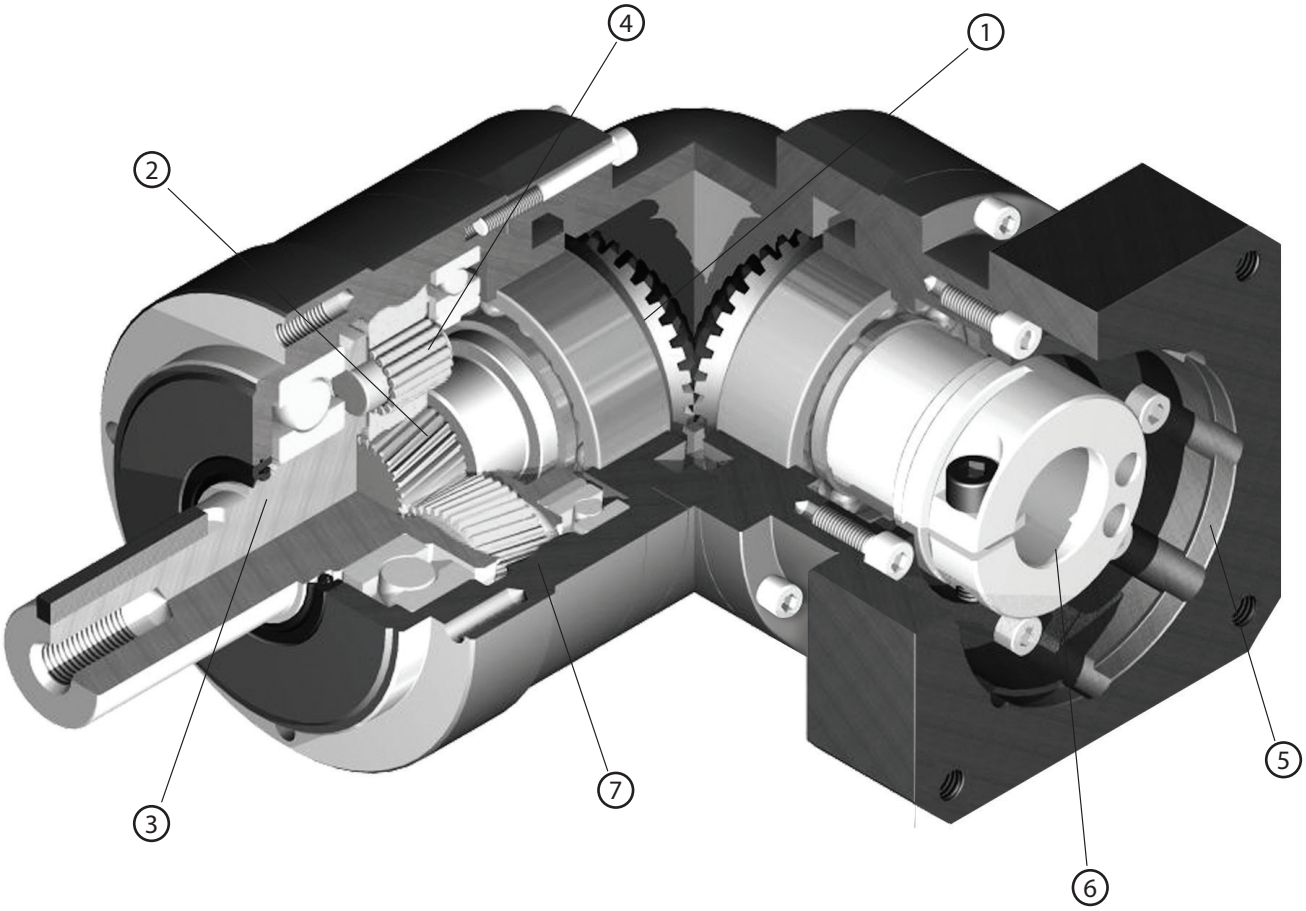

1. Right angle bevel gear configuration allows motor to be mounted at a 90 degree position from the gearbox, saving space
2. Carburized helical gears with proprietary secondary finishing process for higher accuracy and smooth, quiet operation. 40% higher tooth surface area than the industry standard
3. One piece output shaft and planet carrier with two bearings straddling the planet gears. Higher stiffness, torque capacity and safety factor, with guaranteed alignment of gearing
4. Uncaged needle roller bearings provide excellent torque density and torsional rigidity. 43% larger bearing surface area compared to the rest of the industry
5. Optimized mounting system with active centering on motor pilot diameter guarantees alignment of motor. Motor can be installed in any orientation
6. True concentric motor shaft clamping connection, optimized for your specific motor. Reduced inertia for dynamic performance and balanced for high speed operation
7. Ring gear machined directly into the housing, not welded or pressed in. Provides greater concentricity and elimination of speed fluctuation

EVL Series Model Code

EVL – 090 B – 7 – K 6 – 19HB16

- **19HB16** — Motor mounting code (*1)
- **6** — Backlash: 070, 090, 120, 155 ≤6–9 arc–min; 205, 235 ≤8–11 arc–min
- **K** — Output mounting style: K: Keyed shaft; S: Smooth shaft
- **7** — Ratio: 2-Stage: 3, 4, 5, 6, 7, 8, 9, 10; 3-Stage: 15, 16, 20, 25, 28, 30, 35, 40, 45, 50, 60, 70, 80, 90, 100
- **B** — Design version
- **090** — Frame size: 070, 090, 120, 155, 205, 235
- **EVL** — Series

*1) Motor mounting code varies depending on the motor. Use the selection tool link below to configure the code.

Contact us for additional information or refer to our online gearbox selection tool.

Selection tool https://www.nidec-drivetechnology.co.jp/selection/all/

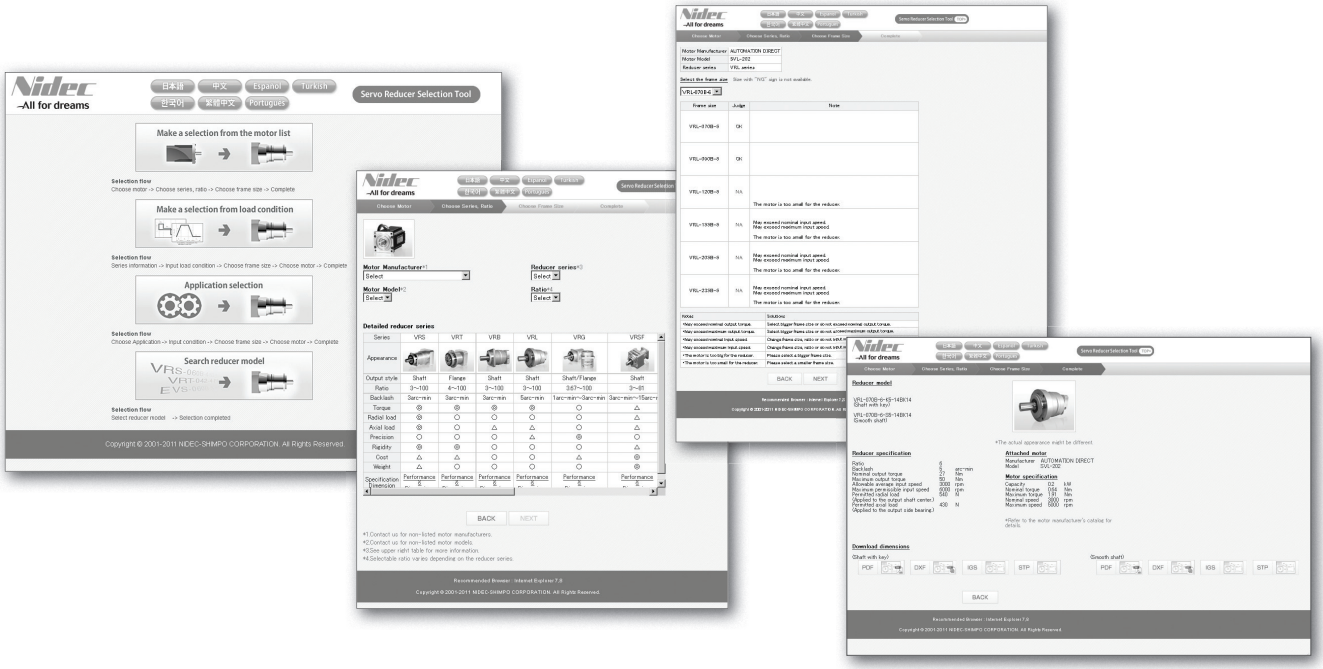

EVL 070 2-Stage Specifications

Frame Size			**070**							
Ratio	Unit	Note	3	4	5	6	7	8	9	10
Nominal Output Torque	[Nm]	*1	12	16	22	24	24	24	19	19
Maximum Acceleration Torque	[Nm]	*2	29	38	48	54	54	54	38	38
Maximum Torque	[Nm]	*3	33	45	56	63	63	61	45	45
Emergency Stop Torque	[Nm]	*4	50	65	80	90	90	90	65	65
Nominal Input Speed	[rpm]	*5	3300							
Maximum Input Speed	[rpm]	*6	6000							
No Load Running Torque	[Nm]	*7	0.33							
Maximum Radial Load	[N]	*8	1200							
Maximum Axial Load	[N]	*9	1100							
Moment of Inertia (≤ Ø 8)	[kgcm2]	--	0.31	0.27	0.25	0.24	0.23	0.23	0.23	0.23
Moment of Inertia (≤ Ø 14)	[kgcm2]	--	0.39	0.34	0.32	0.31	0.31	0.31	0.30	0.30
Moment of Inertia (≤ Ø 19)	[kgcm2]	--	0.58	0.53	0.51	0.50	0.50	0.50	0.49	0.49
Efficiency	[%]	*10	93							
Torsional Rigidity	[Nm/arc-min]	*11	3							
Maximum Torsional Backlash	[arc-min]	--	≤ 6							
Noise Level	dB [A]	*12	≤ 80							
Protection Class	--	*13	IP54 (IP65)							
Ambient Temperature	[°C]	--	0-40							
Permitted Housing Temperature	[°C]	--	90							
Weight	[kg]	*14	1.9							

EVL 070 3-Stage Specifications

Frame Size			**070**							
Ratio	Unit	Note	15	16	20	25	28	30	35	40
Nominal Output Torque	[Nm]	*1	18	26	26	28	28	19	28	28
Maximum Acceleration Torque	[Nm]	*2	38	54	54	54	54	38	54	54
Maximum Torque	[Nm]	*3	38	54	54	54	54	38	54	54
Emergency Stop Torque	[Nm]	*4	65	90	90	90	90	65	90	90
Nominal Input Speed	[rpm]	*5	3800							
Maximum Input Speed	[rpm]	*6	6000							
No Load Running Torque	[Nm]	*7	0.20							
Maximum Radial Load	[N]	*8	1200							
Maximum Axial Load	[N]	*9	1100							
Moment of Inertia (≤ Ø 8)	[kgcm2]	--	0.073	0.079	0.071	0.071	0.077	0.062	0.070	0.061
Moment of Inertia (≤ Ø 14)	[kgcm2]	--	0.118	0.124	0.116	0.115	0.122	0.106	0.115	0.106
Moment of Inertia (≤ Ø 19)	[kgcm2]	--	--	--	--	--	--	--	--	--
Efficiency	[%]	*10	88							
Torsional Rigidity	[Nm/arc-min]	*11	3							
Maximum Torsional Backlash	[arc-min]	--	≤ 9							
Noise Level	dB [A]	*12	≤ 80							
Protection Class	--	*13	IP65							
Ambient Temperature	[°C]	--	0-40							
Permitted Housing Temperature	[°C]	--	90							
Weight	[kg]	*14	1.7							

EVL 070 3-Stage Specifications

Frame Size	**070**								
Ratio	Unit	Note	45	50	60	70	80	90	100
Nominal Output Torque	[Nm]	*1	19	28	28	28	28	19	19
Maximum Acceleration Torque	[Nm]	*2	38	54	54	54	54	38	38
Maximum Torque	[Nm]	*3	38	54	54	54	54	38	38
Emergency Stop Torque	[Nm]	*4	65	90	90	90	90	65	65
Nominal Input Speed	[rpm]	*5	3800						
Maximum Input Speed	[rpm]	*6	6000						
No Load Running Torque	[Nm]	*7	0.20						
Maximum Radial Load	[N]	*8	1200						
Maximum Axial Load	[N]	*9	1100						
Moment of Inertia (≤ Ø 8)	[kgcm2]	--	0.070	0.061	0.061	0.061	0.061	0.061	0.061
Moment of Inertia (≤ Ø 14)	[kgcm2]	--	0.115	0.106	0.106	0.105	0.105	0.105	0.105
Moment of Inertia (≤ Ø 19)	[kgcm2]	--	--	--	--	--	--	--	--
Efficiency	[%]	*10	88						
Torsional Rigidity	[Nm/arc-min]	*11	3						
Maximum Torsional Backlash	[arc-min]	--	≤ 9						
Noise Level	dB [A]	*12	≤ 80						
Protection Class	--	*13	IP54 (IP65)						
Ambient Temperature	[°C]	--	0-40						
Permitted Housing Temperature	[°C]	--	90						
Weight	[kg]	*14	1.7						

*1) At nominal input speed, service life is 20,000 hours

*2) The maximum torque when starting or stopping operation. Apply Cycle Factor $\mathbf{f_0}$, found on page 468, for higher duty cycle applications

*3) Permitted 10,000 times during service life. Based on 10% of maximum radial load and smooth output shaft

*4) The maximum torque allowed under a stress situation. Permitted 1,000 times during service life

*5) The average input speed at nominal input torque. Maintain housing temperature below permitted value

*6) The maximum intermittent input speed

*7) Torque at no load applied to the input shaft at nominal input speed

*8) The maximum radial load that the gearbox can accept

*9) The maximum axial load that the gearbox can accept

*10) The efficiency at the nominal output torque rating

*11) This does not include lost motion

*12) Contact Nidec Drive Technology for the testing conditions and environment

*13) Various wash-down options are available. Contact Nidec Drive Technology for more details

*14) Weight may vary slightly between models

EVL 070 2-Stage Dimensions

Input bore size ≦φ8 mm

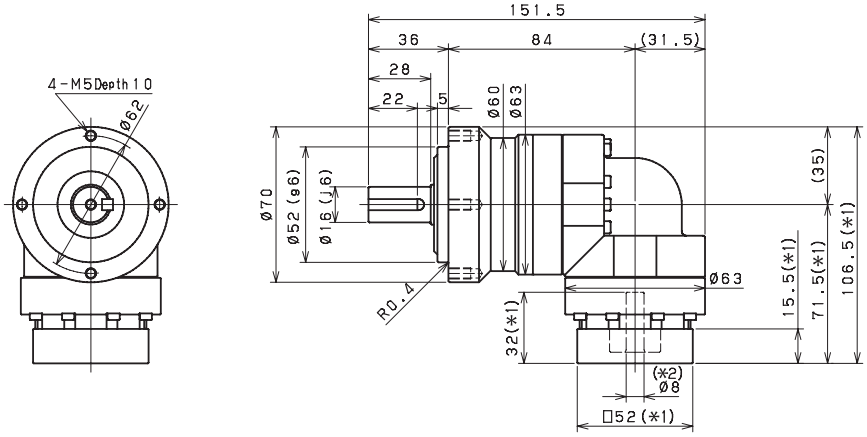

Input bore size ≦φ14 mm

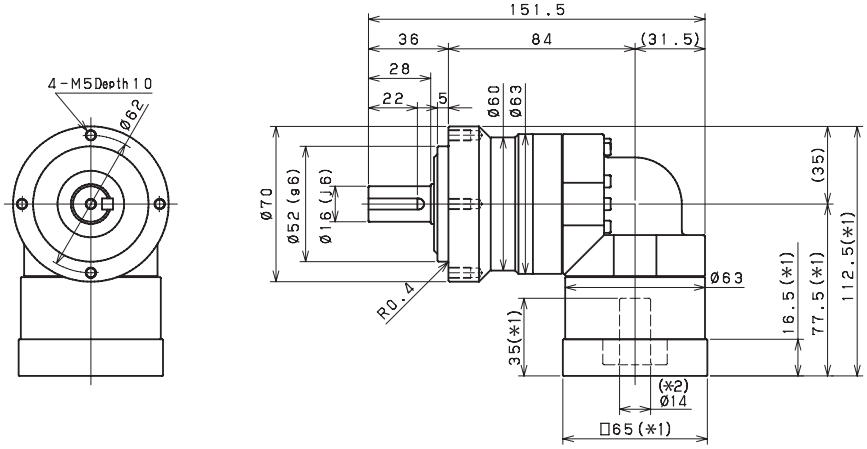

Input bore size ≦φ19 mm

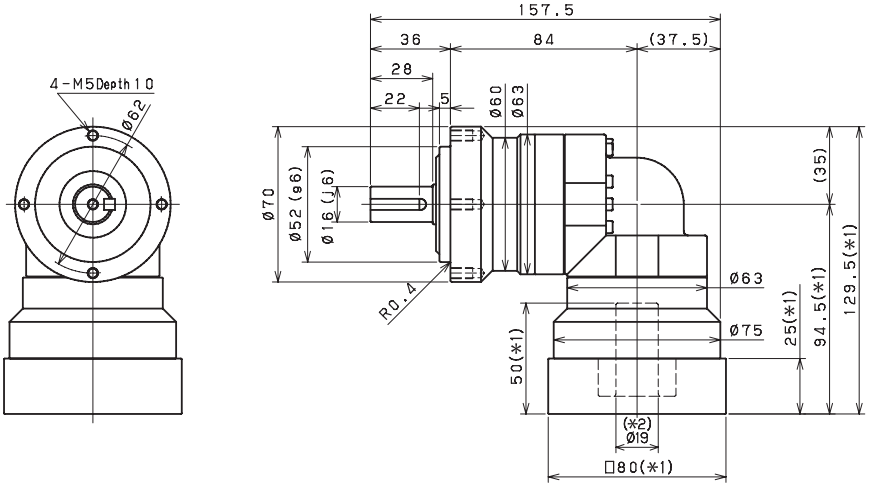

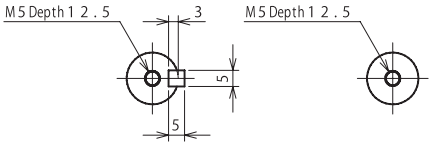

Keyed shaft　　Smooth shaft

*1) Length will vary depending on motor

*2) Bushing will be inserted to adapt to motor shaft

EVL 070 3-Stage Dimensions

Input bore size ≦φ8 mm

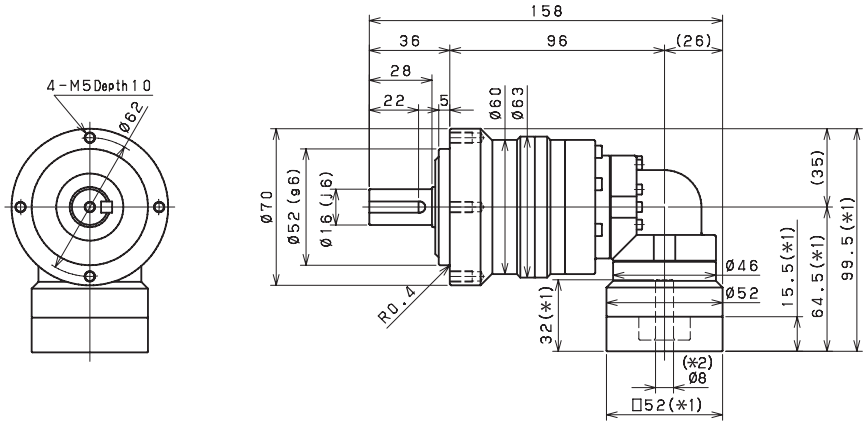

Input bore size ≦φ14 mm

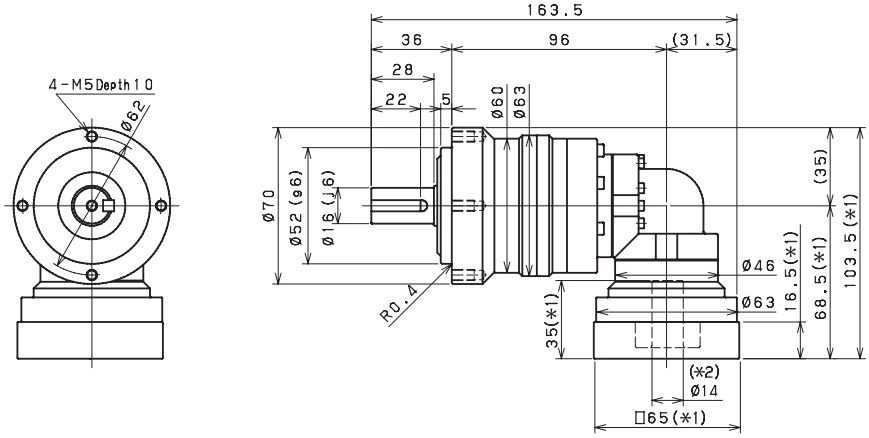

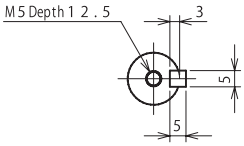

Keyed shaft

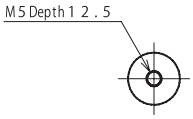

Smooth shaft

*1) Length will vary depending on motor

*2) Bushing will be inserted to adapt to motor shaft

EVL

EVL 090 2-Stage Specifications

Frame Size			**090**							
Ratio	Unit	Note	3	4	5	6	7	8	9	10
Nominal Output Torque	[Nm]	*1	46	61	67	67	67	74	51	51
Maximum Acceleration Torque	[Nm]	*2	77	105	105	105	105	105	78	78
Maximum Torque	[Nm]	*3	90	121	121	119	119	117	93	93
Emergency Stop Torque	[Nm]	*4	130	170	220	220	220	220	170	170
Nominal Input Speed	[rpm]	*5	3000							
Maximum Input Speed	[rpm]	*6	6000							
No Load Running Torque	[Nm]	*7	1.13							
Maximum Radial Load	[N]	*8	2400							
Maximum Axial Load	[N]	*9	2200							
Moment of Inertia (≤ Ø 8)	[kgcm2]	--	--	--	--	--	--	--	--	--
Moment of Inertia (≤ Ø 14)	[kgcm2]	--	2.12	1.89	1.80	1.76	1.73	1.71	1.70	1.69
Moment of Inertia (≤ Ø 19)	[kgcm2]	--	2.45	2.22	2.13	2.09	2.06	2.04	2.03	2.02
Moment of Inertia (≤ Ø 28)	[kgcm2]	--	4.57	4.35	4.26	4.21	4.18	4.17	4.16	4.15
Efficiency	[%]	*10	93							
Torsional Rigidity	[Nm/arc-min]	*11	10							
Maximum Torsional Backlash	[arc-min]	--	≤ 6							
Noise Level	dB [A]	*12	≤ 80							
Protection Class	--	*13	IP54 (IP65)							
Ambient Temperature	[°C]	--	0-40							
Permitted Housing Temperature	[°C]	--	90							
Weight	[kg]	*14	4.9							

EVL 090 3-Stage Specifications

Frame Size			**090**							
Ratio	Unit	Note	15	16	20	25	28	30	35	40
Nominal Output Torque	[Nm]	*1	43	66	68	72	78	47	73	78
Maximum Acceleration Torque	[Nm]	*2	77	128	128	128	128	77	128	128
Maximum Torque	[Nm]	*3	77	128	128	128	128	77	128	128
Emergency Stop Torque	[Nm]	*4	170	220	220	220	220	170	220	220
Nominal Input Speed	[rpm]	*5	3300							
Maximum Input Speed	[rpm]	*6	6000							
No Load Running Torque	[Nm]	*7	0.55							
Maximum Radial Load	[N]	*8	2400							
Maximum Axial Load	[N]	*9	2200							
Moment of Inertia (≤ Ø 8)	[kgcm2]	--	0.34	0.38	0.33	0.32	0.37	0.25	0.32	0.25
Moment of Inertia (≤ Ø 14)	[kgcm2]	--	0.41	0.46	0.40	0.40	0.45	0.33	0.40	0.32
Moment of Inertia (≤ Ø 19)	[kgcm2]	--	0.60	0.65	0.59	0.59	0.64	0.51	0.59	0.51
Moment of Inertia (≤ Ø 28)	[kgcm2]	--	--	--	--	--	--	--	--	--
Efficiency	[%]	*10	88							
Torsional Rigidity	[Nm/arc-min]	*11	10							
Maximum Torsional Backlash	[arc-min]	--	≤ 9							
Noise Level	dB [A]	*12	≤ 80							
Protection Class	--	*13	IP54 (IP65)							
Ambient Temperature	[°C]	--	0-40							
Permitted Housing Temperature	[°C]	--	90							
Weight	[kg]	*14	4.3							

EVL 090 3-Stage Specifications

Frame Size	**090**								
Ratio	Unit	Note	45	50	60	70	80	90	100
Nominal Output Torque	[Nm]	*1	47	73	73	73	78	52	52
Maximum Acceleration Torque	[Nm]	*2	78	128	128	128	128	78	78
Maximum Torque	[Nm]	*3	78	128	128	128	128	78	78
Emergency Stop Torque	[Nm]	*4	170	220	220	220	220	170	170
Nominal Input Speed	[rpm]	*5	3300						
Maximum Input Speed	[rpm]	*6	6000						
No Load Running Torque	[Nm]	*7	0.55						
Maximum Radial Load	[N]	*8	2400						
Maximum Axial Load	[N]	*9	2200						
Moment of Inertia (≤ Ø 8)	[kgcm2]	--	0.32	0.25	0.25	0.25	0.25	0.25	0.25
Moment of Inertia (≤ Ø 14)	[kgcm2]	--	0.39	0.32	0.32	0.32	0.32	0.32	0.32
Moment of Inertia (≤ Ø 19)	[kgcm2]	--	0.58	0.51	0.51	0.51	0.51	0.51	0.51
Moment of Inertia (≤ Ø 28)	[kgcm2]	--	--	--	--	--	--	--	--
Efficiency	[%]	*10	88						
Torsional Rigidity	[Nm/arc-min]	*11	10						
Maximum Torsional Backlash	[arc-min]	--	≤ 9						
Noise Level	dB [A]	*12	≤ 80						
Protection Class	--	*13	IP54 (IP65)						
Ambient Temperature	[°C]	--	0-40						
Permitted Housing Temperature	[°C]	--	90						
Weight	[kg]	*14	4.3						

*1) At nominal input speed, service life is 20,000 hours

*2) The maximum torque when starting or stopping operation. Apply Cycle Factor f_0, found on page 468, for higher duty cycle applications

*3) Permitted 10,000 times during service life. Based on 10% of maximum radial load and smooth output shaft

*4) The maximum torque allowed under a stress situation. Permitted 1,000 times during service life

*5) The average input speed at nominal input torque. Maintain housing temperature below permitted value

*6) The maximum intermittent input speed

*7) Torque at no load applied to the input shaft at nominal input speed

*8) The maximum radial load that the gearbox can accept

*9) The maximum axial load that the gearbox can accept

*10) The efficiency at the nominal output torque rating

*11) This does not include lost motion

*12) Contact Nidec Drive Technology for the testing conditions and environment

*13) Various wash-down options are available. Contact Nidec Drive Technology for more details

*14) Weight may vary slightly between models

EVL 090 2-Stage Dimensions

Input bore size ≦φ14 mm

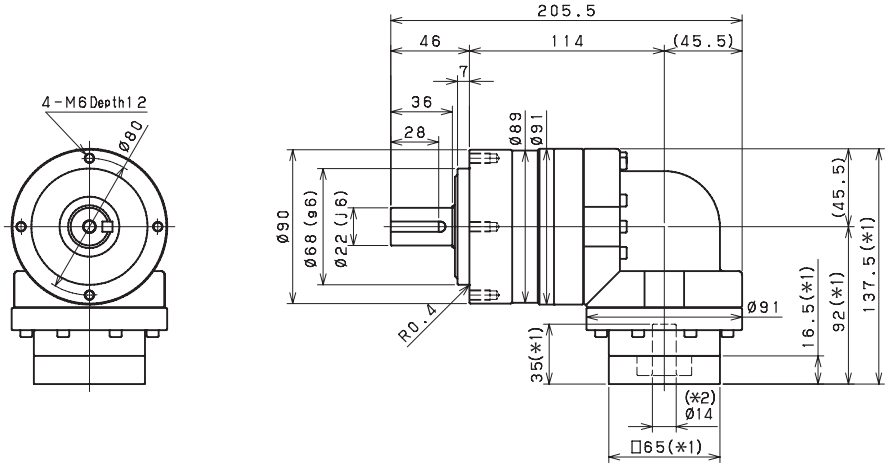

Input bore size ≦φ19 mm

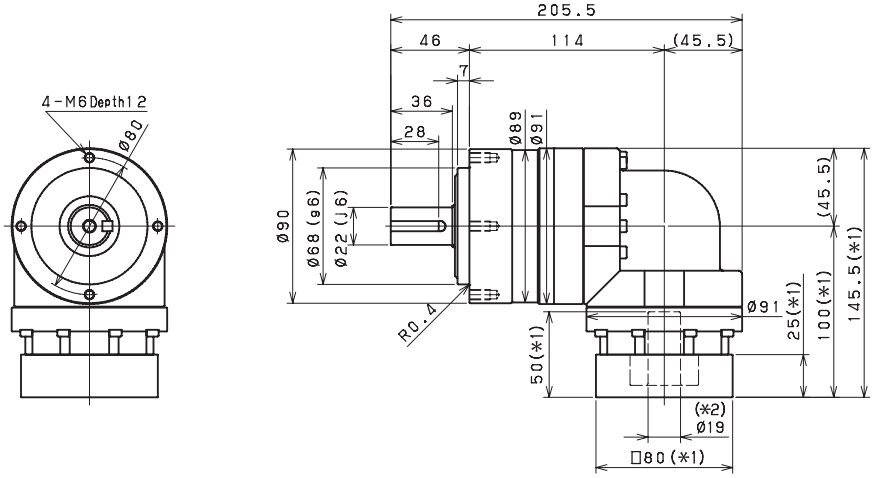

Input bore size ≦φ28 mm

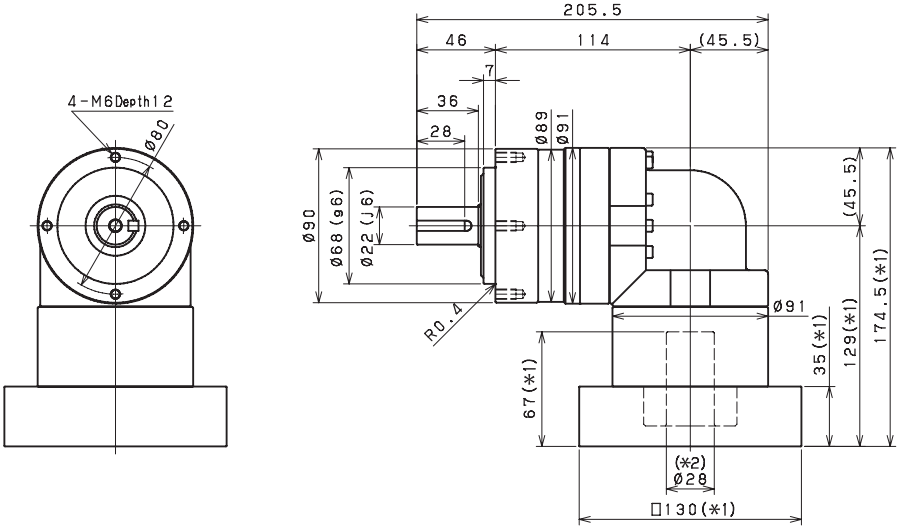

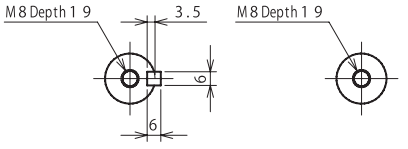

Keyed shaft　　Smooth shaft

*1) Length will vary depending on motor.

*2) Bushing will be inserted to adapt to motor shaft

EVL 090 3-Stage Dimensions

Input bore size ≦φ8 mm

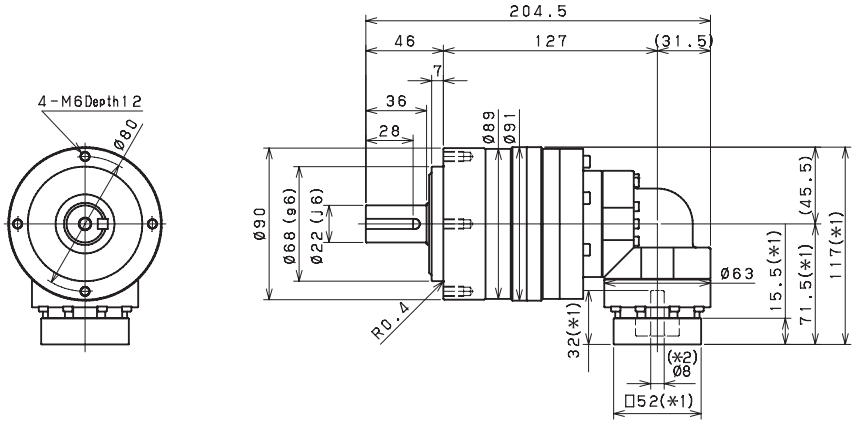

Input bore size ≦φ14 mm

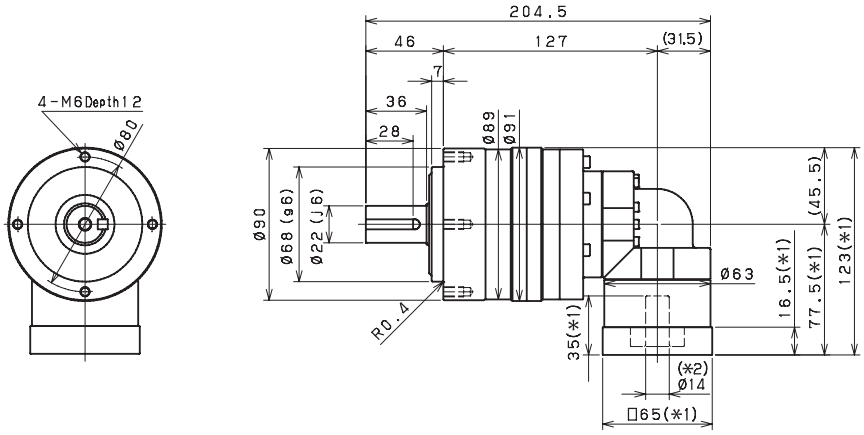

Input bore size ≦φ19 mm

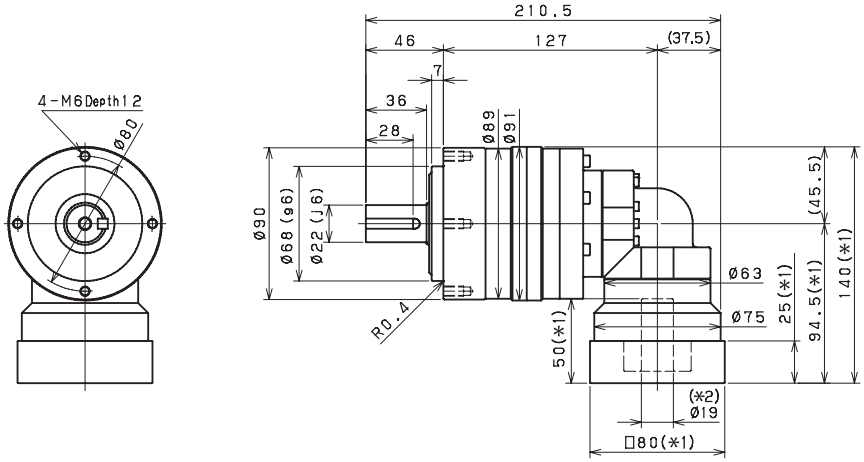

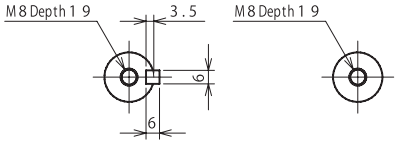

Keyed shaft　　Smooth shaft

*1) Length will vary depending on motor.

*2) Bushing will be inserted to adapt to motor shaft

EVL 120 2-Stage Specifications

Frame Size	**120**									
Ratio	Unit	Note	3	4	5	6	7	8	9	10
Nominal Output Torque	[Nm]	*1	77	108	123	154	154	154	128	128
Maximum Acceleration Torque	[Nm]	*2	172	227	272	340	340	340	240	240
Maximum Torque	[Nm]	*3	205	271	325	401	401	401	288	288
Emergency Stop Torque	[Nm]	*4	320	430	500	550	550	550	450	450
Nominal Input Speed	[rpm]	*5	3000							
Maximum Input Speed	[rpm]	*6	6000							
No Load Running Torque	[Nm]	*7	1.88							
Maximum Radial Load	[N]	*8	4300							
Maximum Axial Load	[N]	*9	3900							
Moment of Inertia (≤ Ø 14)	[kgcm2]	--	--	--	--	--	--	--	--	--
Moment of Inertia (≤ Ø 19)	[kgcm2]	--	6.74	5.49	5.02	4.77	4.65	4.55	4.49	4.46
Moment of Inertia (≤ Ø 28)	[kgcm2]	--	8.34	7.08	6.61	6.36	6.24	6.14	6.08	6.05
Moment of Inertia (≤ Ø 38)	[kgcm2]	--	15.41	14.15	13.69	13.43	13.31	13.22	13.16	13.12
Efficiency	[%]	*10	93							
Torsional Rigidity	[Nm/arc-min]	*11	31							
Maximum Torsional Backlash	[arc-min]	--	≤ 6							
Noise Level	dB [A]	*12	≤ 85							
Protection Class	--	*13	IP54 (IP65)							
Ambient Temperature	[°C]	--	0-40							
Permitted Housing Temperature	[°C]	--	90							
Weight	[kg]	*14	10.2							

EVL 120 3-Stage Specifications

Frame Size	**120**									
Ratio	Unit	Note	15	16	20	25	28	30	35	40
Nominal Output Torque	[Nm]	*1	125	136	162	174	174	132	174	172
Maximum Acceleration Torque	[Nm]	*2	229	295	340	340	340	229	340	340
Maximum Torque	[Nm]	*3	229	295	340	340	340	229	340	340
Emergency Stop Torque	[Nm]	*4	450	550	550	550	550	450	550	550
Nominal Input Speed	[rpm]	*5	3100							
Maximum Input Speed	[rpm]	*6	6000							
No Load Running Torque	[Nm]	*7	1.11							
Maximum Radial Load	[N]	*8	4300							
Maximum Axial Load	[N]	*9	3900							
Moment of Inertia (≤ Ø 14)	[kgcm2]	--	2.25	2.46	2.20	2.18	2.40	1.87	2.16	1.86
Moment of Inertia (≤ Ø 19)	[kgcm2]	--	2.58	2.79	2.53	2.51	2.73	2.20	2.49	2.19
Moment of Inertia (≤ Ø 28)	[kgcm2]	--	4.70	4.91	4.65	4.64	4.86	4.33	4.62	4.32
Moment of Inertia (≤ Ø 38)	[kgcm2]	--	--	--	--	--	--	--	--	--
Efficiency	[%]	*10	88							
Torsional Rigidity	[Nm/arc-min]	*11	31							
Maximum Torsional Backlash	[arc-min]	--	≤ 9							
Noise Level	dB [A]	*12	≤ 85							
Protection Class	--	*13	IP54 (IP65)							
Ambient Temperature	[°C]	--	0-40							
Permitted Housing Temperature	[°C]	--	90							
Weight	[kg]	*14	10							

EVL 120 3-Stage Specifications

Frame Size	**120**								
Ratio	Unit	Note	45	50	60	70	80	90	100
Nominal Output Torque	[Nm]	*1	132	174	174	174	174	132	132
Maximum Acceleration Torque	[Nm]	*2	240	340	340	340	340	240	240
Maximum Torque	[Nm]	*3	240	340	340	340	340	240	240
Emergency Stop Torque	[Nm]	*4	450	550	550	550	550	450	450
Nominal Input Speed	[rpm]	*5	3100						
Maximum Input Speed	[rpm]	*6	6000						
No Load Running Torque	[Nm]	*7	1.11						
Maximum Radial Load	[N]	*8	4300						
Maximum Axial Load	[N]	*9	3900						
Moment of Inertia (≤ Ø 14)	[kgcm2]	--	2.15	1.86	1.85	1.85	1.85	1.85	1.85
Moment of Inertia (≤ Ø 19)	[kgcm2]	--	2.48	2.19	2.18	2.18	2.18	2.18	2.18
Moment of Inertia (≤ Ø 28)	[kgcm2]	--	4.61	4.31	4.31	4.31	4.31	4.31	4.31
Moment of Inertia (≤ Ø 38)	[kgcm2]	--	--	--	--	--	----	--	--
Efficiency	[%]	*10	88						
Torsional Rigidity	[Nm/arc-min]	*11	31						
Maximum Torsional Backlash	[arc-min]	--	≤ 9						
Noise Level	dB [A]	*12	≤ 85						
Protection Class	--	*13	IP54 (IP65)						
Ambient Temperature	[°C]	--	0-40						
Permitted Housing Temperature	[°C]	--	90						
Weight	[kg]	*14	10						

*1) At nominal input speed, service life is 20,000 hours

*2) The maximum torque when starting or stopping operation. Apply Cycle Factor $\mathbf{f_0}$, found on page 468, for higher duty cycle applications

*3) Permitted 10,000 times during service life. Based on 10% of maximum radial load and smooth output shaft

*4) The maximum torque allowed under a stress situation. Permitted 1,000 times during service life

*5) The average input speed at nominal input torque. Maintain housing temperature below permitted value

*6) The maximum intermittent input speed

*7) Torque at no load applied to the input shaft at nominal input speed

*8) The maximum radial load that the gearbox can accept

*9) The maximum axial load that the gearbox can accept

*10) The efficiency at the nominal output torque rating

*11) This does not include lost motion

*12) Contact Nidec Drive Technology for the testing conditions and environment

*13) Various wash-down options are available. Contact Nidec Drive Technology for more details

*14) Weight may vary slightly between models

EVL 120 2-Stage Dimensions

Input bore size ≦φ19 mm

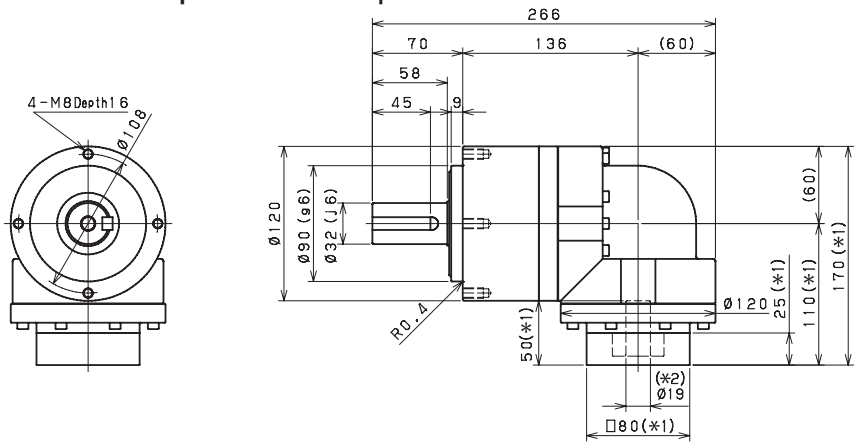

Input bore size ≦φ28 mm

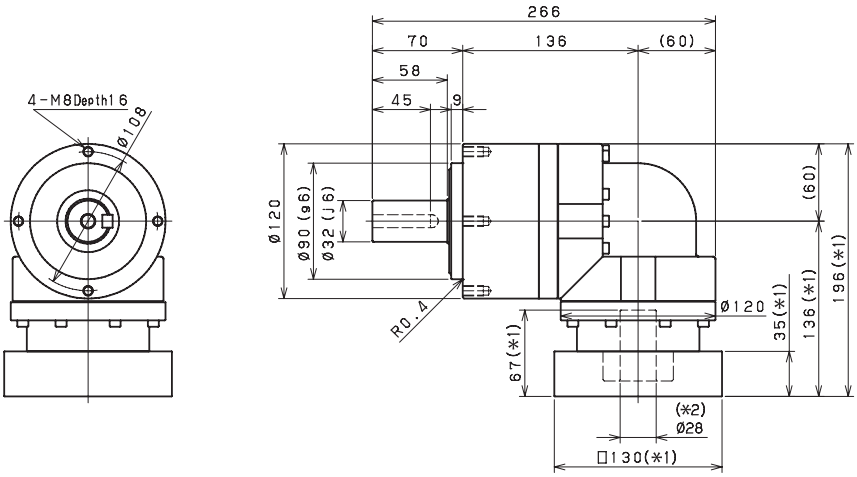

Input bore size ≦φ38 mm

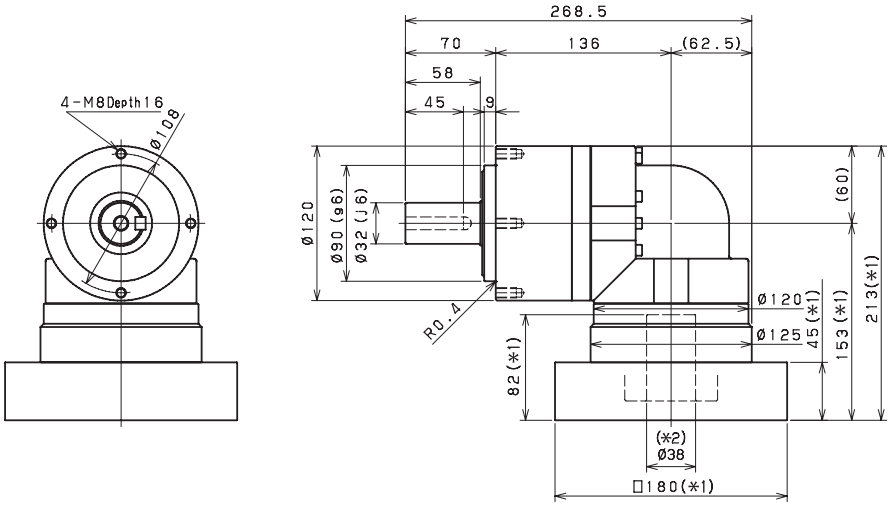

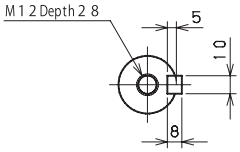

Keyed shaft

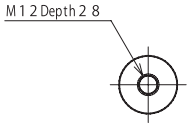

Smooth shaft

*1) Length will vary depending on motor

*2) Bushing will be inserted to adapt to motor shaft

EVL 120 3-Stage Dimensions

Input bore size ≦φ14 mm

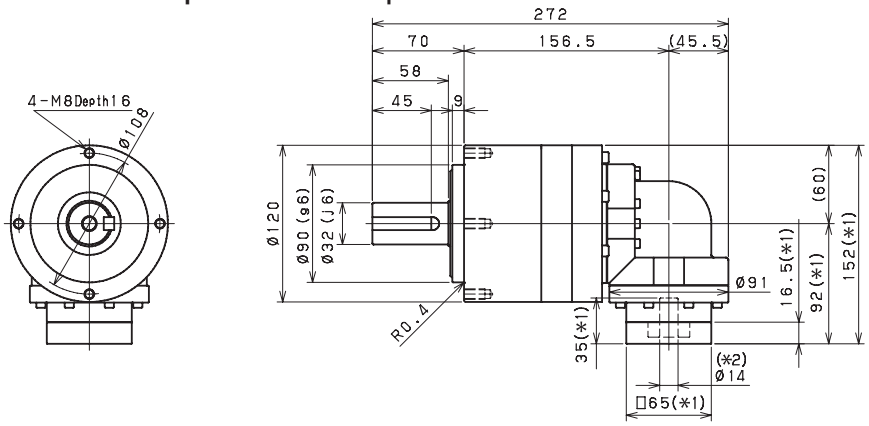

Input bore size ≦φ19 mm

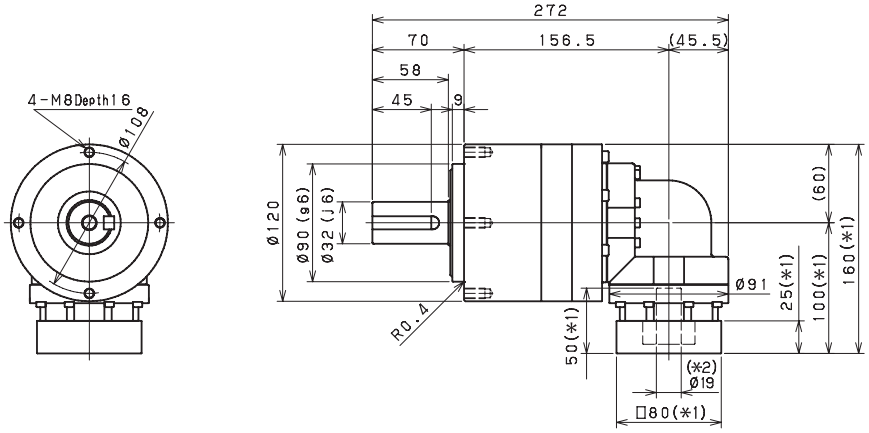

Input bore size ≦φ28 mm

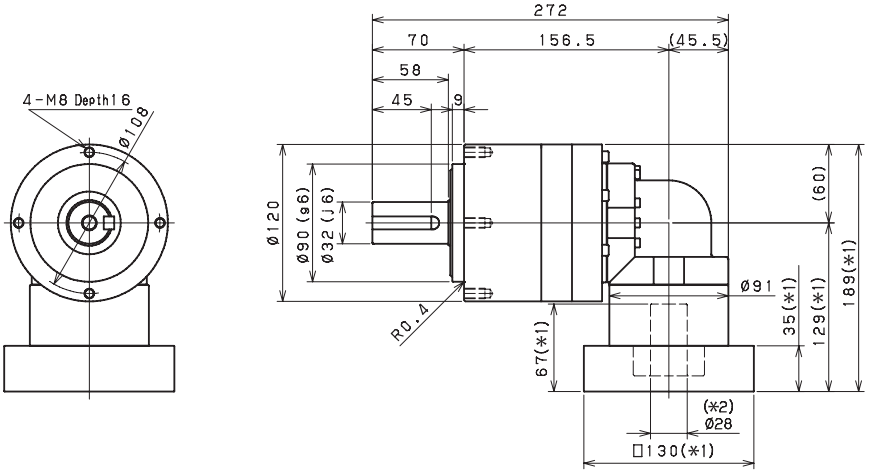

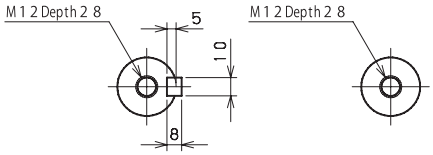

Keyed shaft　　Smooth shaft

*1) Length will vary depending on motor

*2) Bushing will be inserted to adapt to motor shaft

EVL

EVL 155 2-Stage Specifications

Frame Size	**155**									
Ratio	Unit	Note	3	4	5	6	7	8	9	10
Nominal Output Torque	[Nm]	*1	132	181	205	266	307	307	233	233
Maximum Acceleration Torque	[Nm]	*2	296	389	458	595	687	687	480	480
Maximum Torque	[Nm]	*3	329	452	531	664	766	766	559	559
Emergency Stop Torque	[Nm]	*4	700	950	1100	1100	1100	1100	750	750
Nominal Input Speed	[rpm]	*5	2000							
Maximum Input Speed	[rpm]	*6	5000							
No Load Running Torque	[Nm]	*7	3.26							
Maximum Radial Load	[N]	*8	9100							
Maximum Axial Load	[N]	*9	8200							
Moment of Inertia (≤ Ø 19)	[kgcm2]	--	--	--	--	--	--	--	--	--
Moment of Inertia (≤ Ø 28)	[kgcm2]	--	23.13	18.57	16.91	16.01	15.58	15.23	14.77	14.66
Moment of Inertia (≤ Ø 38)	[kgcm2]	--	27.50	22.94	21.28	20.38	19.95	19.61	19.41	19.03
Moment of Inertia (≤ Ø 48)	[kgcm2]	--	40.73	36.17	34.51	33.61	33.18	32.84	32.37	32.26
Efficiency	[%]	*10	93							
Torsional Rigidity	[Nm/arc-min]	*11	60							
Maximum Torsional Backlash	[arc-min]	--	≤ 6							
Noise Level	dB [A]	*12	≤ 85							
Protection Class	--	*13	IP54 (IP65)							
Ambient Temperature	[°C]	--	0-40							
Permitted Housing Temperature	[°C]	--	90							
Weight	[kg]	*14	19.8							

EVL 155 3-Stage Specifications

Frame Size	**155**									
Ratio	Unit	Note	15	16	20	25	28	30	35	40
Nominal Output Torque	[Nm]	*1	230	307	316	352	352	240	352	337
Maximum Acceleration Torque	[Nm]	*2	456	687	687	687	687	456	687	687
Maximum Torque	[Nm]	*3	456	687	687	687	687	456	687	687
Emergency Stop Torque	[Nm]	*4	750	1100	1100	1100	1100	750	1100	1100
Nominal Input Speed	[rpm]	*5	2300							
Maximum Input Speed	[rpm]	*6	5000							
No Load Running Torque	[Nm]	*7	2.56							
Maximum Radial Load	[N]	*8	9100							
Maximum Axial Load	[N]	*9	8200							
Moment of Inertia (≤ Ø 19)	[kgcm2]	--	6.40	7.29	6.22	6.15	7.09	4.99	6.09	4.95
Moment of Inertia (≤ Ø 28)	[kgcm2]	--	8.00	8.88	7.81	7.75	8.68	6.58	7.69	6.54
Moment of Inertia (≤ Ø 38)	[kgcm2]	--	15.07	15.96	14.89	14.82	15.76	13.66	14.76	13.61
Moment of Inertia (≤ Ø 48)	[kgcm2]	--	--	--	--	--	--	--	--	--
Efficiency	[%]	*10	88							
Torsional Rigidity	[Nm/arc-min]	*11	60							
Maximum Torsional Backlash	[arc-min]	--	≤ 9							
Noise Level	dB [A]	*12	≤ 85							
Protection Class	--	*13	IP54 (IP65)							
Ambient Temperature	[°C]	--	0-40							
Permitted Housing Temperature	[°C]	--	90							
Weight	[kg]	*14	20.4							

EVL 155 3-Stage Specifications

Frame Size	**155**								
Ratio	Unit	Note	45	50	60	70	80	90	100
Nominal Output Torque	[Nm]	*1	240	352	352	352	352	240	240
Maximum Acceleration Torque	[Nm]	*2	480	687	687	687	687	480	480
Maximum Torque	[Nm]	*3	480	687	687	687	687	480	480
Emergency Stop Torque	[Nm]	*4	750	1100	1100	1100	1100	750	750
Nominal Input Speed	[rpm]	*5	2300						
Maximum Input Speed	[rpm]	*6	5000						
No Load Running Torque	[Nm]	*7	2.56						
Maximum Radial Load	[N]	*8	9100						
Maximum Axial Load	[N]	*9	8200						
Moment of Inertia (≤ Ø 19)	[kgcm2]	--	6.07	4.93	4.92	4.91	4.91	4.91	4.91
Moment of Inertia (≤ Ø 28)	[kgcm2]	--	7.66	6.52	6.51	6.51	6.50	6.50	6.50
Moment of Inertia (≤ Ø 38)	[kgcm2]	--	14.74	13.59	13.59	13.58	13.58	13.57	13.57
Moment of Inertia (≤ Ø 48)	[kgcm2]	--	--	--	--	--	--	--	--
Efficiency	[%]	*10	88						
Torsional Rigidity	[Nm/arc-min]	*11	60						
Maximum Torsional Backlash	[arc-min]	--	≤ 9						
Noise Level	dB [A]	*12	≤ 85						
Protection Class	--	*13	IP54 (IP65)						
Ambient Temperature	[°C]	--	0-40						
Permitted Housing Temperature	[°C]	--	90						
Weight	[kg]	*14	20.4						

*1) At nominal input speed, service life is 20,000 hours

*2) The maximum torque when starting or stopping operation. Apply Cycle Factor f_0, found on page 468, for higher duty cycle applications

*3) Permitted 10,000 times during service life. Based on 10% of maximum radial load and smooth output shaft

*4) The maximum torque allowed under a stress situation. Permitted 1,000 times during service life

*5) The average input speed at nominal input torque. Maintain housing temperature below permitted value

*6) The maximum intermittent input speed

*7) Torque at no load applied to the input shaft at nominal input speed

*8) The maximum radial load that the gearbox can accept

*9) The maximum axial load that the gearbox can accept

*10) The efficiency at the nominal output torque rating

*11) This does not include lost motion

*12) Contact Nidec Drive Technology for the testing conditions and environment

*13) Various wash-down options are available. Contact Nidec Drive Technology for more details

*14) Weight may vary slightly between models

EVL 155 2-Stage Dimensions

Input bore size ≦φ28 mm

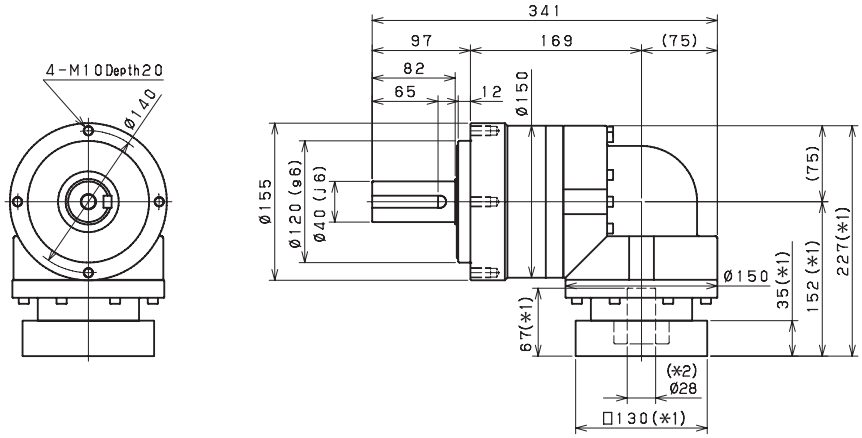

Input bore size ≦φ38 mm

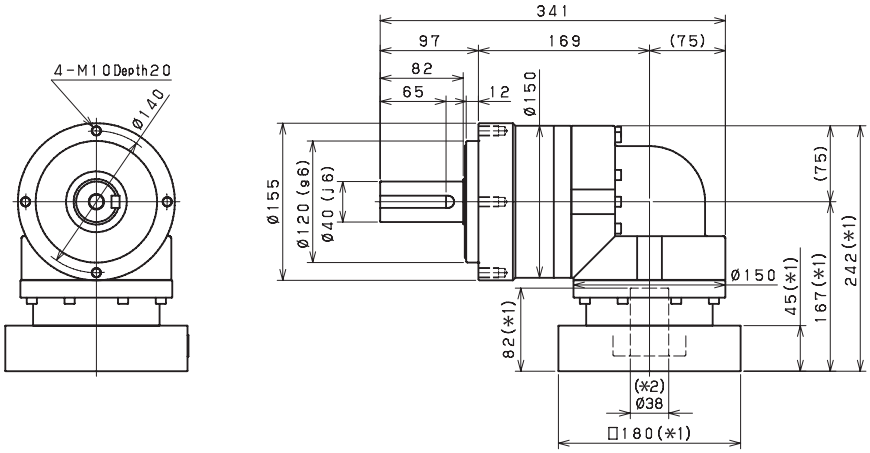

Input bore size ≦φ48 mm

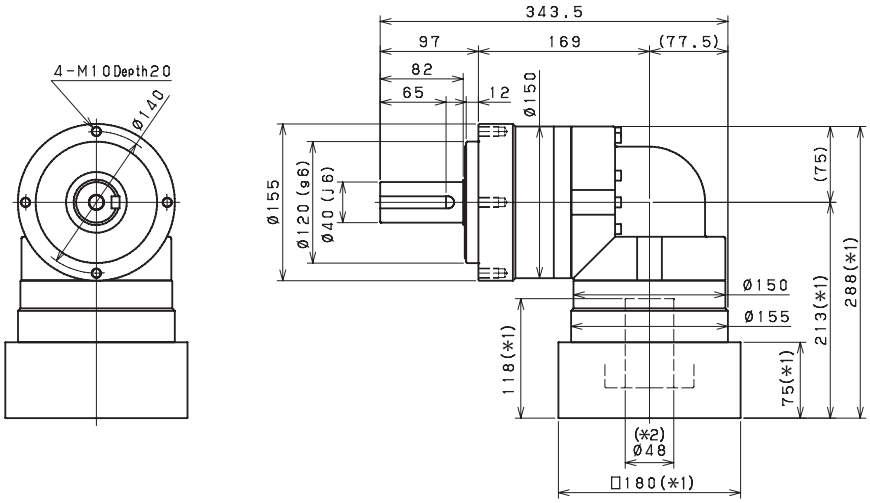

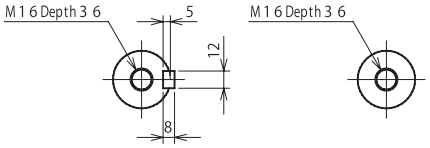

Keyed shaft　　Smooth shaft

*1) Length will vary depending on motor.

*2) Bushing will be inserted to adapt to motor shaft

EVL 155 3-Stage Dimensions

Input bore size ≦φ19 mm

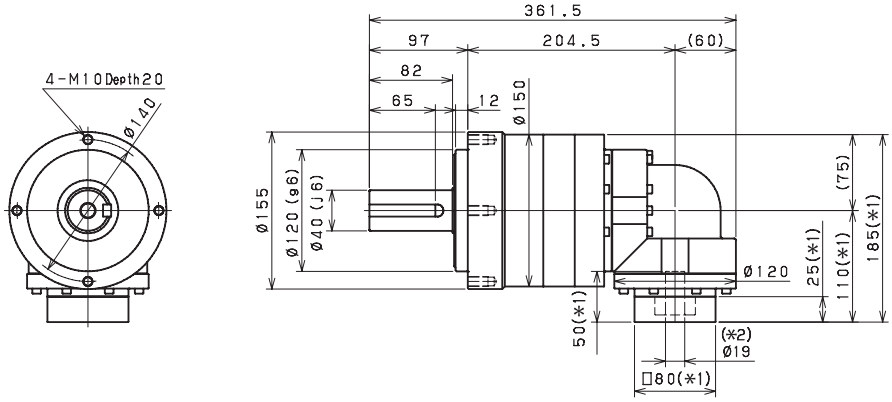

Input bore size ≦φ28 mm

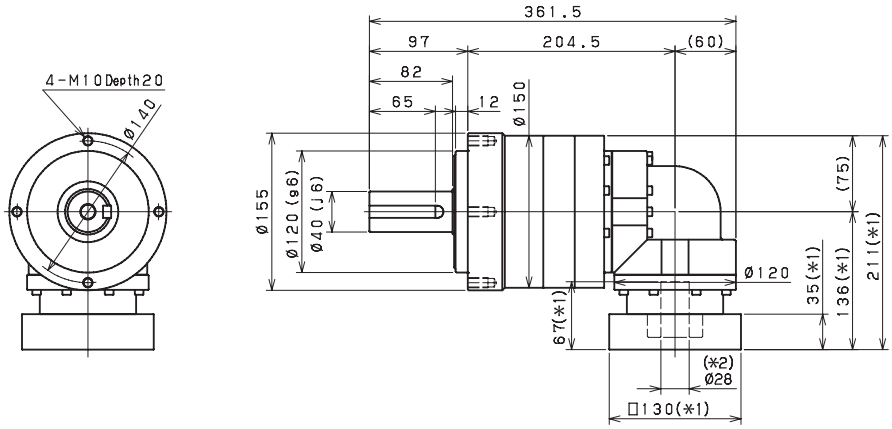

Input bore size ≦φ38 mm

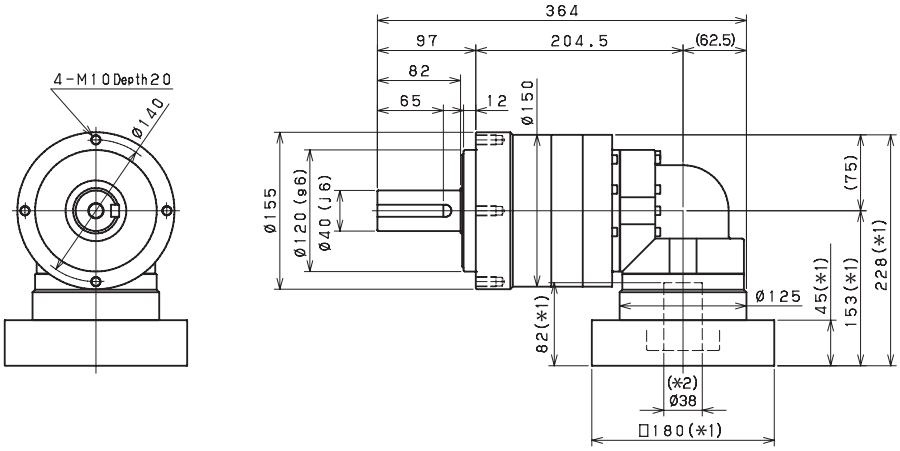

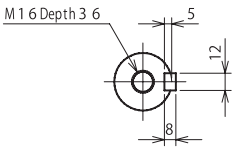

Keyed shaft

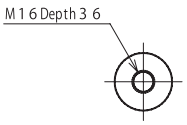

Smooth shaft

*1) Length will vary depending on motor.

*2) Bushing will be inserted to adapt to motor shaft

EVL 205 2-Stage Specifications

Frame Size	**205**									
Ratio	Units	Note	3	4	5	6	7	8	9	10
Nominal Output Torque	[Nm]	*1	421	604	646	646	646	646	478	478
Maximum Acceleration Torque	[Nm]	*2	679	904	1127	1315	1315	1315	931	931
Maximum Torque	[Nm]	*3	750	1064	1327	1498	1498	1498	1144	1144
Emergency Stop Torque	[Nm]	*4	1300	1700	2000	2500	2500	2500	2000	2000
Nominal Input Speed	[rpm]	*5	1500							
Maximum Input Speed	[rpm]	*6	4000							
No Load Running Torque	[Nm]	*7	10.8							
Maximum Radial Load	[N]	*8	15000							
Maximum Axial Load	[N]	*9	14000							
Moment of Inertia (≤Ø 28)	[kgcm2]	--	--	--	--	--	--	--	--	--
Moment of Inertia (≤Ø 38)	[kgcm2]	--	93.71	77.72	71.89	68.74	66.43	65.27	64.60	64.28
Moment of Inertia (≤Ø 48)	[kgcm2]	--	128.6	112.6	106.8	103.6	101.3	100.1	99.46	99.14
Moment of Inertia (≤ Ø 65)	[kgcm2]	--	214.2	198.2	192.4	189.2	186.9	185.7	185.1	184.7
Efficiency	[%]	*10	93							
Torsional Rigidity	[Nm/arcmin]	*11	175							
Maximum Torsional Backlash	[Arc-min]	--	≤ 8							
Noise Level	dB [A]	*12	≤ 85							
Protection Class	--	*13	IP54 (IP65)							
Ambient Temperature	[°C]	--	0-40							
Permitted Housing Temperature	[°C]	--	90							
Weight	[kg]	*14	52							

EVL 205 3-Stage Specifications

Frame Size	**205**									
Ratio	Units	Note	15	16	20	25	28	30	35	40
Nominal Output Torque	[Nm]	*1	442	583	646	683	710	480	710	465
Maximum Acceleration Torque	[Nm]	*2	916	1315	1315	1315	1315	916	1315	1315
Maximum Torque	[Nm]	*3	916	1315	1315	1315	1315	916	1315	1315
Emergency Stop Torque	[Nm]	*4	2000	2500	2500	2500	2500	2000	2500	2500
Nominal Input Speed	[rpm]	*5	2100							
Maximum Input Speed	[rpm]	*6	4000							
No Load Running Torque	[Nm]	*7	4.7							
Maximum Radial Load	[N]	*8	15000							
Maximum Axial Load	[N]	*9	14000							
Moment of Inertia (≤Ø 28)	[kgcm2]	--	11.49	12.09	11.15	10.98	11.59	10.33	10.83	10.24
Moment of Inertia (≤Ø 38)	[kgcm2]	--	20.28	20.88	19.94	19.77	20.38	19.11	19.62	19.03
Moment of Inertia (≤Ø 48)	[kgcm2]	--	25.10	25.70	24.76	24.59	25.20	23.94	24.44	23.85
Moment of Inertia (≤ Ø 65)	[kgcm2]	--	--	--	--	--	--	--	--	--
Efficiency	[%]	*10	88							
Torsional Rigidity	[Nm/arcmin]	*11	175							
Maximum Torsional Backlash	[Arc-min]	--	≤ 11							
Noise Level	dB [A]	*12	≤ 85							
Protection Class	--	*13	IP54 (IP65)							
Ambient Temperature	[°C]	--	0-40							
Permitted Housing Temperature	[°C]	--	90							
Weight	[kg]	*14	39							

EVL 205 3-Stage Specifications

Frame Size	**205**								
Ratio	Units	Note	45	50	60	70	80	90	100
Nominal Output Torque	[Nm]	*1	480	710	710	710	710	480	480
Maximum Acceleration Torque	[Nm]	*2	931	1315	1315	1315	1315	931	931
Maximum Torque	[Nm]	*3	931	1315	1315	1315	1315	931	931
Emergency Stop Torque	[Nm]	*4	2000	2500	2500	2500	2500	2000	2000
Nominal Input Speed	[rpm]	*5	2100						
Maximum Input Speed	[rpm]	*6	4000						
No Load Running Torque	[Nm]	*7	4.7						
Maximum Radial Load	[N]	*8	15000						
Maximum Axial Load	[N]	*9	14000						
Moment of Inertia (≤Ø 28)	[kgcm2]	--	10.76	10.20	10.18	10.16	10.15	10.15	10.14
Moment of Inertia (≤Ø 38)	[kgcm2]	--	19.55	18.99	18.96	18.95	18.94	18.93	18.93
Moment of Inertia (≤Ø 48)	[kgcm2]	--	24.37	23.81	23.78	23.77	23.76	23.75	23.75
Moment of Inertia (≤ Ø 65)	[kgcm2]	--	--	--	--	--	--	--	--
Efficiency	[%]	*10	88						
Torsional Rigidity	[Nm/arcmin]	*11	175						
Maximum Torsional Backlash	[Arc-min]	--	≤ 11						
Noise Level	dB [A]	*12	≤ 85						
Protection Class	--	*13	IP54 (IP65)						
Ambient Temperature	[°C]	--	0-40						
Permitted Housing Temperature	[°C]	--	90						
Weight	[kg]	*14	39						

*1) At nominal input speed, service life is 20,000 hours

*2) The maximum torque when starting or stopping operation. Apply Cycle Factor f_0, found on page 468, for higher duty cycle applications

*3) Permitted 10,000 times during service life. Based on 10% of maximum radial load and smooth output shaft

*4) The maximum torque allowed under a stress situation. Permitted 1,000 times during service life

*5) The average input speed at nominal input torque. Maintain housing temperature below permitted value

*6) The maximum intermittent input speed

*7) Torque at no load applied to the input shaft at nominal input speed

*8) The maximum radial load that the gearbox can accept

*9) The maximum axial load that the gearbox can accept

*10) The efficiency at the nominal output torque rating

*11) This does not include lost motion

*12) Contact Nidec Drive Technology for the testing conditions and environment

*13) Various wash-down options are available. Contact Nidec Drive Technology for more details

*14) Weight may vary slightly between models

EVL 205 2-Stage Dimensions

Input bore size ≦φ38 mm

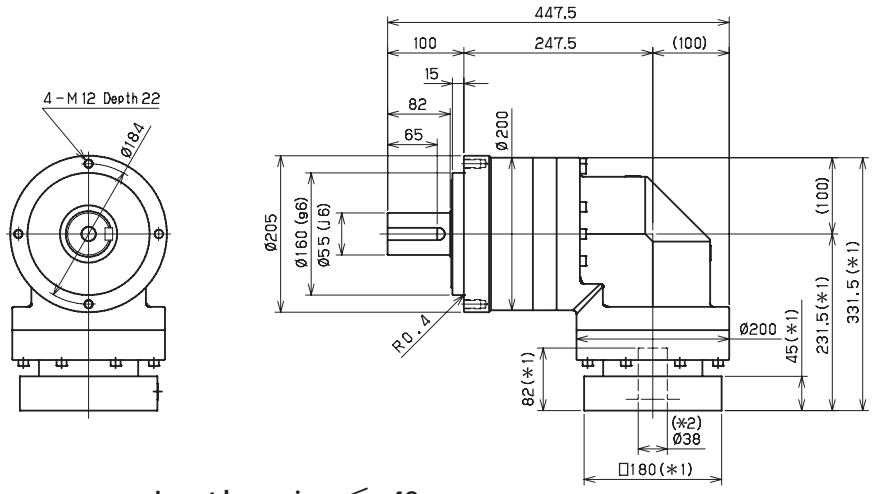

Input bore size ≦φ48 mm

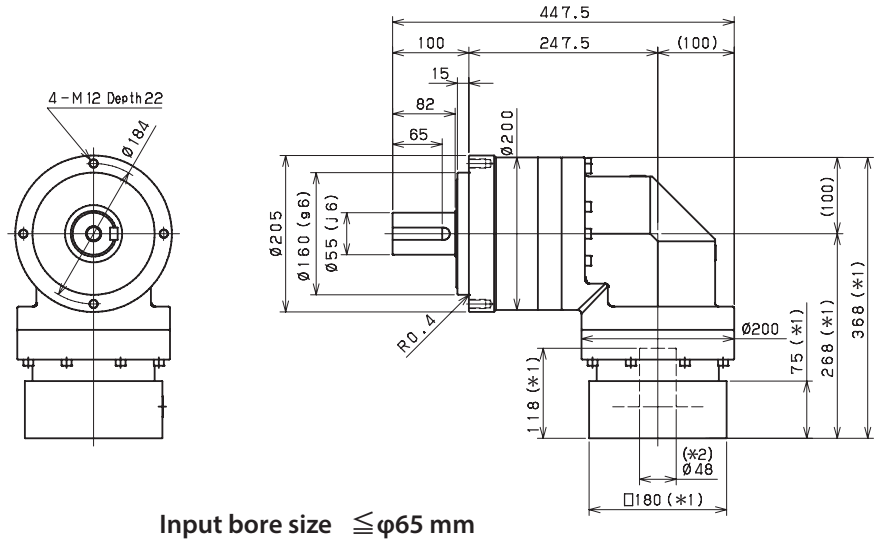

Input bore size ≦φ65 mm

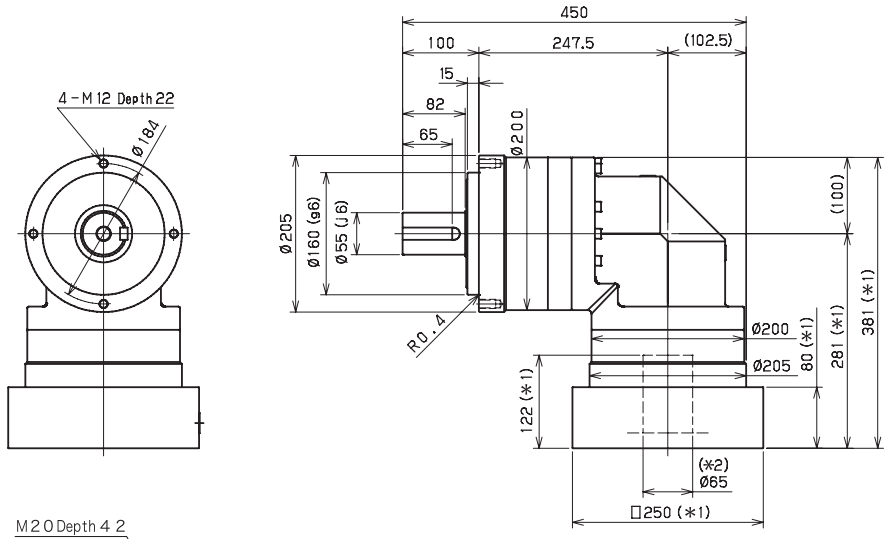

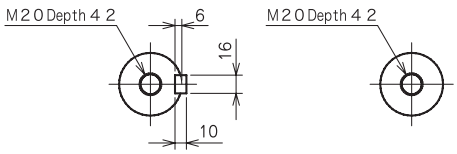

Keyed shaft　　Smooth shaft

*1) Length will vary depending on motor.

*2) Bushing will be inserted to adapt to motor shaft

EVL 205 3-Stage Dimensions

Input bore size ≦φ28 mm

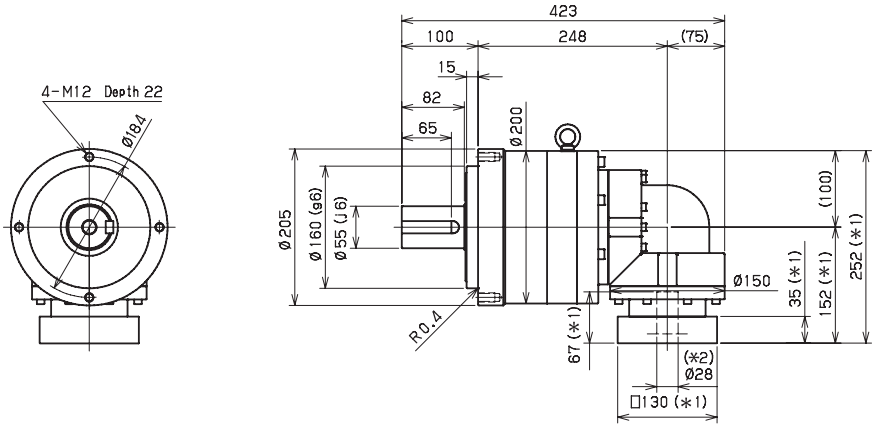

Input bore size ≦φ38 mm

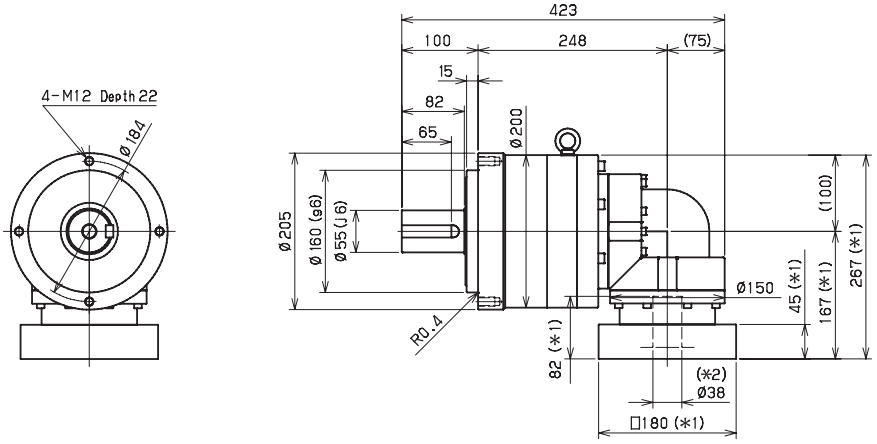

Input bore size ≦φ48 mm

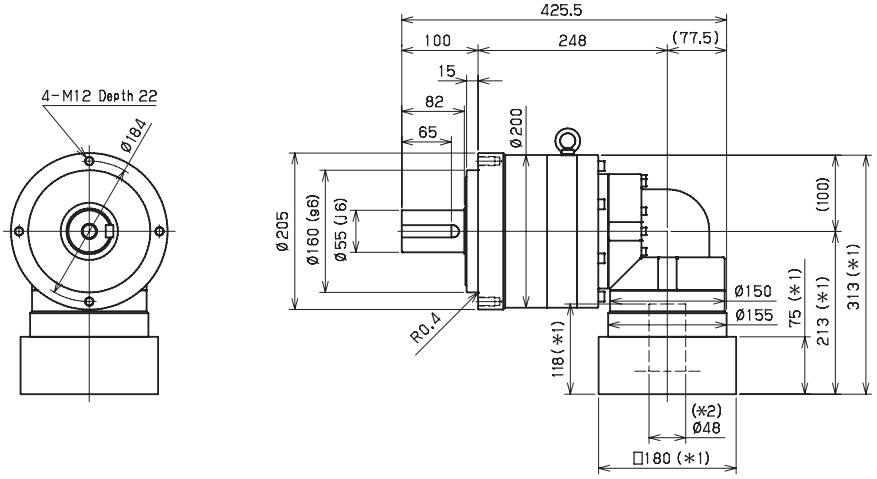

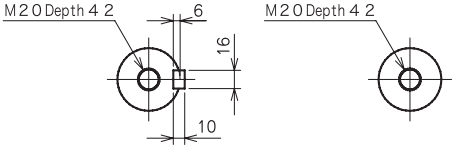

Keyed shaft　　Smooth shaft

*1) Length will vary depending on motor.

*2) Bushing will be inserted to adapt to motor shaft

EVL

EVL 235 2-Stage Specifications

Frame Size	**235**									
Ratio	Units	Note	3	4	5	6	7	8	9	10
Nominal Output Torque	[Nm]	*1	575	765	960	1208	1313	1313	1064	1064
Maximum Acceleration Torque	[Nm]	*2	1160	1555	1945	2112	2112	2063	1812	1529
Maximum Torque	[Nm]	*3	1336	1861	2328	2441	2441	2339	2032	1787
Emergency Stop Torque	[Nm]	*4	2500	3300	4000	4500	4500	4500	3600	3600
Nominal Input Speed	[rpm]	*5	1200							
Maximum Input Speed	[rpm]	*6	3000							
No Load Running Torque	[Nm]	*7	14.5							
Maximum Radial Load	[N]	*8	15000							
Maximum Axial Load	[N]	*9	14000							
Moment of Inertia (≤Ø 38)	[kgcm2]	--	--	--	--	--	--	--	--	--
Moment of Inertia (≤Ø 48)	[kgcm2]	--	148.0	122.9	113.3	108.1	104.7	102.7	101.6	101.0
Moment of Inertia (≤ Ø 65)	[kgcm2]	--	223.2	198.1	188.6	183.3	180.0	178.0	176.8	176.2
Efficiency	[%]	*10	93							
Torsional Rigidity	[Nm/arcmin]	*11	400							
Maximum Torsional Backlash	[Arc-min]	--	≤ 8							
Noise Level	dB [A]	*12	≤ 85							
Protection Class	--	*13	IP54 (IP65)							
Ambient Temperature	[°C]	--	0-40							
Permitted Housing Temperature	[°C]	--	90							
Weight	[kg]	*14	68							

EVL 235 3-Stage Specifications

Frame Size	**235**									
Ratio	Units	Note	15	16	20	25	28	30	35	40
Nominal Output Torque	[Nm]	*1	858	1200	1200	1360	1440	948	1440	1440
Maximum Acceleration Torque	[Nm]	*2	1463	2112	2112	2112	2112	1463	2112	2112
Maximum Torque	[Nm]	*3	1463	2112	2112	2112	2112	1463	2112	2112
Emergency Stop Torque	[Nm]	*4	3600	4500	4500	4500	4500	3600	4500	4500
Nominal Input Speed	[rpm]	*5	1500							
Maximum Input Speed	[rpm]	*6	3000							
No Load Running Torque	[Nm]	*7	10.2							
Maximum Radial Load	[N]	*8	15000							
Maximum Axial Load	[N]	*9	14000							
Moment of Inertia (≤Ø 38)	[kgcm2]	--	36.32	37.24	35.75	35.47	36.39	34.39	35.21	34.25
Moment of Inertia (≤Ø 48)	[kgcm2]	--	66.14	67.06	65.57	65.28	66.21	64.21	65.03	64.07
Moment of Inertia (≤ Ø 65)	[kgcm2]	--	--	--	--	--	--	--	--	--
Efficiency	[%]	*10	88							
Torsional Rigidity	[Nm/arcmin]	*11	400							
Maximum Torsional Backlash	[Arc-min]	--	≤ 11							
Noise Level	dB [A]	*12	≤ 85							
Protection Class	--	*13	IP54 (IP65)							
Ambient Temperature	[°C]	--	0-40							
Permitted Housing Temperature	[°C]	--	90							
Weight	[kg]	*14	70							

EVL 235 3-Stage Specifications

Frame Size	**235**								
Ratio	Units	Note	45	50	60	70	80	90	100
Nominal Output Torque	[Nm]	*1	948	1440	1440	1440	1440	948	948
Maximum Acceleration Torque	[Nm]	*2	1246	2112	2112	2112	1728	1246	1131
Maximum Torque	[Nm]	*3	1246	2112	2112	2112	1728	1246	1131
Emergency Stop Torque	[Nm]	*4	3600	4500	4500	4500	4500	3600	3600
Nominal Input Speed	[rpm]	*5	1500						
Maximum Input Speed	[rpm]	*6	3000						
No Load Running Torque	[Nm]	*7	10.2						
Maximum Radial Load	[N]	*8	15000						
Maximum Axial Load	[N]	*9	14000						
Moment of Inertia (≤Ø 38)	[kgcm2]	--	35.10	34.18	34.14	34.11	34.10	34.09	34.08
Moment of Inertia (≤Ø 48)	[kgcm2]	--	64.92	63.99	63.95	63.93	63.91	63.90	63.90
Moment of Inertia (≤ Ø 65)	[kgcm2]	--	--	--	--	--	--	--	--
Efficiency	[%]	*10	88						
Torsional Rigidity	[Nm/arcmin]	*11	400						
Maximum Torsional Backlash	[Arc-min]	--	≤ 11						
Noise Level	dB [A]	*12	≤ 85						
Protection Class	--	*13	IP54 (IP65)						
Ambient Temperature	[°C]	--	0-40						
Permitted Housing Temperature	[°C]	--	90						
Weight	[kg]	*14	70						

*1) At nominal input speed, service life is 20,000 hours

*2) The maximum torque when starting or stopping operation. Apply Cycle Factor f_0, found on page 468, for higher duty cycle applications

*3) Permitted 10,000 times during service life. Based on 10% of maximum radial load and smooth output shaft

*4) The maximum torque allowed under a stress situation. Permitted 1,000 times during service life

*5) The average input speed at nominal input torque. Maintain housing temperature below permitted value

*6) The maximum intermittent input speed

*7) Torque at no load applied to the input shaft at nominal input speed

*8) The maximum radial load that the gearbox can accept

*9) The maximum axial load that the gearbox can accept

*10) The efficiency at the nominal output torque rating

*11) This does not include lost motion

*12) Contact Nidec Drive Technology for the testing conditions and environment

*13) Various wash-down options are available. Contact Nidec Drive Technology for more details

*14) Weight may vary slightly between models

EVL 235 2-Stage Dimensions

Input bore size ≦φ48 mm

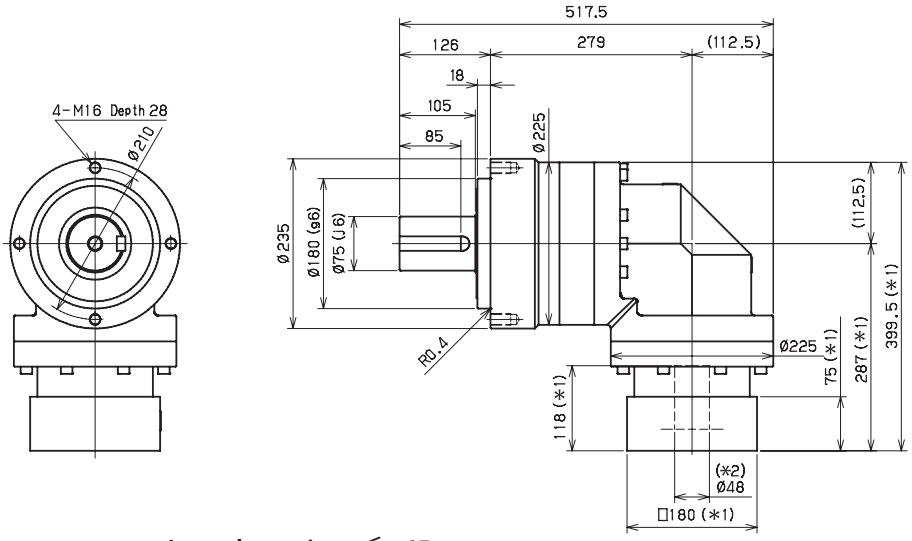

Input bore size ≦φ65 mm

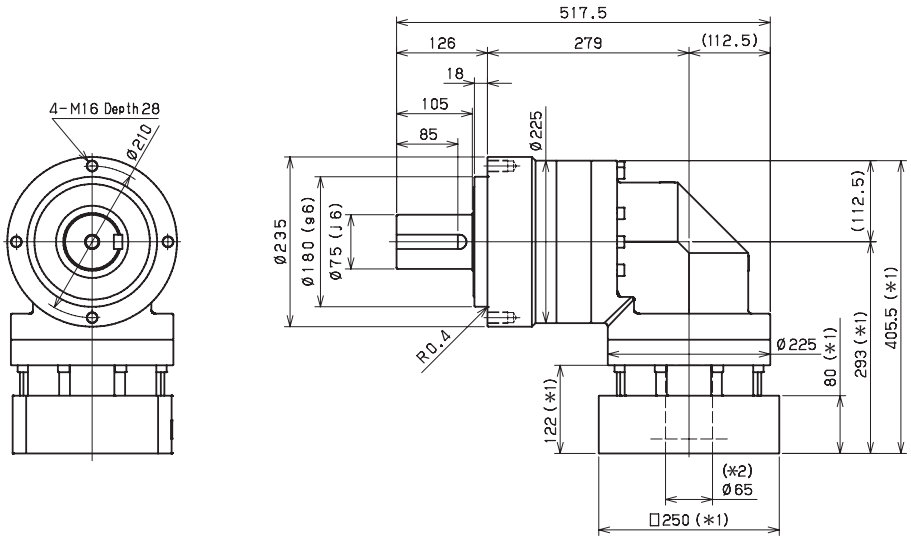

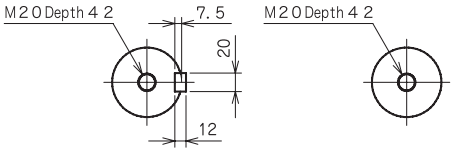

Keyed shaft　　Smooth shaft

*1) Length will vary depending on motor.

*2) Bushing will be inserted to adapt to motor shaft

EVL 235 3-Stage Dimensions

Input bore size ≦φ38 mm

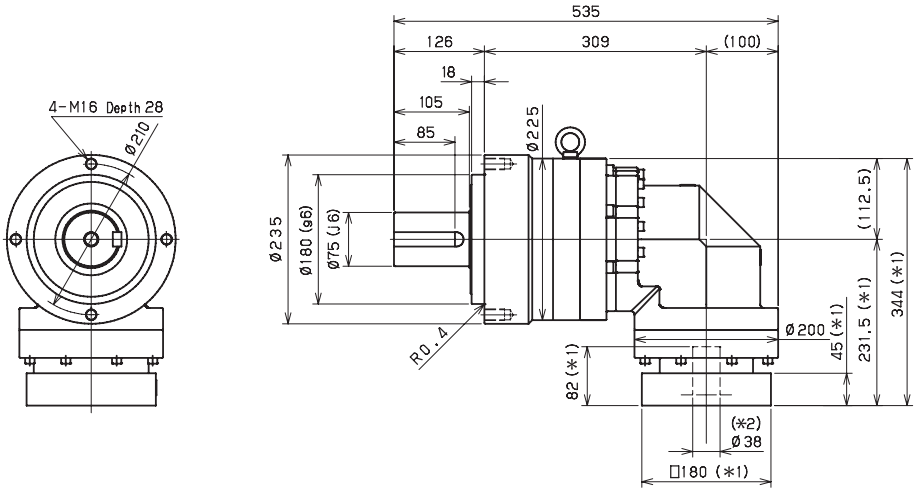

Input bore size ≦φ48 mm

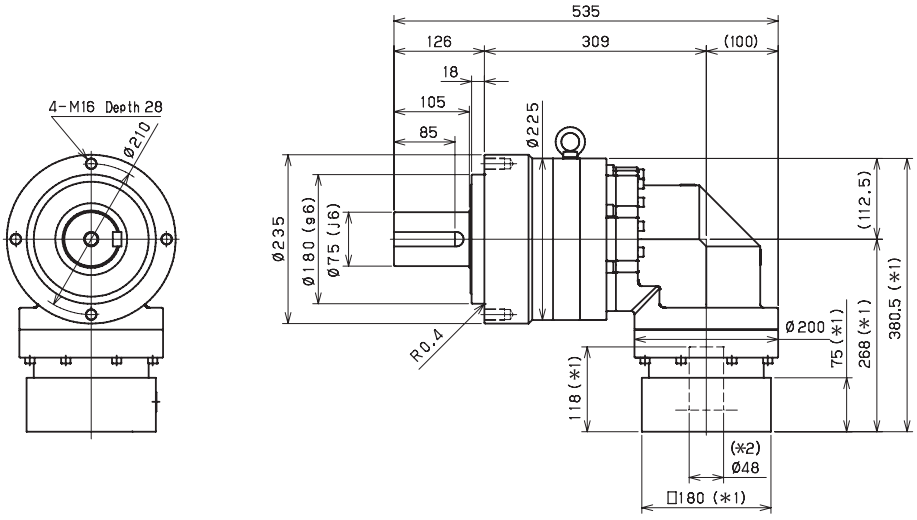

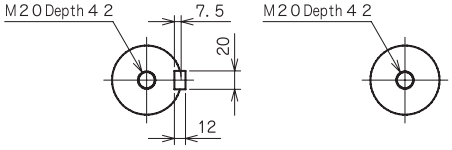

Keyed shaft　　Smooth shaft

*1) Length will vary depending on motor.

*2) Bushing will be inserted to adapt to motor shaft

EVB SERIES

An excellent choice for applications requiring high positional accuracy and dynamic performance. The EVB is a ≤4 arc-min gearbox that offers a right angle design with a through hole mounting style, making it compact and easy to assemble onto various equipment. This product is an ideal fit for various belt drive and actuator applications found throughout the packaging and assembly cell automation markets.

Various standard wash down and food grade options are available, making the EVB an attractive choice for the toughest environments. We offer the broadest selection of frame sizes and ratios, with immediate availability on most configurations. Industry standard mounting dimensions allow the EVB to be employed in legacy equipment designs, saving our customers time and money.

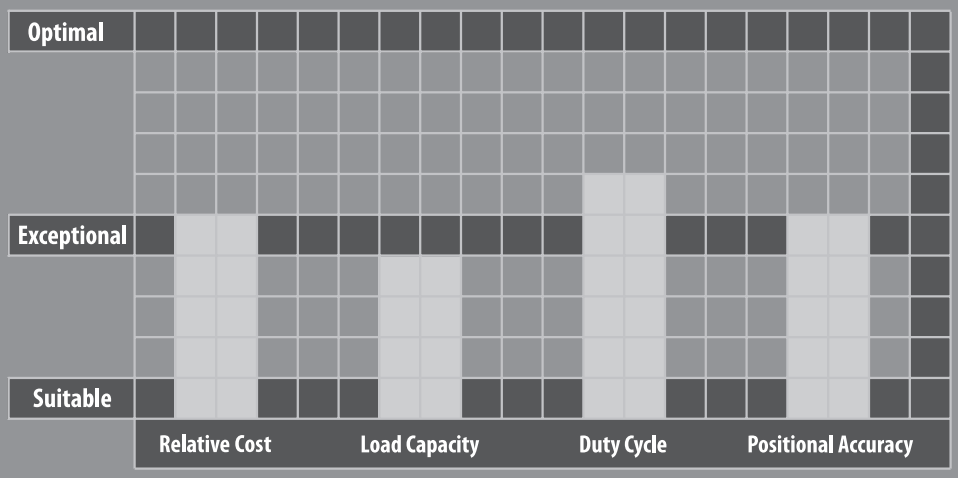

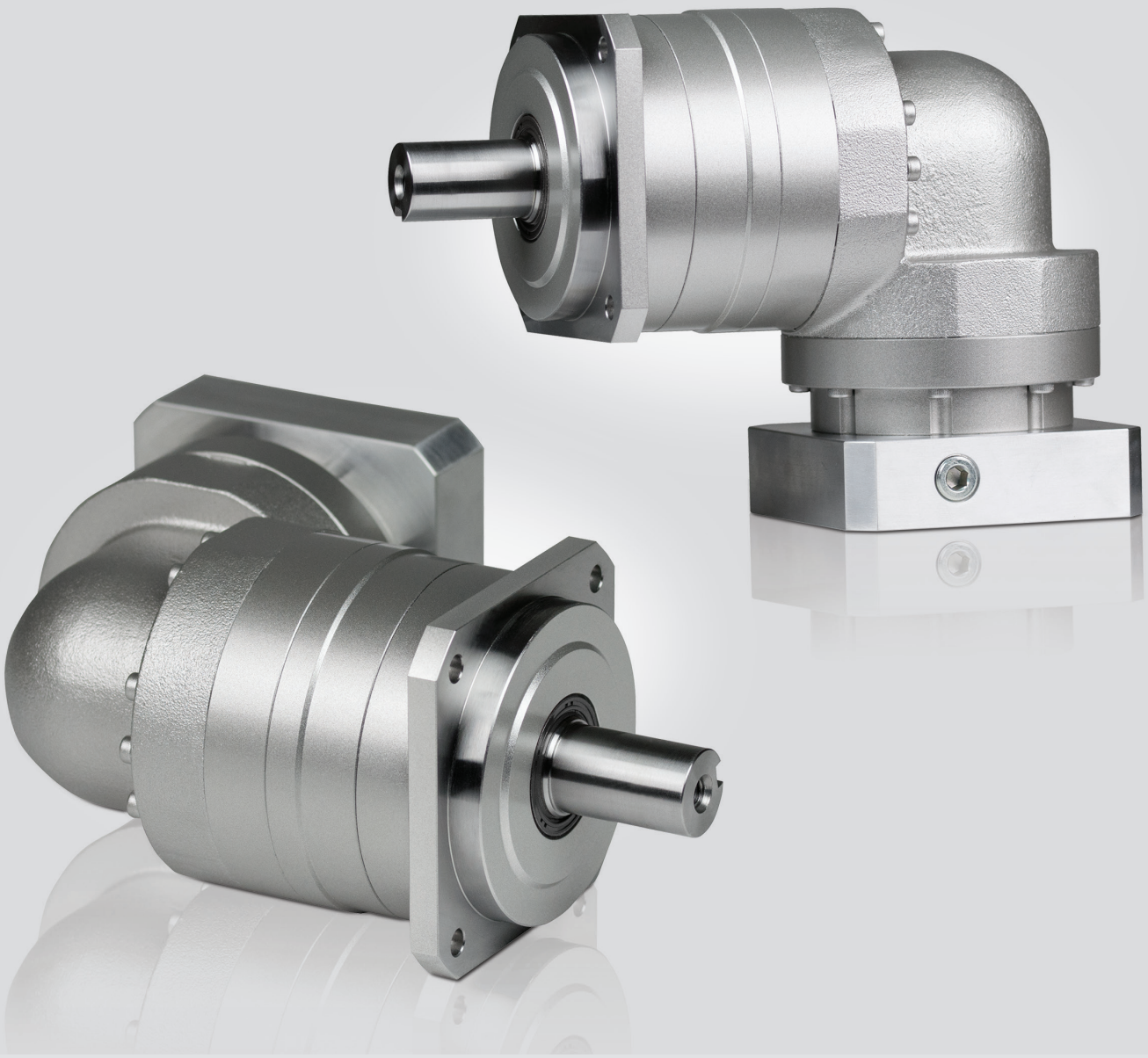

EVB SERIES

- Compact, space-saving solution for mid to high end motion control applications
- The widest range of frame sizes and ratios available in the market
- Best-In-class backlash (≤4 arc-min)
- Broad range of mounting adapters offer a simple, precise attachment to any motor
- Maintenance-free solution that is lubricated for life. High performance grease allows flexible mounting in any orientation
- Industry standard mounting dimensions
- Assembled in the USA

EVB Series Features

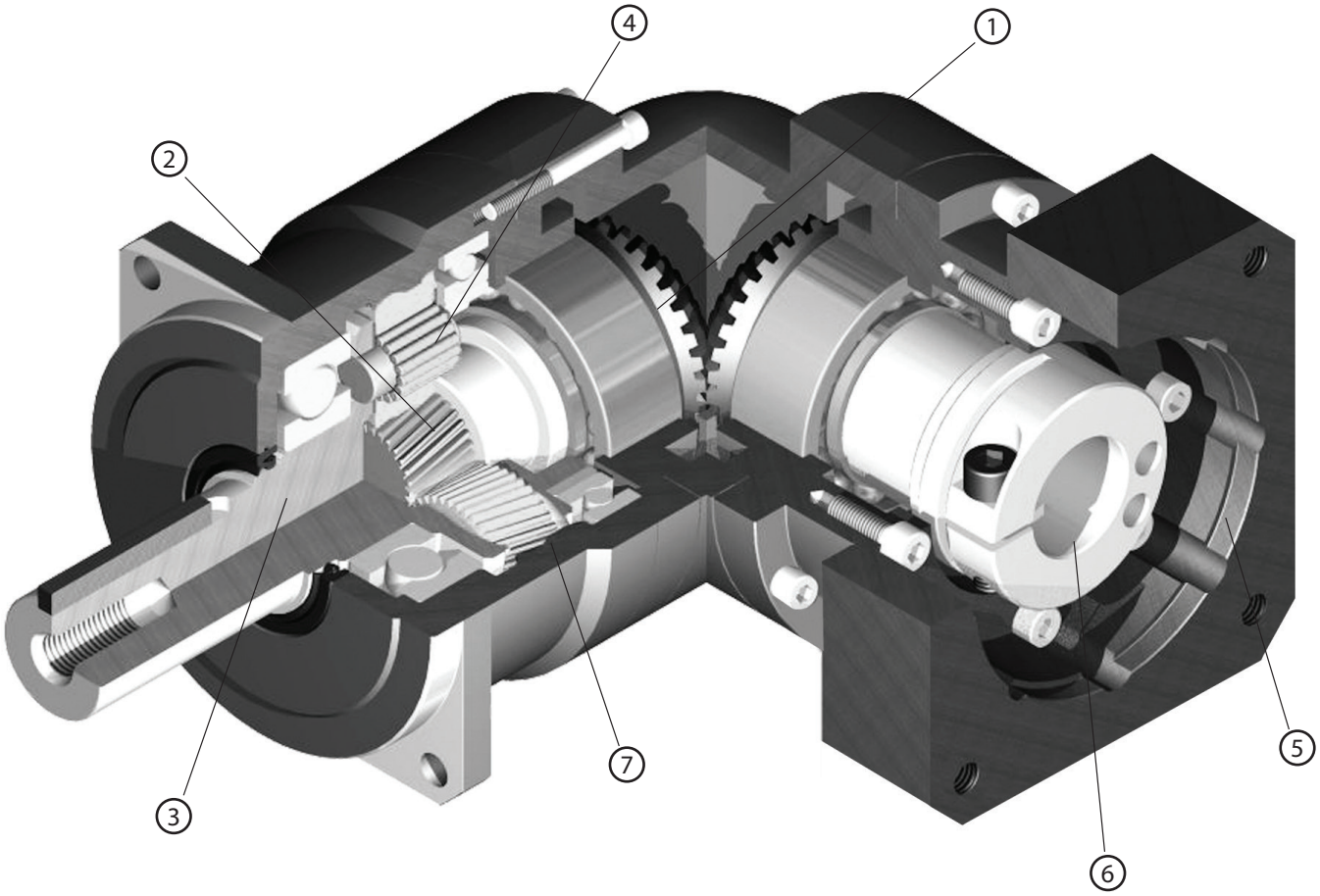

1. Right angle bevel gear configuration allows motor to be mounted at a 90 degree position from the gearbox, saving space
2. Carburized helical gears with proprietary secondary finishing process for higher accuracy and smooth, quiet operation. 40% higher tooth surface area than the industry standard
3. One piece output shaft and planet carrier with two bearings straddling the planet gears. Higher stiffness, torque capacity and safety factor, with guaranteed alignment of gearing
4. Uncaged needle roller bearings provide excellent torque density and torsional rigidity. 43% larger bearing surface area compared to the rest of the industry
5. Optimized mounting system with active centering on motor pilot diameter guarantees alignment of motor. Motor can be installed in any orientation
6. True concentric motor shaft clamping connection, optimized for your specific motor. Reduced inertia for dynamic performance and balanced for high speed operation
7. Ring gear machined directly into the housing, not welded or pressed in. Provides greater concentricity and elimination of speed fluctuation

EVB Series Model Code

EVB – 090 – 7 – K 4 – 19HB16

- 19HB16: Motor mounting code (*1)
- 4: Backlash: 060, 090, 115, 140 ≤4 - 7 arc-min; 180, 220 ≤8 - 11 arc-min
- K: Output mounting style: K: Keyed shaft; S: Smooth shaft
- 7: Ratio: 2-Stage: 3, 4, 5, 6, 7, 8, 9, 10; 3-Stage: 15, 16, 20, 25, 28, 30, 35, 40, 45, 50, 60, 70, 80, 90, 100
- 090: Frame size: 060, 090, 115, 140, 180, 220
- EVB: Series

*1) Motor mounting code varies depending on the motor. Use the selection tool link below to configure the code.

Contact us for additional information or refer to our online gearbox selection tool.

Selection tool https://www.nidec-drivetechnology.co.jp/selection/all/

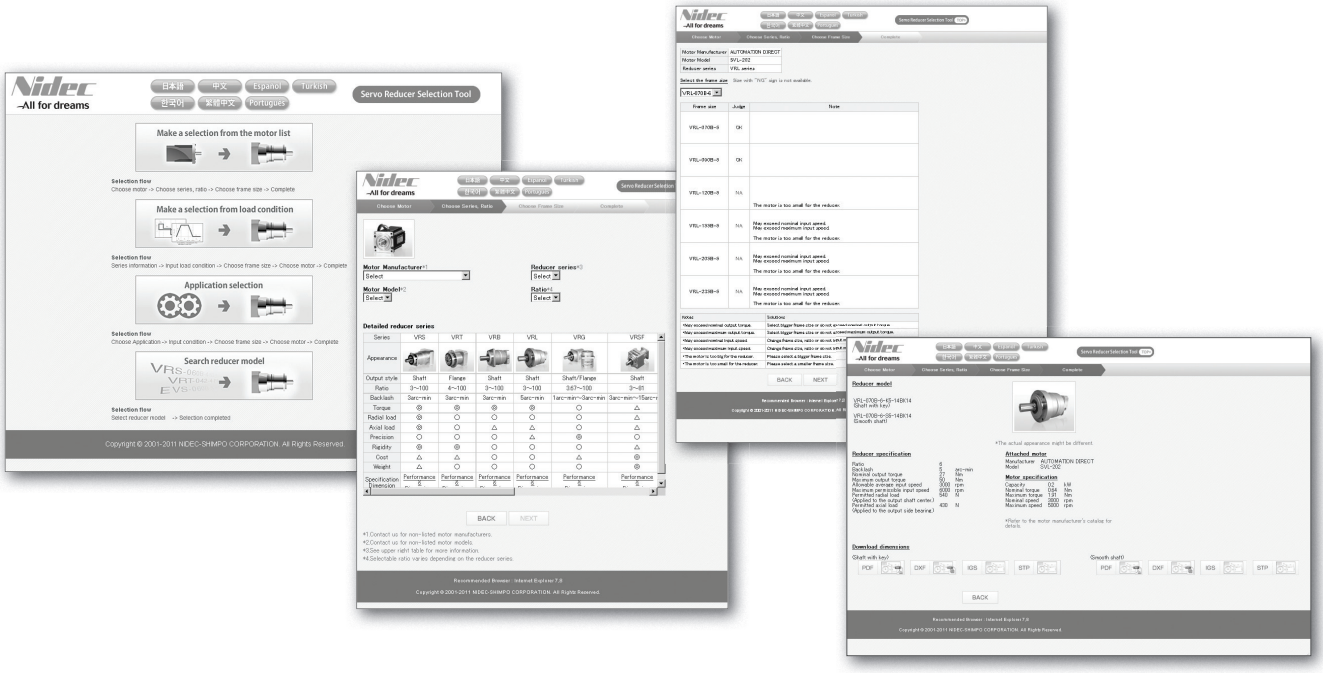

EVB 060 2-Stage Specifications

Frame Size	**060**									
Ratio	Unit	Note	3	4	5	6	7	8	9	10
Nominal Output Torque	[Nm]	*1	12	16	22	24	24	24	19	19
Maximum Acceleration Torque	[Nm]	*2	29	38	48	54	54	54	38	38
Maximum Torque	[Nm]	*3	33	45	56	63	63	61	45	45
Emergency Stop Torque	[Nm]	*4	50	65	80	90	90	90	65	65
Nominal Input Speed	[rpm]	*5	3300							
Maximum Input Speed	[rpm]	*6	6000							
No Load Running Torque	[Nm]	*7	0.33							
Maximum Radial Load	[N]	*8	1200							
Maximum Axial Load	[N]	*9	1100							
Moment of Inertia (≤ Ø 8)	[kgcm2]	--	0.31	0.27	0.25	0.24	0.23	0.23	0.23	0.23
Moment of Inertia (≤ Ø 14)	[kgcm2]	--	0.39	0.34	0.32	0.31	0.31	0.31	0.30	0.30
Moment of Inertia (≤ Ø 19)	[kgcm2]	--	0.58	0.53	0.51	0.50	0.50	0.50	0.49	0.49
Efficiency	[%]	*10	93							
Torsional Rigidity	[Nm/arc-min]	*11	3							
Maximum Torsional Backlash	[arc-min]	--	≤ 4							
Noise Level	dB [A]	*12	≤ 80							
Protection Class	--	*13	IP54 (IP65)							
Ambient Temperature	[°C]	--	0-40							
Permitted Housing Temperature	[°C]	--	90							
Weight	[kg]	*14	1.8							

EVB 060 3-Stage Specifications

Frame Size	**060**									
Ratio	Unit	Note	15	16	20	25	28	30	35	40
Nominal Output Torque	[Nm]	*1	18	26	26	28	28	19	28	28
Maximum Acceleration Torque	[Nm]	*2	38	54	54	54	54	38	54	54
Maximum Torque	[Nm]	*3	38	54	54	54	54	38	54	54
Emergency Stop Torque	[Nm]	*4	65	90	90	90	90	65	90	90
Nominal Input Speed	[rpm]	*5	3800							
Maximum Input Speed	[rpm]	*6	6000							
No Load Running Torque	[Nm]	*7	0.20							
Maximum Radial Load	[N]	*8	1200							
Maximum Axial Load	[N]	*9	1100							
Moment of Inertia (≤ Ø 8)	[kgcm2]	--	0.073	0.079	0.071	0.071	0.077	0.062	0.070	0.061
Moment of Inertia (≤ Ø 14)	[kgcm2]	--	0.118	0.124	0.116	0.115	0.122	0.106	0.115	0.106
Moment of Inertia (≤ Ø 19)	[kgcm2]	--	--	--	--	--			--	--
Efficiency	[%]	*10	88							
Torsional Rigidity	[Nm/arc-min]	*11	3							
Maximum Torsional Backlash	[arc-min]	--	≤ 7							
Noise Level	dB [A]	*12	≤ 80							
Protection Class	--	*13	IP54 (IP65)							
Ambient Temperature	[°C]	--	0-40							
Permitted Housing Temperature	[°C]	--	90							
Weight	[kg]	*14	1.6							

EVB 060 3-Stage Specifications

Frame Size	**060**								
Ratio	Unit	Note	45	50	60	70	80	90	100
Nominal Output Torque	[Nm]	*1	19	28	28	28	28	19	19
Maximum Acceleration Torque	[Nm]	*2	38	54	54	54	54	38	38
Maximum Torque	[Nm]	*3	38	54	54	54	54	38	38
Emergency Stop Torque	[Nm]	*4	65	90	90	90	90	65	65
Nominal Input Speed	[rpm]	*5	3800						
Maximum Input Speed	[rpm]	*6	6000						
No Load Running Torque	[Nm]	*7	0.2						
Maximum Radial Load	[N]	*8	1200						
Maximum Axial Load	[N]	*9	1100						
Moment of Inertia (≤ Ø 8)	[kgcm2]	--	0.070	0.061	0.061	0.061	0.061	0.061	0.061
Moment of Inertia (≤ Ø 14)	[kgcm2]	--	0.115	0.106	0.106	0.105	0.105	0.105	0.105
Moment of Inertia (≤ Ø 19)	[kgcm2]	--	--	--	--	--	--	--	--
Efficiency	[%]	*10	88						
Torsional Rigidity	[Nm/arc-min]	*11	3						
Maximum Torsional Backlash	[arc-min]	--	≤ 7						
Noise Level	dB [A]	*12	≤ 80						
Protection Class	--	*13	IP54 (IP65)						
Ambient Temperature	[°C]	--	0-40						
Permitted Housing Temperature	[°C]	--	90						
Weight	[kg]	*14	1.6						

*1) At nominal input speed, service life is 20,000 hours

*2) The maximum torque when starting or stopping operation. Apply Cycle Factor $\mathbf{f_0}$, found on page 468, for higher duty cycle applications

*3) Permitted 10,000 times during service life. Based on 10% of maximum radial load and smooth output shaft

*4) The maximum torque allowed under a stress situation. Permitted 1,000 times during service life

*5) The average input speed at nominal input torque. Maintain housing temperature below permitted value

*6) The maximum intermittent input speed

*7) Torque at no load applied to the input shaft at nominal input speed

*8) The maximum radial load that the gearbox can accept

*9) The maximum axial load that the gearbox can accept

*10) The efficiency at the nominal output torque rating

*11) This does not include lost motion

*12) Contact Nidec Drive Technology for the testing conditions and environment

*13) Various wash-down options are available. Contact Nidec Drive Technology for more details

*14) Weight may vary slightly between models

EVB 060 2-Stage Dimensions

Input bore size ≦φ8 mm

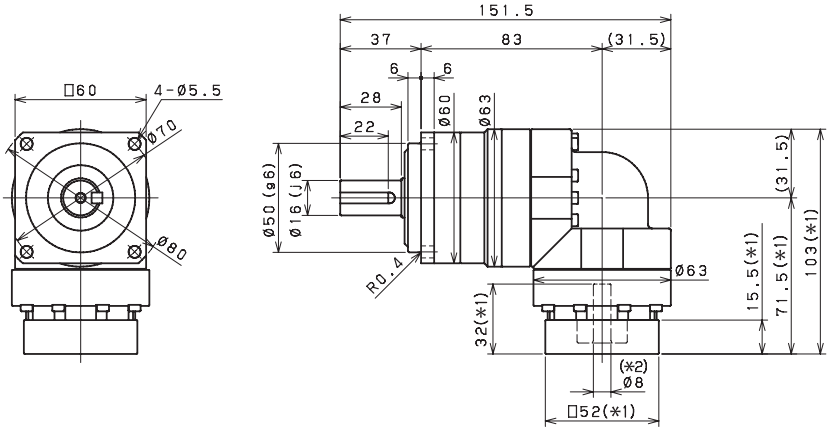

Input bore size ≦φ14 mm

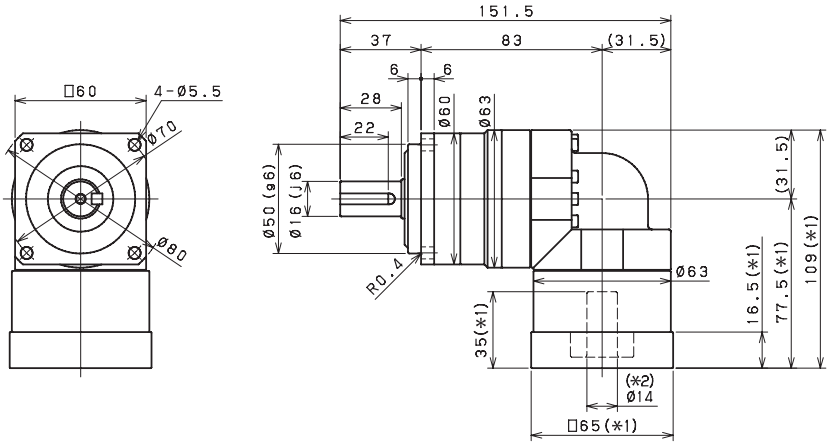

Input bore size ≦φ19 mm

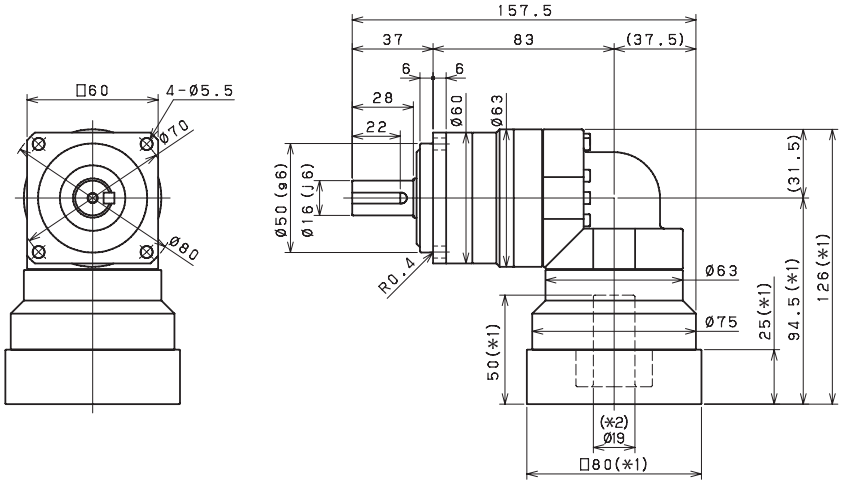

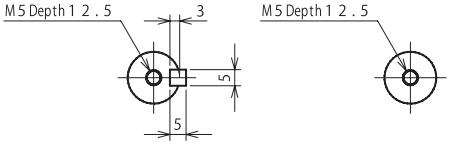

Keyed shaft　　Smooth shaft

*1) Length will vary depending on motor

*2) Bushing will be inserted to adapt to motor shaft

EVB 060 3-Stage Dimensions

Input bore size ≦φ8 mm

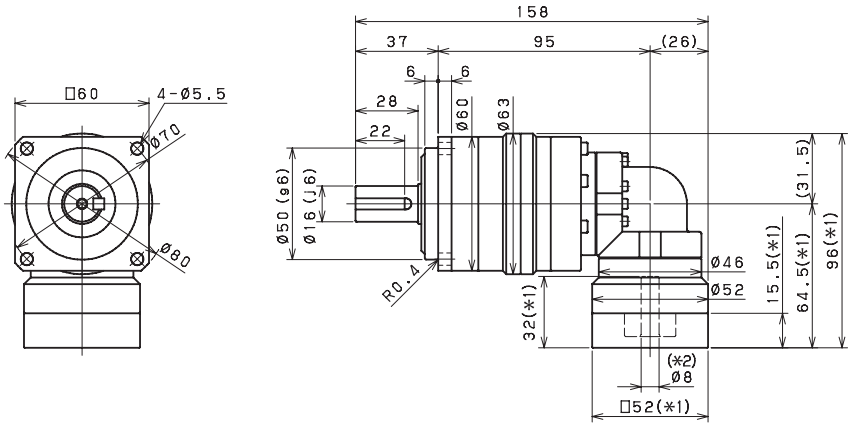

Input bore size ≦φ14 mm

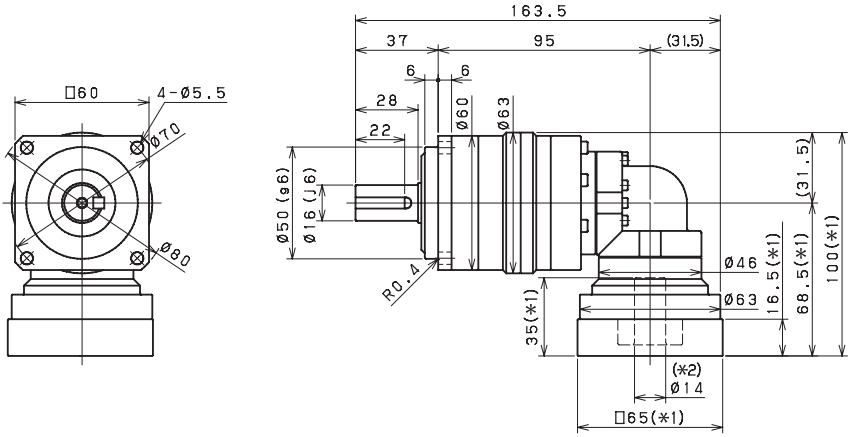

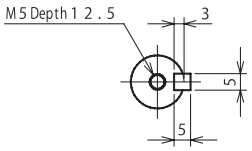

Keyed shaft

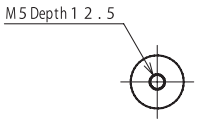

Smooth shaft

*1) Length will vary depending on motor

*2) Bushing will be inserted to adapt to motor shaft

EVB

EVB 090 2-Stage Specifications

Frame Size	**090**									
Ratio	Unit	Note	3	4	5	6	7	8	9	10
Nominal Output Torque	[Nm]	*1	46	61	67	67	67	74	51	51
Maximum Acceleration Torque	[Nm]	*2	77	105	105	105	105	105	78	78
Maximum Torque	[Nm]	*3	90	121	121	119	119	117	93	93
Emergency Stop Torque	[Nm]	*4	130	170	220	220	220	220	170	170
Nominal Input Speed	[rpm]	*5	3000							
Maximum Input Speed	[rpm]	*6	6000							
No Load Running Torque	[Nm]	*7	1.13							
Maximum Radial Load	[N]	*8	2400							
Maximum Axial Load	[N]	*9	2200							
Moment of Inertia (≤ Ø 8)	[kgcm2]	--	--	--	--	--	--	--	--	--
Moment of Inertia (≤ Ø 14)	[kgcm2]	--	2.12	1.89	1.80	1.76	1.73	1.71	1.70	1.69
Moment of Inertia (≤ Ø 19)	[kgcm2]	--	2.45	2.22	2.13	2.09	2.06	2.04	2.03	2.02
Moment of Inertia (≤ Ø 28)	[kgcm2]	--	4.57	4.35	4.26	4.21	4.18	4.17	4.16	4.15
Efficiency	[%]	*10	93							
Torsional Rigidity	[Nm/arc-min]	*11	10							
Maximum Torsional Backlash	[arc-min]	--	≤ 4							
Noise Level	dB [A]	*12	≤ 80							
Protection Class	--	*13	IP54 (IP65)							
Ambient Temperature	[°C]	--	0-40							
Permitted Housing Temperature	[°C]	--	90							
Weight	[kg]	*14	5.1							

EVB 090 3-Stage Specifications

Frame Size	**090**									
Ratio	Unit	Note	15	16	20	25	28	30	35	40
Nominal Output Torque	[Nm]	*1	43	66	68	72	78	47	73	78
Maximum Acceleration Torque	[Nm]	*2	77	128	128	128	128	77	128	128
Maximum Torque	[Nm]	*3	77	128	128	128	128	77	128	128
Emergency Stop Torque	[Nm]	*4	170	220	220	220	220	170	220	220
Nominal Input Speed	[rpm]	*5	3300							
Maximum Input Speed	[rpm]	*6	6000							
No Load Running Torque	[Nm]	*7	0.55							
Maximum Radial Load	[N]	*8	2400							
Maximum Axial Load	[N]	*9	2200							
Moment of Inertia (≤ Ø 8)	[kgcm2]	--	0.34	0.38	0.33	0.32	0.37	0.25	0.32	0.25
Moment of Inertia (≤ Ø 14)	[kgcm2]	--	0.41	0.46	0.40	0.40	0.45	0.33	0.4	0.32
Moment of Inertia (≤ Ø 19)	[kgcm2]	--	0.6	0.65	0.59	0.59	0.64	0.51	0.59	0.51
Moment of Inertia (≤ Ø 28)	[kgcm2]	--	--	--	--	--	--	--	--	--
Efficiency	[%]	*10	88							
Torsional Rigidity	[Nm/arc-min]	*11	10							
Maximum Torsional Backlash	[arc-min]	--	≤ 7							
Noise Level	dB [A]	*12	≤ 80							
Protection Class	--	*13	IP54 (IP65)							
Ambient Temperature	[°C]	--	0-40							
Permitted Housing Temperature	[°C]	--	90							
Weight	[kg]	*14	4.4							

EVB 090 3-Stage Specifications

Frame Size	**090**								
Ratio	Unit	Note	45	50	60	70	80	90	100
Nominal Output Torque	[Nm]	*1	47	73	73	73	78	52	52
Maximum Acceleration Torque	[Nm]	*2	78	128	128	128	128	78	78
Maximum Torque	[Nm]	*3	78	128	128	128	128	78	78
Emergency Stop Torque	[Nm]	*4	170	220	220	220	220	170	170
Nominal Input Speed	[rpm]	*5	3300						
Maximum Input Speed	[rpm]	*6	6000						
No Load Running Torque	[Nm]	*7	0.55						
Maximum Radial Load	[N]	*8	2400						
Maximum Axial Load	[N]	*9	2200						
Moment of Inertia (≤ Ø 8)	[kgcm2]	--	0.32	0.25	0.25	0.25	0.25	0.25	0.25
Moment of Inertia (≤ Ø 14)	[kgcm2]	--	0.39	0.32	0.32	0.32	0.32	0.32	0.32
Moment of Inertia (≤ Ø 19)	[kgcm2]	--	0.58	0.51	0.51	0.51	0.51	0.51	0.51
Moment of Inertia (≤ Ø 28)	[kgcm2]	--	--	--	--	--	--	--	--
Efficiency	[%]	*10	88						
Torsional Rigidity	[Nm/arc-min]	*11	10						
Maximum Torsional Backlash	[arc-min]	--	≤ 7						
Noise Level	dB [A]	*12	≤ 80						
Protection Class	--	*13	IP54 (IP65)						
Ambient Temperature	[°C]	--	0-40						
Permitted Housing Temperature	[°C]	--	90						
Weight	[kg]	*14	4.4						

*1) At nominal input speed, service life is 20,000 hours

*2) The maximum torque when starting or stopping operation. Apply Cycle Factor $\mathbf{f_0}$, found on page 468, for higher duty cycle applications

*3) Permitted 10,000 times during service life. Based on 10% of maximum radial load and smooth output shaft

*4) The maximum torque allowed under a stress situation. Permitted 1,000 times during service life

*5) The average input speed at nominal input torque. Maintain housing temperature below permitted value

*6) The maximum intermittent input speed

*7) Torque at no load applied to the input shaft at nominal input speed

*8) The maximum radial load that the gearbox can accept

*9) The maximum axial load that the gearbox can accept

*10) The efficiency at the nominal output torque rating

*11) This does not include lost motion

*12) Contact Nidec Drive Technology for the testing conditions and environment

*13) Various wash-down options are available. Contact Nidec Drive Technology for more details

*14) Weight may vary slightly between models

EVB 090 2-Stage Dimensions

Input bore size ≦φ14 mm

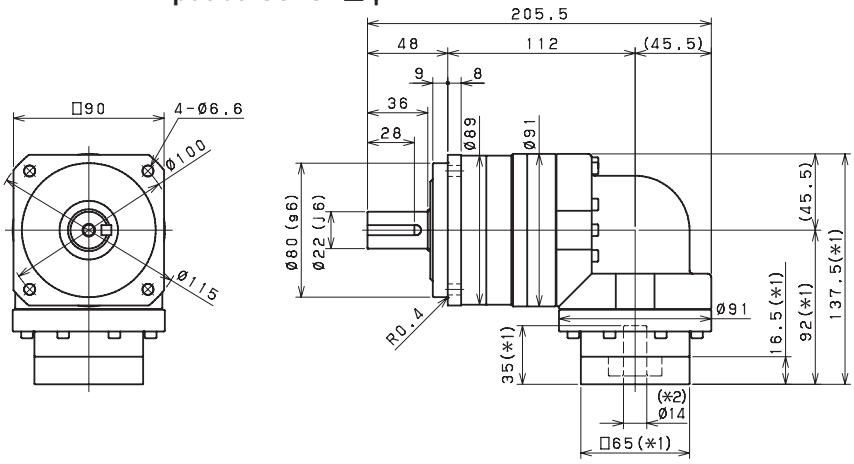

Input bore size ≦φ19 mm

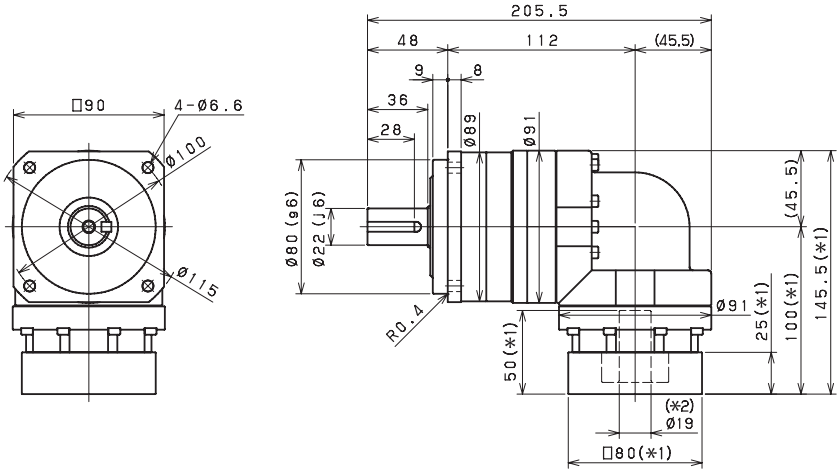

Input bore size ≦φ28 mm

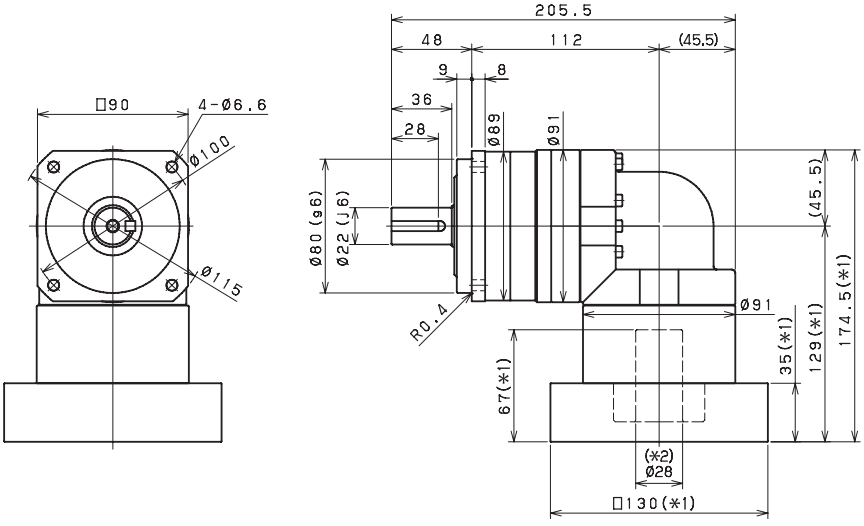

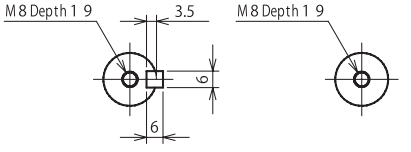

Keyed shaft　　Smooth shaft

*1) Length will vary depending on motor

*2) Bushing will be inserted to adapt to motor shaft

EVB 090 3-Stage Dimensions

Input bore size ≦φ8 mm

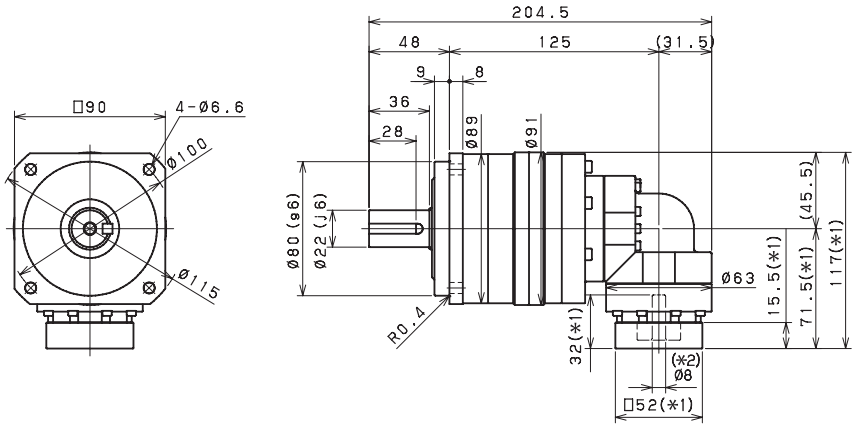

Input bore size ≦φ14 mm

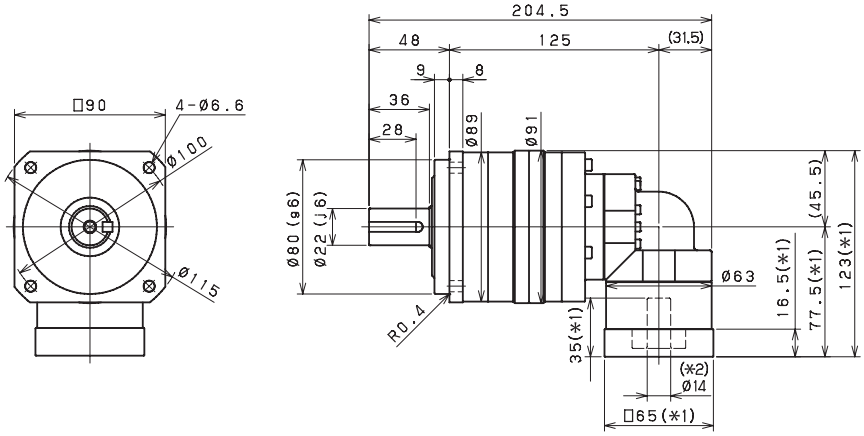

Input bore size ≦φ19 mm

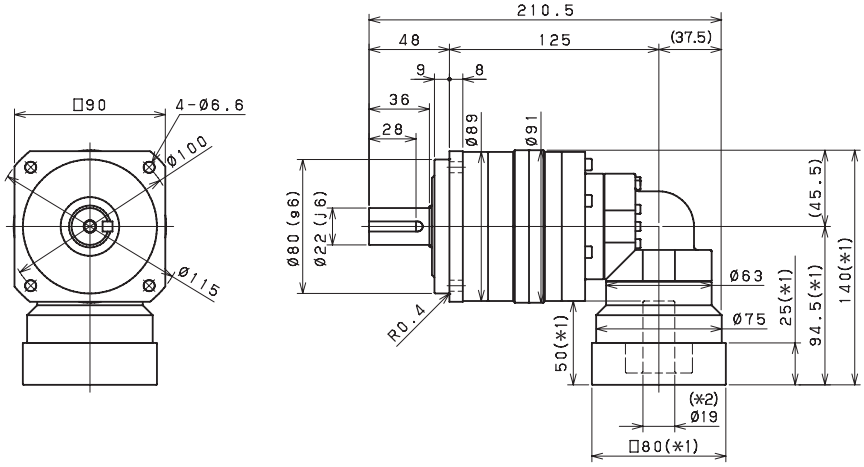

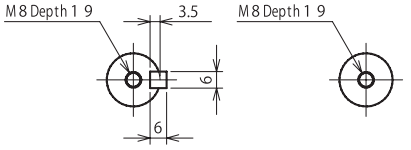

Keyed shaft　　Smooth shaft

*1) Length will vary depending on motor

*2) Bushing will be inserted to adapt to motor shaft

EVB 115 2-Stage Specifications

Frame Size			**115**							
Ratio	Unit	Note	3	4	5	6	7	8	9	10
Nominal Output Torque	[Nm]	*1	77	108	123	154	154	154	128	128
Maximum Acceleration Torque	[Nm]	*2	172	227	272	340	340	340	240	240
Maximum Torque	[Nm]	*3	205	271	325	401	401	401	288	288
Emergency Stop Torque	[Nm]	*4	320	430	500	550	550	550	450	450
Nominal Input Speed	[rpm]	*5	3000							
Maximum Input Speed	[rpm]	*6	6000							
No Load Running Torque	[Nm]	*7	1.88							
Maximum Radial Load	[N]	*8	4300							
Maximum Axial Load	[N]	*9	3900							
Moment of Inertia (≤ Ø 14)	[kgcm2]	--	--	--	--	--	--	--	--	--
Moment of Inertia (≤ Ø 19)	[kgcm2]	--	6.74	5.49	5.02	4.77	4.65	4.55	4.49	4.46
Moment of Inertia (≤ Ø 28)	[kgcm2]	--	8.34	7.08	6.61	6.36	6.24	6.14	6.08	6.05
Moment of Inertia (≤ Ø 38)	[kgcm2]	--	15.41	14.15	13.69	13.43	13.31	13.22	13.16	13.12
Efficiency	[%]	*10	93							
Torsional Rigidity	[Nm/arc-min]	*11	31							
Maximum Torsional Backlash	[arc-min]	--	≤ 4							
Noise Level	dB [A]	*12	≤ 85							
Protection Class	--	*13	IP54 (IP65)							
Ambient Temperature	[°C]	--	0-40							
Permitted Housing Temperature	[°C]	--	90							
Weight	[kg]	*14	10.4							

EVB 115 3-Stage Specifications

Frame Size			**115**							
Ratio	Unit	Note	15	16	20	25	28	30	35	40
Nominal Output Torque	[Nm]	*1	125	136	162	174	174	132	174	172
Maximum Acceleration Torque	[Nm]	*2	229	295	340	340	340	229	340	340
Maximum Torque	[Nm]	*3	229	295	340	340	340	229	340	340
Emergency Stop Torque	[Nm]	*4	450	550	550	550	550	450	550	550
Nominal Input Speed	[rpm]	*5	3100							
Maximum Input Speed	[rpm]	*6	6000							
No Load Running Torque	[Nm]	*7	1.11							
Maximum Radial Load	[N]	*8	3900							
Maximum Axial Load	[N]	*9	3900							
Moment of Inertia (≤ Ø 14)	[kgcm2]	--	2.25	2.46	2.20	2.18	2.40	1.87	2.16	1.86
Moment of Inertia (≤ Ø 19)	[kgcm2]	--	2.58	2.79	2.53	2.51	2.73	2.20	2.49	2.19
Moment of Inertia (≤ Ø 28)	[kgcm2]	--	4.70	4.91	4.65	4.64	4.86	4.33	4.62	4.32
Moment of Inertia (≤ Ø 38)	[kgcm2]	--	--	--	--	--	--	--	--	--
Efficiency	[%]	*10	88							
Torsional Rigidity	[Nm/arc-min]	*11	31							
Maximum Torsional Backlash	[arc-min]	--	≤ 7							
Noise Level	dB [A]	*12	≤ 85							
Protection Class	--	*13	IP54 (IP65)							
Ambient Temperature	[°C]	--	0-40							
Permitted Housing Temperature	[°C]	--	90							
Weight	[kg]	*14	10.1							

EVB 115 3-Stage Specifications

Frame Size	**115**								
Ratio	Unit	Note	45	50	60	70	80	90	100
Nominal Output Torque	[Nm]	*1	132	174	174	174	174	132	132
Maximum Acceleration Torque	[Nm]	*2	240	340	340	340	340	240	240
Maximum Torque	[Nm]	*3	240	340	340	340	340	240	240
Emergency Stop Torque	[Nm]	*4	450	550	550	550	550	450	450
Nominal Input Speed	[rpm]	*5	3100						
Maximum Input Speed	[rpm]	*6	6000						
No Load Running Torque	[Nm]	*7	1.11						
Maximum Radial Load	[N]	*8	4300						
Maximum Axial Load	[N]	*9	3900						
Moment of Inertia (≤ Ø 14)	[kgcm2]	--	2.15	1.86	1.85	1.85	1.85	1.85	1.85
Moment of Inertia (≤ Ø 19)	[kgcm2]	--	2.48	2.19	2.18	2.18	2.18	2.18	2.18
Moment of Inertia (≤ Ø 28)	[kgcm2]	--	4.61	4.31	4.31	4.31	4.31	4.31	4.31
Moment of Inertia (≤ Ø 38)	[kgcm2]	--	--	--	--	--	--	--	--
Efficiency	[%]	*10	88						
Torsional Rigidity	[Nm/arc-min]	*11	31						
Maximum Torsional Backlash	[arc-min]	--	≤ 7						
Noise Level	dB [A]	*12	≤ 85						
Protection Class	--	*13	IP54 (IP65)						
Ambient Temperature	[°C]	--	0-40						
Permitted Housing Temperature	[°C]	--	90						
Weight	[kg]	*14	10.1						

*1) At nominal input speed, service life is 20,000 hours

*2) The maximum torque when starting or stopping operation. Apply Cycle Factor f_0, found on page 468, for higher duty cycle applications

*3) Permitted 10,000 times during service life. Based on 10% of maximum radial load and smooth output shaft

*4) The maximum torque allowed under a stress situation. Permitted 1,000 times during service life

*5) The average input speed at nominal input torque. Maintain housing temperature below permitted value

*6) The maximum intermittent input speed

*7) Torque at no load applied to the input shaft at nominal input speed

*8) The maximum radial load that the gearbox can accept

*9) The maximum axial load that the gearbox can accept

*10) The efficiency at the nominal output torque rating

*11) This does not include lost motion

*12) Contact Nidec Drive Technology for the testing conditions and environment

*13) Various wash-down options are available. Contact Nidec Drive Technology for more details

*14) Weight may vary slightly between models

EVB 115 2-Stage Dimensions

Input bore size ≦φ19 mm

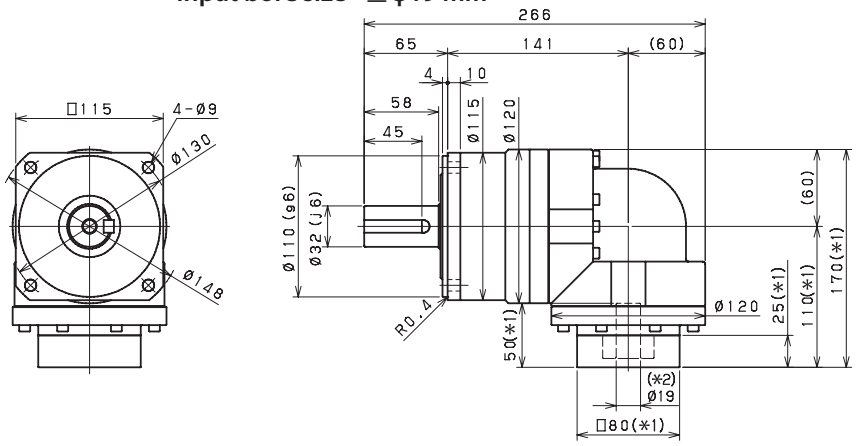

Input bore size ≦φ28 mm

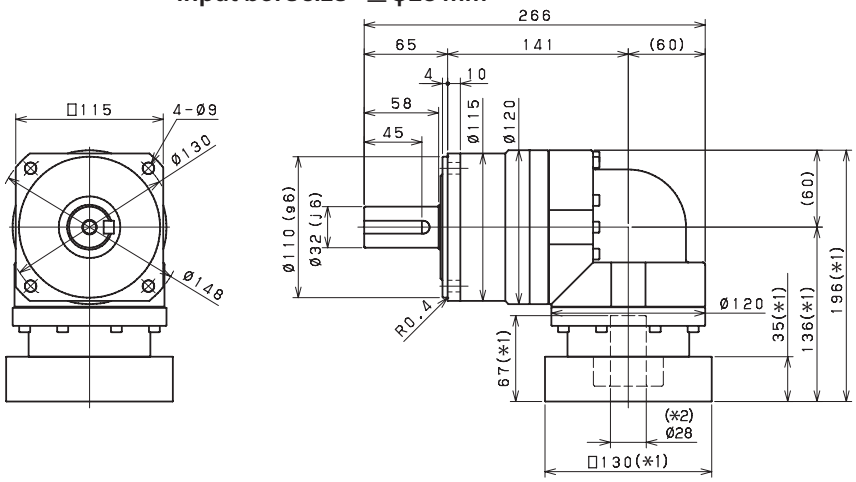

Input bore size ≦φ38 mm

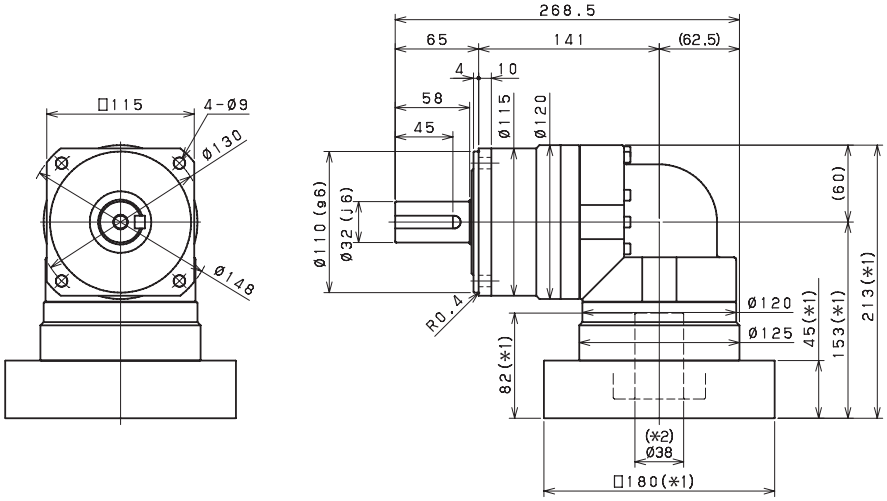

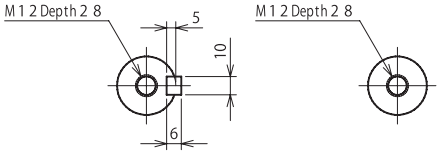

Keyed shaft　　Smooth shaft

*1) Length will vary depending on motor

*2) Bushing will be inserted to adapt to motor shaft

EVB 115 3-Stage Dimensions

Input bore size ≦φ14 mm

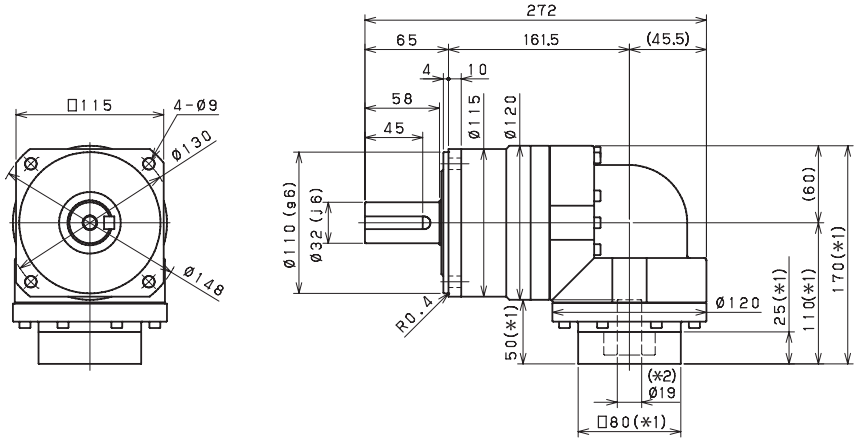

Input bore size ≦φ19 mm

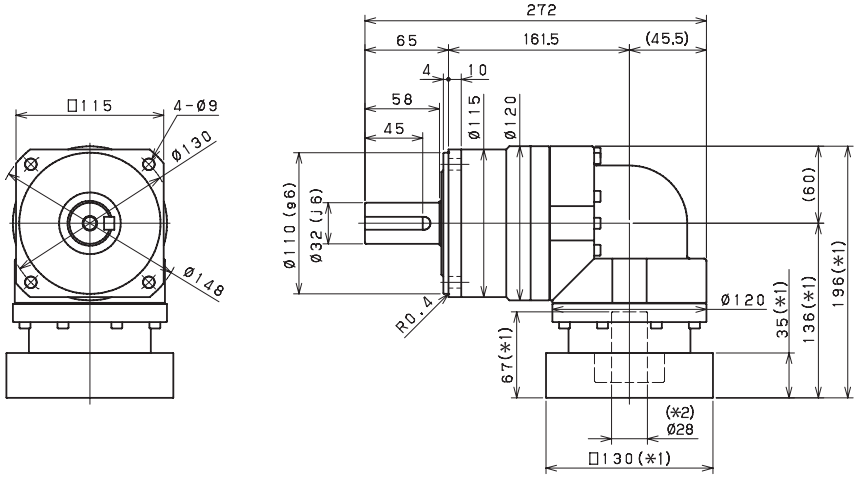

Input bore size ≦φ28 mm

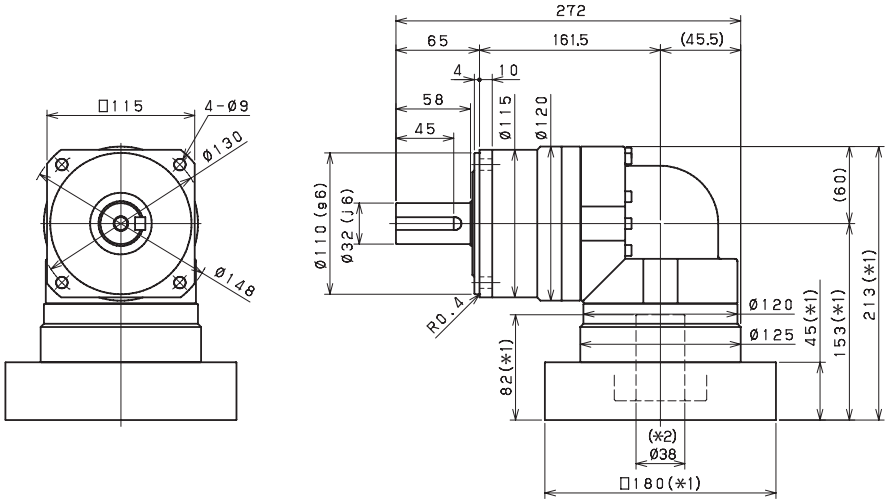

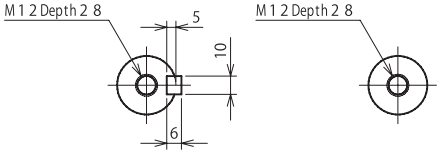

Keyed shaft　　Smooth shaft

*1) Length will vary depending on motor

*2) Bushing will be inserted to adapt to motor shaft

EVB 140 2-Stage Specifications

Frame Size	**140**									
Ratio	Unit	Note	3	4	5	6	7	8	9	10
Nominal Output Torque	[Nm]	*1	132	181	205	266	307	307	233	233
Maximum Acceleration Torque	[Nm]	*2	296	389	458	595	687	687	480	480
Maximum Torque	[Nm]	*3	329	452	531	664	766	766	559	559
Emergency Stop Torque	[Nm]	*4	700	950	1100	1100	1100	1100	750	750
Nominal Input Speed	[rpm]	*5	2000							
Maximum Input Speed	[rpm]	*6	4000							
No Load Running Torque	[Nm]	*7	3.26							
Maximum Radial Load	[N]	*8	9100							
Maximum Axial Load	[N]	*9	8200							
Moment of Inertia (≤ Ø 19)	[kgcm2]	--	--	--	--	--	--	--	--	--
Moment of Inertia (≤ Ø 28)	[kgcm2]	--	23.13	18.57	16.91	16.01	15.58	15.23	14.77	14.66
Moment of Inertia (≤ Ø 38)	[kgcm2]	--	27.50	22.94	21.28	20.38	19.95	19.61	19.41	19.03
Moment of Inertia (≤ Ø 48)	[kgcm2]	--	40.73	36.17	34.51	33.61	33.18	32.84	32.37	32.26
Efficiency	[%]	*10	93							
Torsional Rigidity	[Nm/arc-min]	*11	60							
Maximum Torsional Backlash	[arc-min]	--	≤ 4							
Noise Level	dB [A]	*12	≤ 85							
Protection Class	--	*13	IP54 (IP65)							
Ambient Temperature	[°C]	--	0-40							
Permitted Housing Temperature	[°C]	--	90							
Weight	[kg]	*14	19.1							

EVB 140 3-Stage Specifications

Frame Size	**140**									
Ratio	Unit	Note	15	16	20	25	28	30	35	40
Nominal Output Torque	[Nm]	*1	230	307	316	352	352	240	352	337
Maximum Acceleration Torque	[Nm]	*2	456	687	687	687	687	456	687	687
Maximum Torque	[Nm]	*3	456	687	687	687	687	456	687	687
Emergency Stop Torque	[Nm]	*4	750	1100	1100	1100	1100	750	1100	1100
Nominal Input Speed	[rpm]	*5	2300							
Maximum Input Speed	[rpm]	*6	4000							
No Load Running Torque	[Nm]	*7	2.56							
Maximum Radial Load	[N]	*8	9100							
Maximum Axial Load	[N]	*9	8200							
Moment of Inertia (≤ Ø 19)	[kgcm2]	--	6.40	7.29	6.22	6.15	7.09	4.99	6.09	4.95
Moment of Inertia (≤ Ø 28)	[kgcm2]	--	8	8.88	7.81	7.75	8.68	6.58	7.69	6.54
Moment of Inertia (≤ Ø 38)	[kgcm2]	--	15.07	15.96	14.89	14.82	15.76	13.66	14.76	13.61
Moment of Inertia (≤ Ø 48)	[kgcm2]	--	--	--	--	--	--	--	--	--
Efficiency	[%]	*10	88							
Torsional Rigidity	[Nm/arc-min]	*11	60							
Maximum Torsional Backlash	[arc-min]	--	≤ 7							
Noise Level	dB [A]	*12	≤ 85							
Protection Class	--	*13	IP54 (IP65)							
Ambient Temperature	[°C]	--	0-40							
Permitted Housing Temperature	[°C]	--	90							
Weight	[kg]	*14	19.6							

EVB 140 3-Stage Specifications

Frame Size	**140**								
Ratio	Unit	Note	45	50	60	70	80	90	100
Nominal Output Torque	[Nm]	*1	240	352	352	352	352	240	240
Maximum Acceleration Torque	[Nm]	*2	480	687	687	687	687	480	480
Maximum Torque	[Nm]	*3	480	687	687	687	687	480	480
Emergency Stop Torque	[Nm]	*4	750	1100	1100	1100	1100	750	750
Nominal Input Speed	[rpm]	*5	2300						
Maximum Input Speed	[rpm]	*6	4000						
No Load Running Torque	[Nm]	*7	2.56						
Maximum Radial Load	[N]	*8	9100						
Maximum Axial Load	[N]	*9	8200						
Moment of Inertia (≤ Ø 19)	[kgcm2]	--	6.07	4.93	4.92	4.91	4.91	4.91	4.91
Moment of Inertia (≤ Ø 28)	[kgcm2]	--	7.66	6.52	6.51	6.51	6.50	6.50	6.50
Moment of Inertia (≤ Ø 38)	[kgcm2]	--	14.74	13.59	13.59	13.58	13.58	13.57	13.57
Moment of Inertia (≤ Ø 48)	[kgcm2]	--	--	--	--	--	--	--	--
Efficiency	[%]	*10	88						
Torsional Rigidity	[Nm/arc-min]	*11	60						
Maximum Torsional Backlash	[arc-min]	--	≤ 7						
Noise Level	dB [A]	*12	≤ 85						
Protection Class	--	*13	IP54 (IP65)						
Ambient Temperature	[°C]	--	0-40						
Permitted Housing Temperature	[°C]	--	90						
Weight	[kg]	*14	19.6						

*1) At nominal input speed, service life is 20,000 hours

*2) The maximum torque when starting or stopping operation. Apply Cycle Factor f_0, found on page 468, for higher duty cycle applications

*3) Permitted 10,000 times during service life. Based on 10% of maximum radial load and smooth output shaft

*4) The maximum torque allowed under a stress situation. Permitted 1,000 times during service life

*5) The average input speed at nominal input torque. Maintain housing temperature below permitted value

*6) The maximum intermittent input speed

*7) Torque at no load applied to the input shaft at nominal input speed

*8) The maximum radial load that the gearbox can accept

*9) The maximum axial load that the gearbox can accept

*10) The efficiency at the nominal output torque rating

*11) This does not include lost motion

*12) Contact Nidec Drive Technology for the testing conditions and environment

*13) Various wash-down options are available. Contact Nidec Drive Technology for more details

*14) Weight may vary slightly between models

EVB 140 2-Stage Dimensions

Input bore size ≦φ28 mm

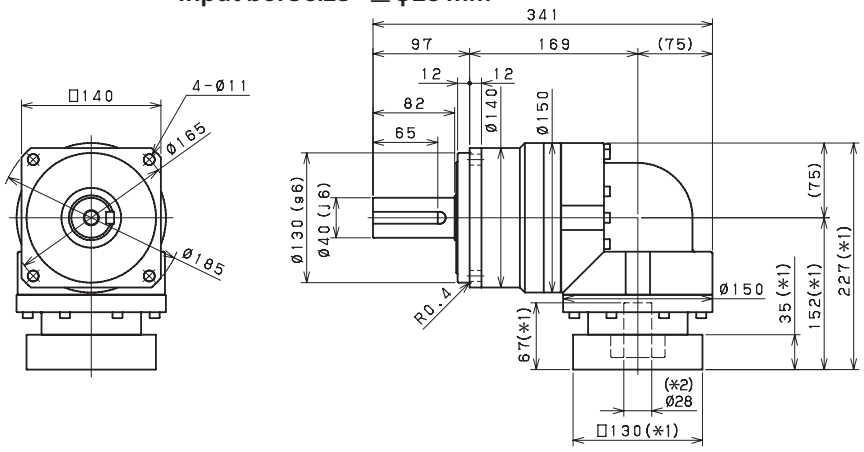

Input bore size ≦φ38 mm

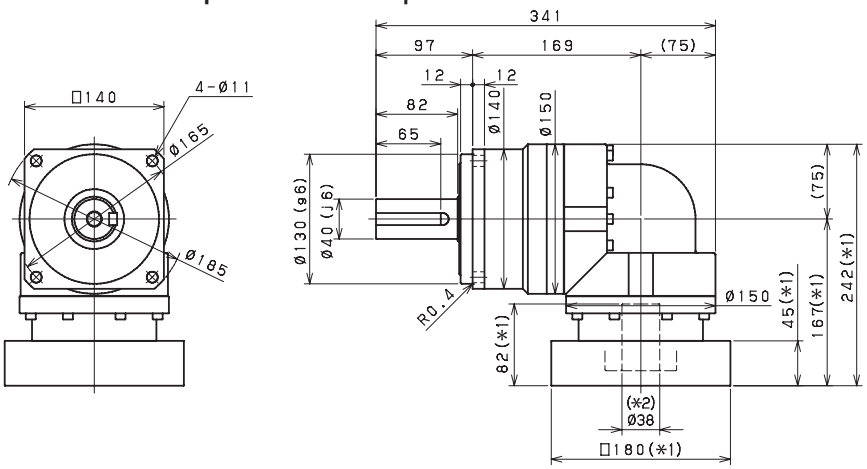

Input bore size ≦φ48 mm

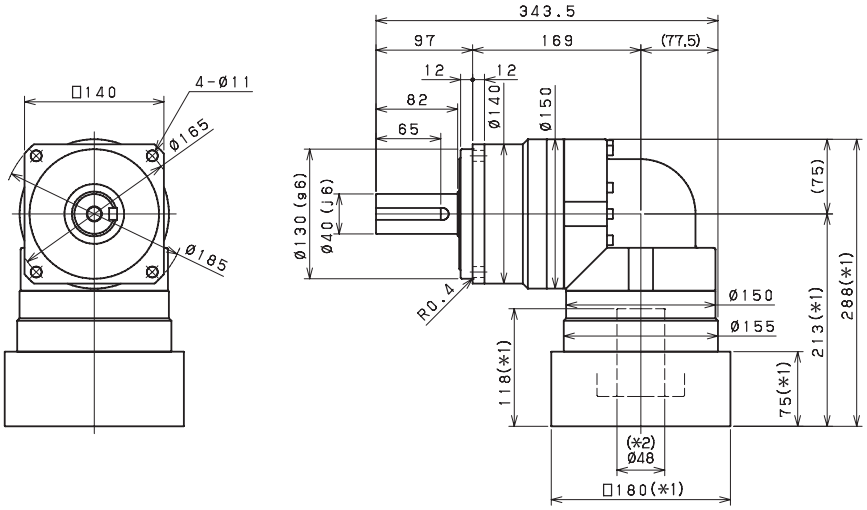

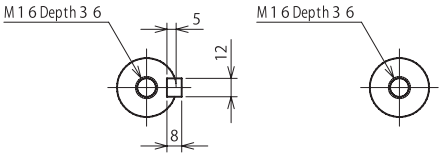

Keyed shaft　　Smooth shaft

*1) Length will vary depending on motor

*2) Bushing will be inserted to adapt to motor shaft

EVB 140 3-Stage Dimensions

Input bore size ≦φ19 mm

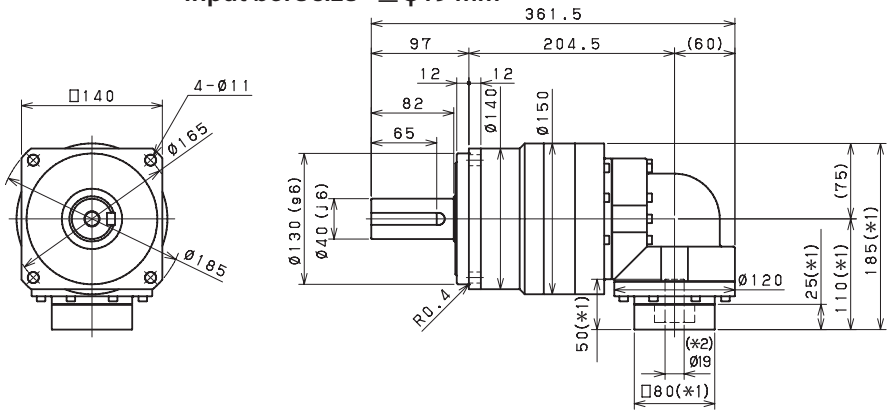

Input bore size ≦φ28 mm

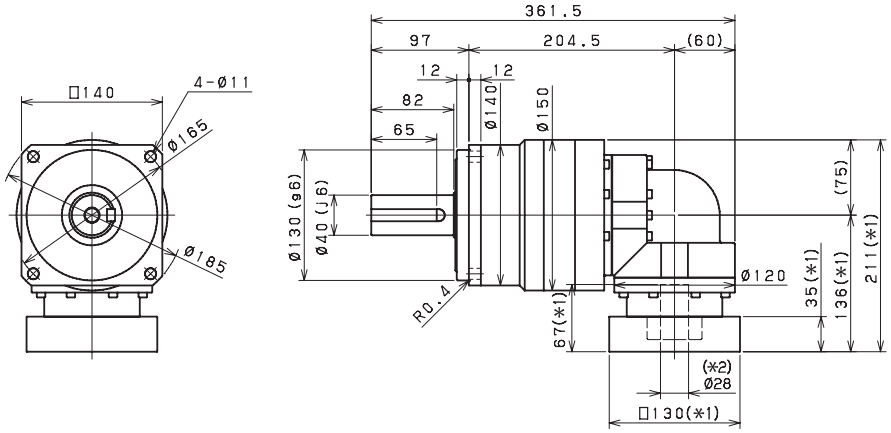

Input bore size ≦φ38 mm

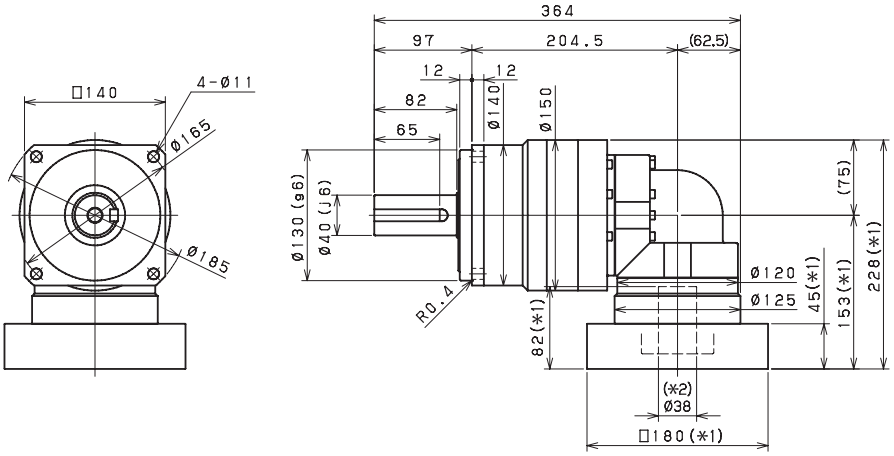

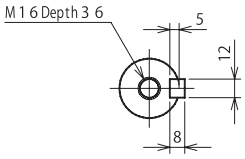

Keyed shaft

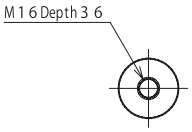

Smooth shaft

*1) Length will vary depending on motor

*2) Bushing will be inserted to adapt to motor shaft

EVB 180 2-Stage Specifications

Frame Size	**180**									
Ratio	Units	Note	3	4	5	6	7	8	9	10
Nominal Output Torque	[Nm]	*1	421	604	646	646	646	646	478	478
Maximum Acceleration Torque	[Nm]	*2	679	904	1127	1315	1315	1315	931	931
Maximum Torque	[Nm]	*3	750	1064	1327	1498	1498	1498	1144	1144
Emergency Stop Torque	[Nm]	*4	1300	1700	2000	2500	2500	2500	2000	2000
Nominal Input Speed	[rpm]	*5	1500							
Maximum Input Speed	[rpm]	*6	4000							
No Load Running Torque	[Nm]	*7	10.8							
Maximum Radial Load	[N]	*8	15000							
Maximum Axial Load	[N]	*9	14000							
Moment of Inertia (≤Ø 28)	[kgcm2]	--	--	--	--	--	--	--	--	--
Moment of Inertia (≤Ø 38)	[kgcm2]	--	93.71	77.72	71.89	68.74	66.43	65.27	64.6	64.28
Moment of Inertia (≤ Ø 48)	[kgcm2]	--	128.6	112.6	106.8	103.6	101.3	100.1	99.46	99.14
Moment of Inertia (≤ Ø 65)	[kgcm2]	--	214.2	198.2	192.4	189.2	186.9	185.7	185.1	184.7
Efficiency	[%]	*10	93							
Torsional Rigidity	[Nm/arcmin]	*11	175							
Maximum Torsional Backlash	[Arc-min]	--	≤ 6							
Noise Level	dB [A]	*12	≤ 85							
Protection Class	--	*13	IP54 (IP65)							
Ambient Temperature	[°C]	--	0-40							
Permitted Housing Temperature	[°C]	--	90							
Weight	[kg]	*14	49							

EVB 180 3-Stage Specifications

Frame Size	**180**									
Ratio	Units	Note	15	16	20	25	28	30	35	40
Nominal Output Torque	[Nm]	*1	442	583	646	683	710	480	710	465
Maximum Acceleration Torque	[Nm]	*2	916	1315	1315	1315	1315	916	1315	1315
Maximum Torque	[Nm]	*3	916	1315	1315	1315	1315	916	1315	1315
Emergency Stop Torque	[Nm]	*4	2000	2500	2500	2500	2500	2000	2500	2500
Nominal Input Speed	[rpm]	*5	2100							
Maximum Input Speed	[rpm]	*6	4000							
No Load Running Torque	[Nm]	*7	4.7							
Maximum Radial Load	[N]	*8	15000							
Maximum Axial Load	[N]	*9	14000							
Moment of Inertia (≤Ø 28)	[kgcm2]	--	11.49	12.09	11.15	10.98	11.59	10.33	10.83	10.24
Moment of Inertia (≤Ø 38)	[kgcm2]	--	20.28	20.88	19.94	19.77	20.38	19.11	19.62	19.03
Moment of Inertia (≤ Ø 48)	[kgcm2]	--	25.1	25.7	24.76	24.59	25.20	23.94	24.44	23.85
Moment of Inertia (≤ Ø 65)	[kgcm2]	--			--	--	--	--	--	--
Efficiency	[%]	*10	88							
Torsional Rigidity	[Nm/arcmin]	*11	175							
Maximum Torsional Backlash	[Arc-min]	--	≤ 9							
Noise Level	dB [A]	*12	≤ 85							
Protection Class	--	*13	IP54 (IP65)							
Ambient Temperature	[°C]	--	0-40							
Permitted Housing Temperature	[°C]	--	90							
Weight	[kg]	*14	36							

EVB 180 3-Stage Specifications

Frame Size	**180**								
Ratio	Units	Note	45	50	60	70	80	90	100
Nominal Output Torque	[Nm]	*1	480	710	710	710	710	480	480
Maximum Acceleration Torque	[Nm]	*2	931	1315	1315	1315	1315	931	931
Maximum Torque	[Nm]	*3	931	1315	1315	1315	1315	931	931
Emergency Stop Torque	[Nm]	*4	2000	2500	2500	2500	2500	2000	2000
Nominal Input Speed	[rpm]	*5	2100						
Maximum Input Speed	[rpm]	*6	4000						
No Load Running Torque	[Nm]	*7	4.7						
Maximum Radial Load	[N]	*8	15000						
Maximum Axial Load	[N]	*9	14000						
Moment of Inertia (≤Ø 28)	[kgcm2]	--	10.76	10.2	10.18	10.16	10.15	10.15	10.14
Moment of Inertia (≤Ø 38)	[kgcm2]	--	19.55	18.99	18.96	18.95	18.94	18.93	18.93
Moment of Inertia (≤ Ø 48)	[kgcm2]	--	24.37	23.81	23.78	23.77	23.76	23.75	23.75
Moment of Inertia (≤ Ø 65)	[kgcm2]	--	--	--	--	--	--	--	--
Efficiency	[%]	*10	88						
Torsional Rigidity	[Nm/arcmin]	*11	175						
Maximum Torsional Backlash	[Arc-min]	--	≤ 9						
Noise Level	dB [A]	*12	≤ 85						
Protection Class	--	*13	IP54 (IP65)						
Ambient Temperature	[°C]	--	0-40						
Permitted Housing Temperature	[°C]	--	90						
Weight	[kg]	*14	36						

*1) At nominal input speed, service life is 20,000 hours

*2) The maximum torque when starting or stopping operation. Apply Cycle Factor f_0, found on page 468, for higher duty cycle applications

*3) Permitted 10,000 times during service life. Based on 10% of maximum radial load and smooth output shaft

*4) The maximum torque allowed under a stress situation. Permitted 1,000 times during service life

*5) The average input speed at nominal input torque. Maintain housing temperature below permitted value

*6) The maximum intermittent input speed

*7) Torque at no load applied to the input shaft at nominal input speed

*8) The maximum radial load that the gearbox can accept

*9) The maximum axial load that the gearbox can accept

*10) The efficiency at the nominal output torque rating

*11) This does not include lost motion

*12) Contact Nidec Drive Technology for the testing conditions and environment

*13) Various wash-down options are available. Contact Nidec Drive Technology for more details

*14) Weight may vary slightly between models

EVB 180 2-Stage Dimensions

Input bore size ≦φ38 mm

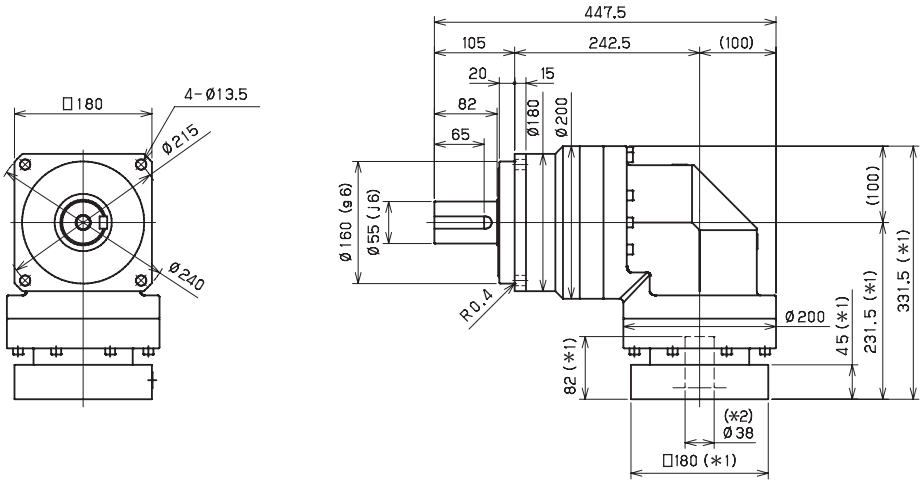

Input bore size ≦φ48 mm

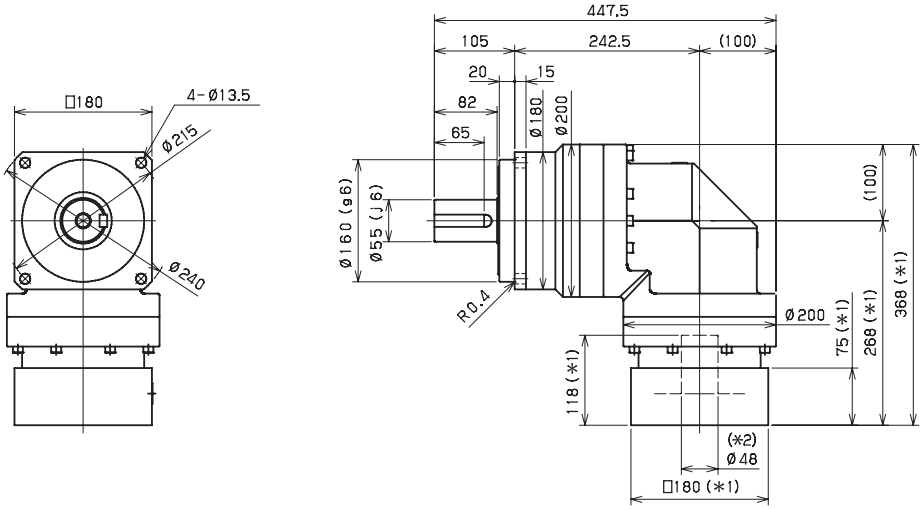

Input bore size ≦φ65 mm

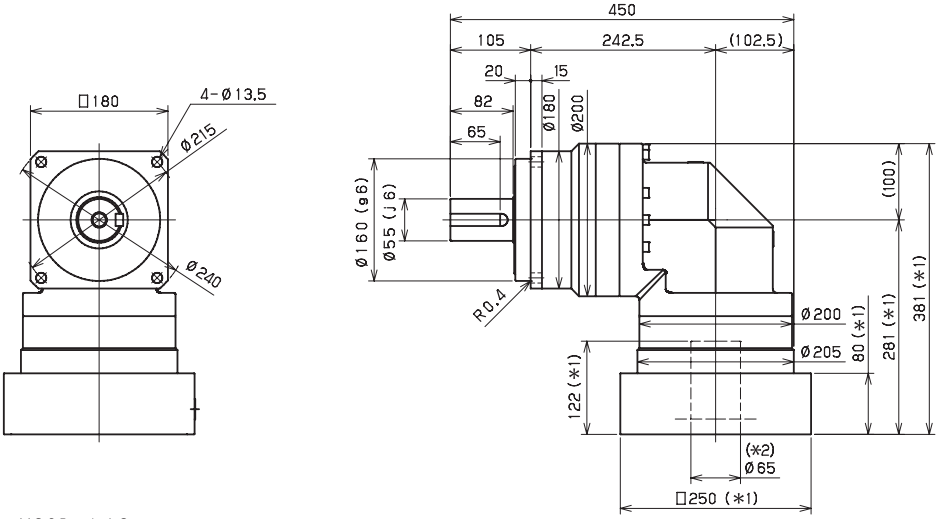

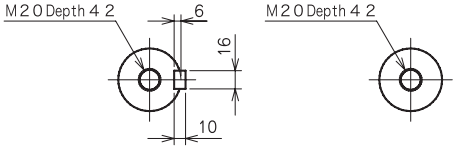

Keyed shaft　　Smooth shaft

*1) Length will vary depending on motor

*2) Bushing will be inserted to adapt to motor shaft

EVB 180 3-Stage Dimensions

Input bore size ≦φ28 mm

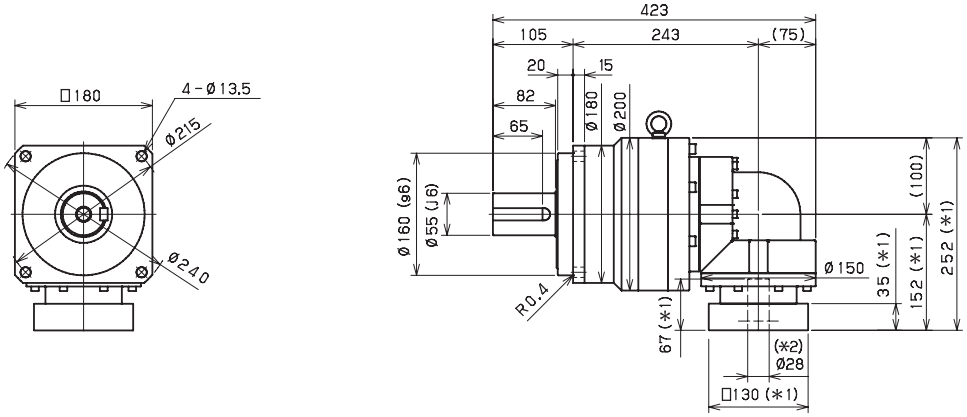

Input bore size ≦φ38 mm

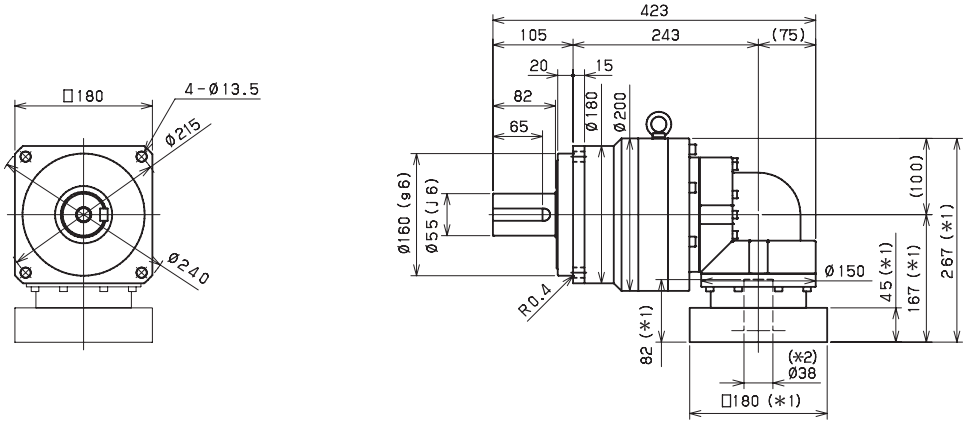

Input bore size ≦φ48 mm

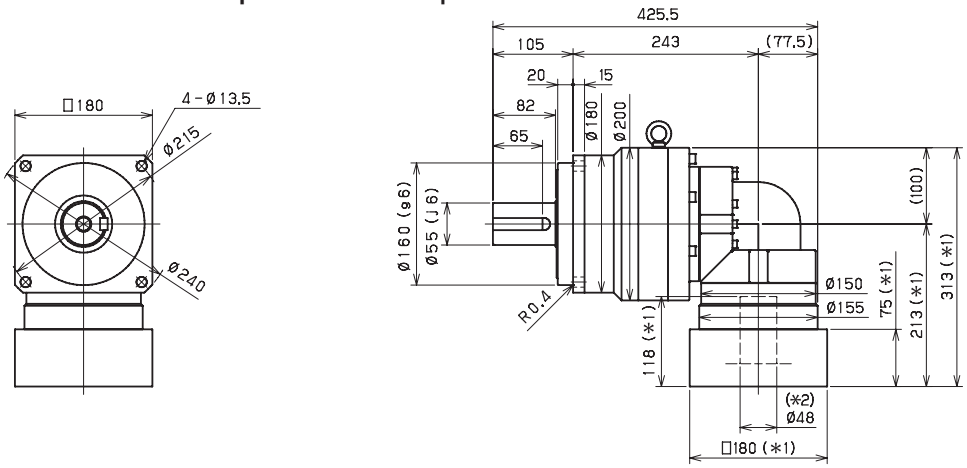

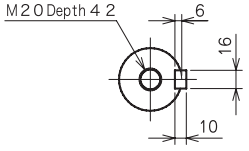

Keyed shaft

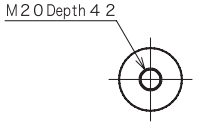

Smooth shaft

*1) Length will vary depending on motor

*2) Bushing will be inserted to adapt to motor shaft

EVB 220 2-Stage Specifications

Frame Size	**220**									
Ratio	Units	Note	3	4	5	6	7	8	9	10
Nominal Output Torque	[Nm]	*1	575	765	960	1208	1313	1313	1064	1064
Maximum Acceleration Torque	[Nm]	*2	1160	1555	1945	2112	2112	2063	1812	1529
Maximum Torque	[Nm]	*3	1336	1861	2328	2441	2441	2339	2032	1787
Emergency Stop Torque	[Nm]	*4	2500	3300	4000	4500	4500	4500	3600	3600
Nominal Input Speed	[rpm]	*5	1200							
Maximum Input Speed	[rpm]	*6	3000							
No Load Running Torque	[Nm]	*7	14.5							
Maximum Radial Load	[N]	*8	15000							
Maximum Axial Load	[N]	*9	14000							
Moment of Inertia (≤Ø 38)	[kgcm2]	--	--	--	--	--	--	--	--	--
Moment of Inertia (≤Ø 48)	[kgcm2]	--	148.0	122.9	113.3	108.1	104.7	102.7	101.6	101.0
Moment of Inertia (≤ Ø 65)	[kgcm2]	--	223.2	198.1	188.6	183.3	180.0	178.0	176.8	176.2
Efficiency	[%]	*10	93							
Torsional Rigidity	[Nm/arcmin]	*11	400							
Maximum Torsional Backlash	[Arc-min]	--	≤ 6							
Noise Level	dB [A]	*12	≤ 85							
Protection Class	--	*13	IP54 (IP65)							
Ambient Temperature	[°C]	--	0-40							
Permitted Housing Temperature	[°C]	--	90							
Weight	[kg]	*14	66							

EVB 220 3-Stage Specifications

Frame Size	**220**									
Ratio	Units	Note	15	16	20	25	28	30	35	40
Nominal Output Torque	[Nm]	*1	858	1200	1200	1360	1440	948	1440	1440
Maximum Acceleration Torque	[Nm]	*2	1463	2112	2112	2112	2112	1463	2112	2112
Maximum Torque	[Nm]	*3	1463	2112	2112	2112	2112	1463	2112	2112
Emergency Stop Torque	[Nm]	*4	3600	4500	4500	4500	4500	3600	4500	4500
Nominal Input Speed	[rpm]	*5	1500							
Maximum Input Speed	[rpm]	*6	3000							
No Load Running Torque	[Nm]	*7	10.2							
Maximum Radial Load	[N]	*8	15000							
Maximum Axial Load	[N]	*9	14000							
Moment of Inertia (≤Ø 38)	[kgcm2]	--	36.32	37.24	35.75	35.47	36.39	34.39	35.21	34.25
Moment of Inertia (≤Ø 48)	[kgcm2]	--	66.14	67.06	65.57	65.28	66.21	64.21	65.03	64.07
Moment of Inertia (≤ Ø 65)	[kgcm2]	--	--	--	--	--	--	--	--	--
Efficiency	[%]	*10	88							
Torsional Rigidity	[Nm/arcmin]	*11	400							
Maximum Torsional Backlash	[Arc-min]	--	≤ 9							
Noise Level	dB [A]	*12	≤ 85							
Protection Class	--	*13	IP54 (IP65)							
Ambient Temperature	[°C]	--	0-40							
Permitted Housing Temperature	[°C]	--	90							
Weight	[kg]	*14	67							

EVB 220 3-Stage Specifications

Frame Size	**220**								
Ratio	Units	Note	45	50	60	70	80	90	100
Nominal Output Torque	[Nm]	*1	948	1440	1440	1440	1440	948	948
Maximum Acceleration Torque	[Nm]	*2	1246	2112	2112	2112	1728	1246	1131
Maximum Torque	[Nm]	*3	1246	2112	2112	2112	1728	1246	1131
Emergency Stop Torque	[Nm]	*4	3600	4500	4500	4500	4500	3600	3600
Nominal Input Speed	[rpm]	*5	1500						
Maximum Input Speed	[rpm]	*6	3000						
No Load Running Torque	[Nm]	*7	10.2						
Maximum Radial Load	[N]	*8	15000						
Maximum Axial Load	[N]	*9	14000						
Moment of Inertia (≤Ø 38)	[kgcm2]	--	35.10	34.18	34.14	34.11	34.1	34.09	34.08
Moment of Inertia (≤Ø 48)	[kgcm2]	--	64.92	63.99	63.95	63.93	63.91	63.90	63.90
Moment of Inertia (≤ Ø 65)	[kgcm2]	--	--	--	--	--	--	--	--
Efficiency	[%]	*10	88						
Torsional Rigidity	[Nm/arcmin]	*11	400						
Maximum Torsional Backlash	[Arc-min]	--	≤ 9						
Noise Level	dB [A]	*12	≤ 85						
Protection Class	--	*13	IP54 (IP65)						
Ambient Temperature	[°C]	--	0-40						
Permitted Housing Temperature	[°C]	--	90						
Weight	[kg]	*14	67						

*1) At nominal input speed, service life is 20,000 hours

*2) The maximum torque when starting or stopping operation. Apply Cycle Factor f_0, found on page 468, for higher duty cycle applications

*3) Permitted 10,000 times during service life. Based on 10% of maximum radial load and smooth output shaft

*4) The maximum torque allowed under a stress situation. Permitted 1,000 times during service life

*5) The average input speed at nominal input torque. Maintain housing temperature below permitted value

*6) The maximum intermittent input speed

*7) Torque at no load applied to the input shaft at nominal input speed

*8) The maximum radial load that the gearbox can accept

*9) The maximum axial load that the gearbox can accept

*10) The efficiency at the nominal output torque rating

*11) This does not include lost motion

*12) Contact Nidec Drive Technology for the testing conditions and environment

*13) Various wash-down options are available. Contact Nidec Drive Technology for more details

*14) Weight may vary slightly between models

EVB 220 2-Stage Dimensions

Input bore size ≦φ48 mm

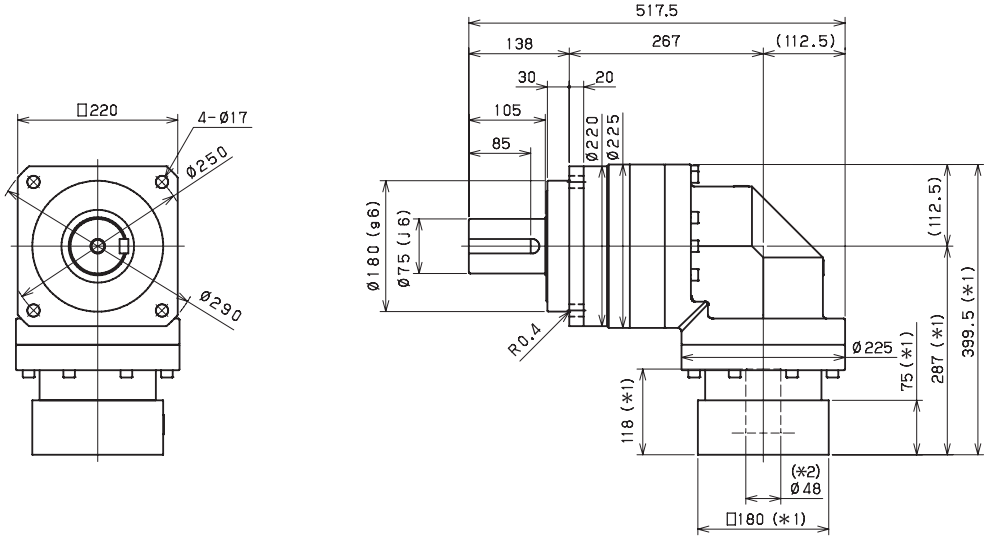

Input bore size ≦φ65 mm

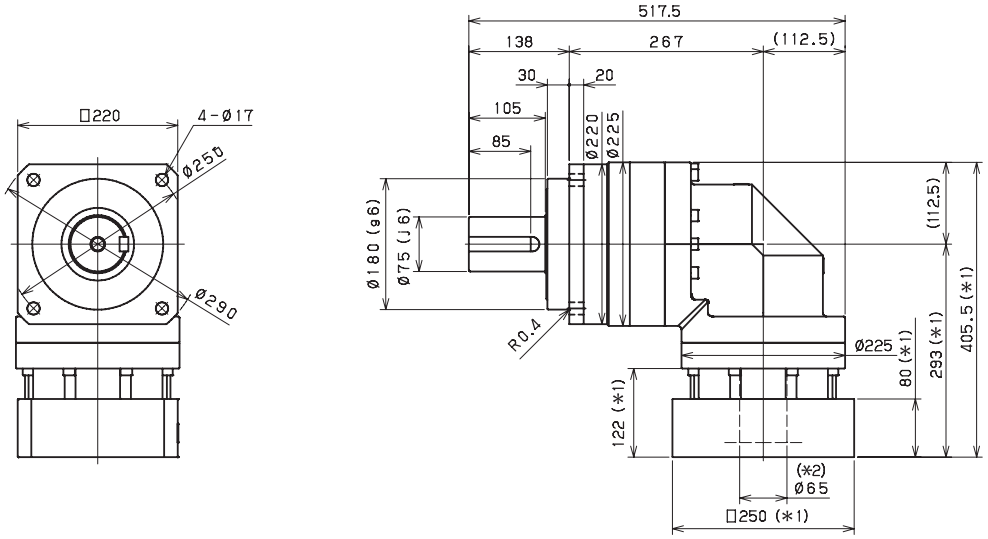

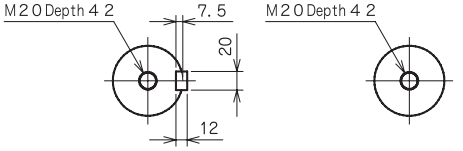

Keyed shaft　　Smooth shaft

*1) Length will vary depending on motor

*2) Bushing will be inserted to adapt to motor shaft

EVB 220 3-Stage Dimensions

Input bore size ≦φ38 mm

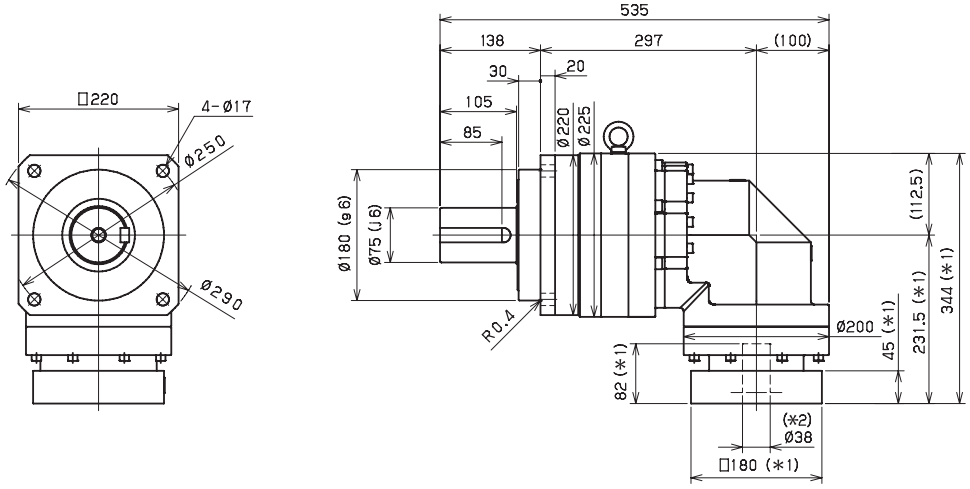

Input bore size ≦φ48 mm

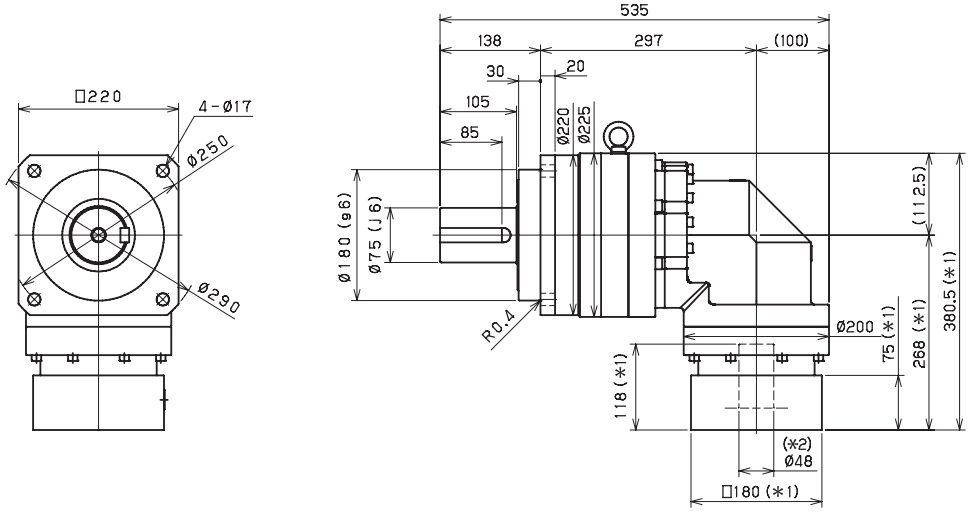

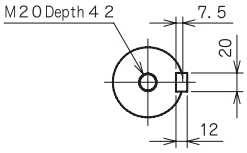

Keyed shaft

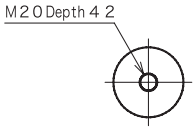

Smooth shaft

*1) Length will vary depending on motor

*2) Bushing will be inserted to adapt to motor shaft

EVB

EVS SERIES

The EVS series is the right angle equivalent to the VRS. Compact and precise, the EVS is the ideal solution for demanding positioning accuracy and speed requirements. Equipped with two rows of robust tapered roller bearings, the EVS runs smoothly and quietly even with the most challenging dynamic and static forces.

The EVS comes with ≤4 arc-min backlash, to handle dynamic machine tool and robotic applications with ease. With maximum acceleration torques up to 2960Nm, this product is an excellent partner to higher capacity servomotor models. Our customers specify this product when the industry standard is simply not good enough.

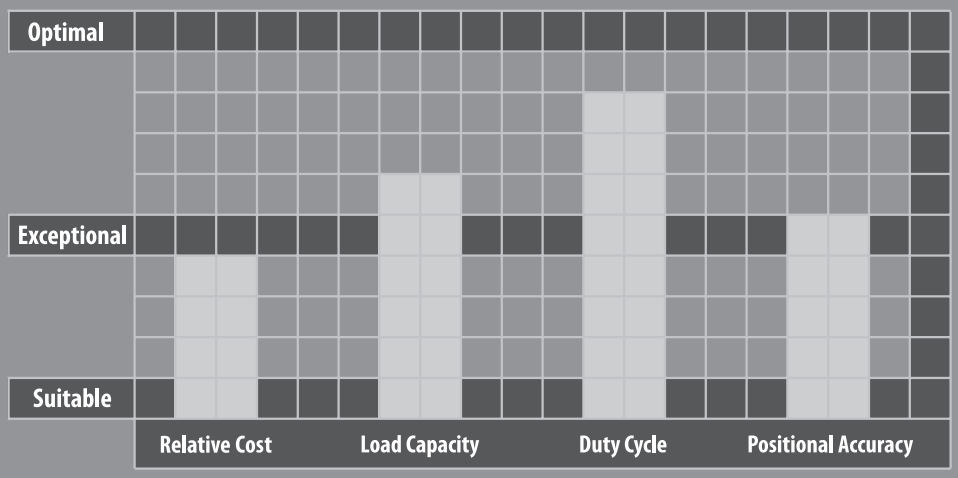

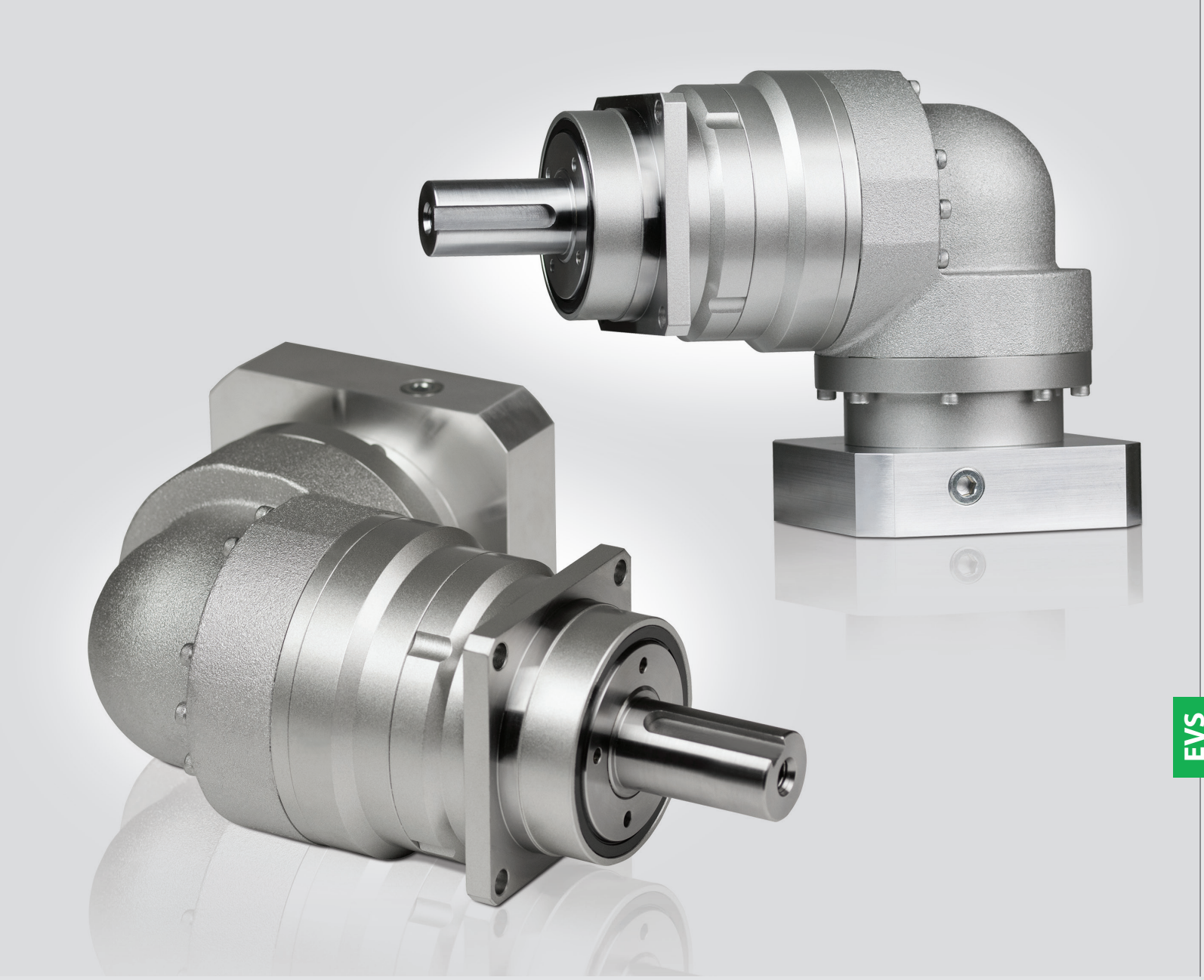

EVS SERIES

- Proven performer in high end motion control applications with demanding accuracy requirements
- Excellent fit for difficult overhung load situations with a limited space envelope
- The widest range of frame sizes and ratios available in the market
- Best-In-class standard backlash of ≤4 arc-min
- Broad range of mounting adapters offer a simple, precise attachment to any motor
- Maintenance-free solution that is lubricated for life. High performance grease allows flexible mounting in any orientation
- Industry standard through-bolt mounting style

EVS Series Features

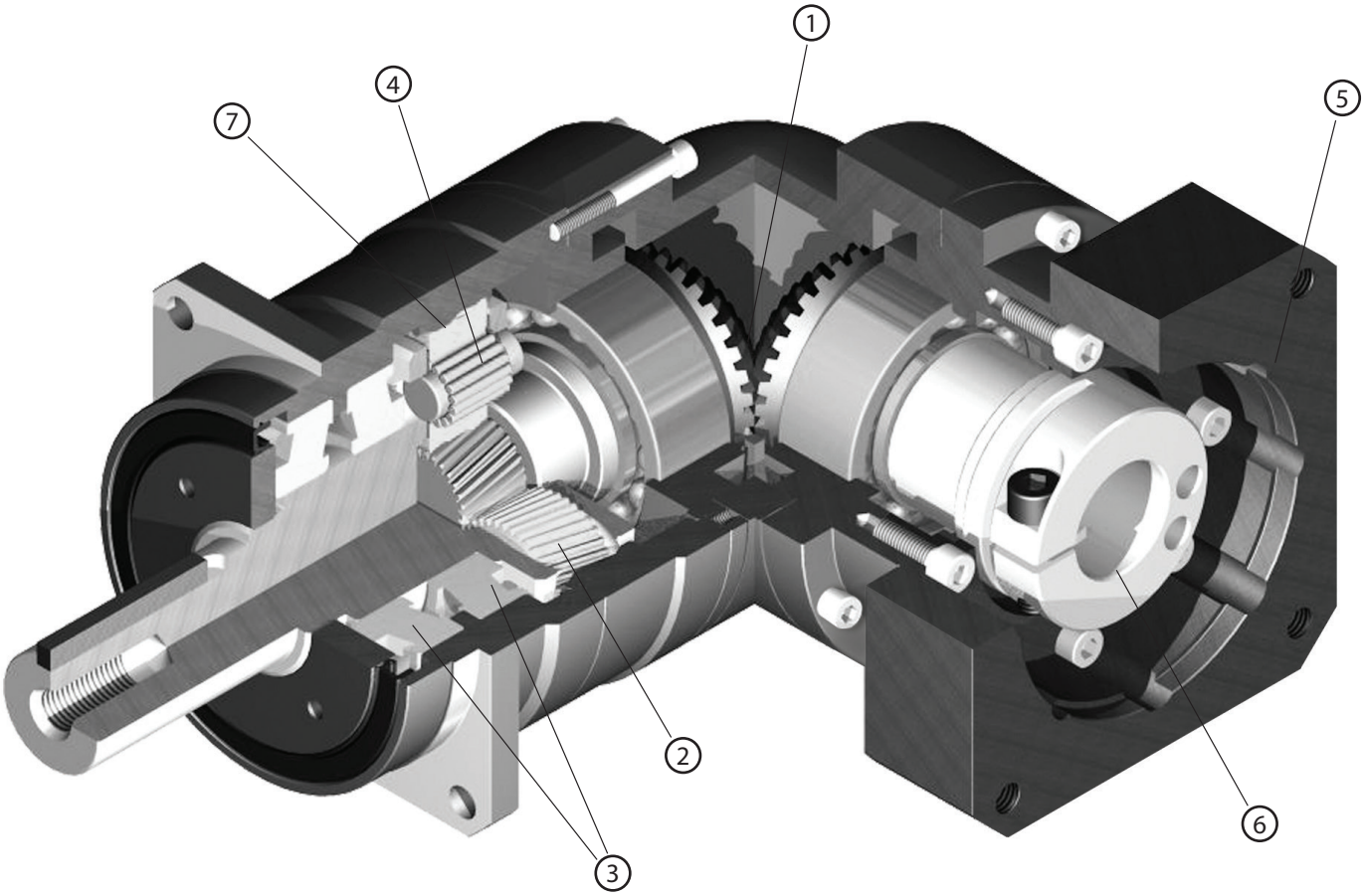

1. Right angle bevel gear configuration allows motor to be mounted at a 90 degree position from the gearbox, saving space
2. Carburized helical gears with proprietary secondary finishing process for higher accuracy and smooth, quiet operation
3. One piece output shaft and planet carrier with dual tapered roller bearings. Higher stiffness, torque capacity and safety factor, with guaranteed alignment of gearing
4. Uncaged needle roller bearings provide excellent torque density and torsional rigidity
5. Optimized mounting system with active centering on motor pilot diameter guarantees alignment of motor. Motor can be installed in any orientation
6. True concentric motor shaft clamping connection, optimized for your specific motor. Reduced inertia for dynamic performance and balanced for high speed operation
7. Ring gear machined directly into the housing, not welded or pressed in. Provides greater concentricity and elimination of speed fluctuation

EVS Series Model Code

EVS – 100 B – 7 – K 4 19HB16

- **19HB16** — Motor mounting code (*1)
- **4** — Backlash:
  - 060, 075, 100, 140: ≤4 - 7 arc-min
  - 180, 210, 240: ≤6 - 9 arc-min
- **K** — Output mounting style:
  - K: Keyed shaft
  - S: Smooth shaft
- **7** — Ratio:
  - 2-Stage：3, 4, 5, 6, 7, 8, 9, 10
  - 3-Stage：15, 16, 20, 25, 28, 30, 35, 40, 45, 50, 60, 70, 80, 90, 100
- **B** — Design version
- **100** — Frame size: 060, 075, 100, 140, 180, 210, 240
- **EVS** — Series

*1) Motor mounting code varies depending on the motor. Use the selection tool link below to configure the code.

Contact us for additional information or refer to our online gearbox selection tool.

Selection tool https://www.nidec-drivetechnology.co.jp/selection/all/

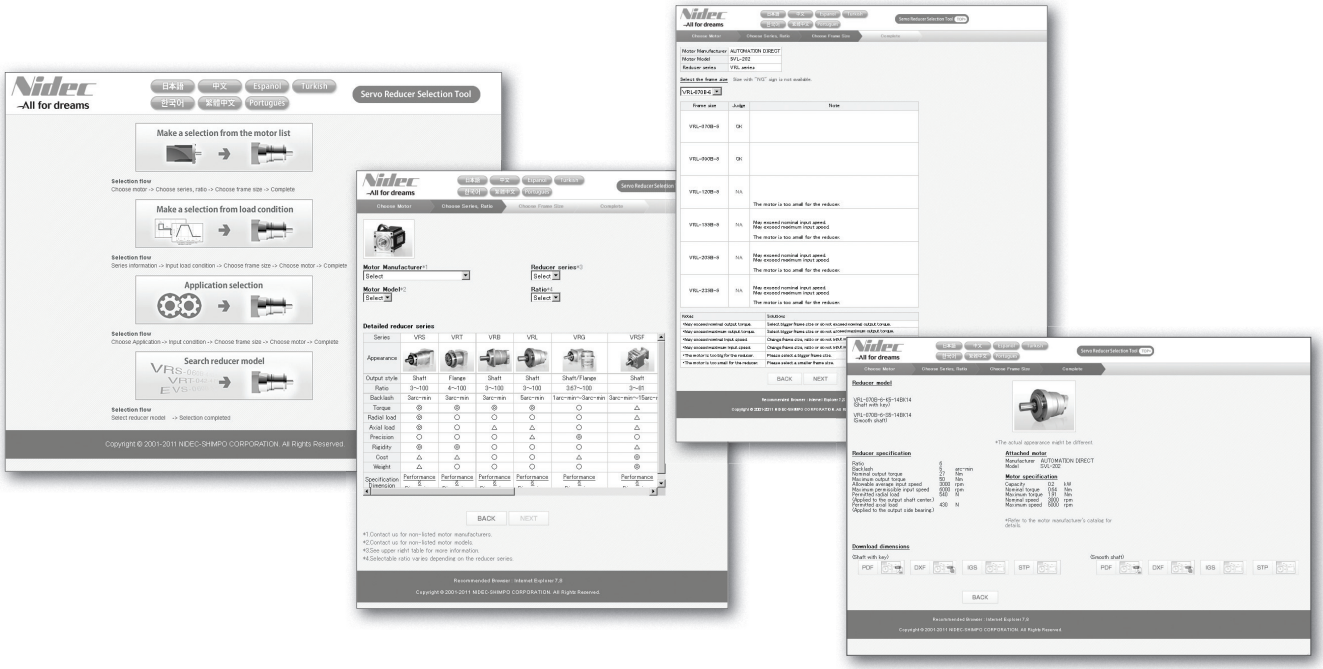

EVS

EVS 060 2-Stage Specifications

Frame Size	**060**									
Ratio	Unit	Note	3	4	5	6	7	8	9	10
Nominal Output Torque	[Nm]	*1	12	16	22	24	24	24	19	19
Maximum Acceleration Torque	[Nm]	*2	29	38	48	54	54	54	38	38
Maximum Torque	[Nm]	*3	33	45	56	63	63	61	45	45
Emergency Stop Torque	[Nm]	*4	50	65	80	90	90	90	65	65
Nominal Input Speed	[rpm]	*5	3300							
Maximum Input Speed	[rpm]	*6	6000							
No Load Running Torque	[Nm]	*7	0.33							
Maximum Radial Load	[N]	*8	3000							
Maximum Axial Load	[N]	*9	2700							
Moment of Inertia (≤ Ø 8)	[kgcm2]	--	0.320	0.271	0.251	0.242	0.235	0.232	0.229	0.228
Moment of Inertia (≤ Ø 14)	[kgcm2]	--	0.395	0.346	0.326	0.317	0.310	0.307	0.304	0.303
Moment of Inertia (≤ Ø 19)	[kgcm2]	--	0.584	0.535	0.516	0.506	0.500	0.496	0.494	0.492
Efficiency	[%]	*10	93							
Torsional Rigidity	[Nm/arc-min]	*11	3							
Maximum Torsional Backlash	[arc-min]	--	≤ 4							
Noise Level	dB [A]	*12	≤ 80							
Protection Class	--	*13	IP54 (IP65)							
Ambient Temperature	[°C]	--	0-40							
Permitted Housing Temperature	[°C]	--	90							
Weight	[kg]	*14	2.0							

EVS 060 3-Stage Specifications

Frame Size	**060**									
Ratio	Unit	Note	15	16	20	25	28	30	35	40
Nominal Output Torque	[Nm]	*1	18	26	26	28	28	19	28	28
Maximum Acceleration Torque	[Nm]	*2	38	54	54	54	54	38	54	54
Maximum Torque	[Nm]	*3	38	54	54	54	54	38	54	54
Emergency Stop Torque	[Nm]	*4	65	90	90	90	90	65	90	90
Nominal Input Speed	[rpm]	*5	3800							
Maximum Input Speed	[rpm]	*6	6000							
No Load Running Torque	[Nm]	*7	0.20							
Maximum Radial Load	[N]	*8	3000							
Maximum Axial Load	[N]	*9	2700							
Moment of Inertia (≤ Ø 8)	[kgcm2]	--	0.074	0.079	0.072	0.071	0.077	0.062	0.070	0.061
Moment of Inertia (≤ Ø 14)	[kgcm2]	--	0.118	0.124	0.116	0.115	0.122	0.106	0.115	0.106
Moment of Inertia (≤ Ø 19)	[kgcm2]	--	--	--	--	--	--	--	--	--
Efficiency	[%]	*10	88							
Torsional Rigidity	[Nm/arc-min]	*11	3							
Maximum Torsional Backlash	[arc-min]	--	≤ 7							
Noise Level	dB [A]	*12	≤ 80							
Protection Class	--	*13	IP54 (IP65)							
Ambient Temperature	[°C]	--	0-40							
Permitted Housing Temperature	[°C]	--	90							
Weight	[kg]	*14	1.8							

EVS 060 3-Stage Specifications

Frame Size	**060**								
Ratio	Unit	Note	45	50	60	70	80	90	100
Nominal Output Torque	[Nm]	*1	19	28	28	28	28	19	19
Maximum Acceleration Torque	[Nm]	*2	38	54	54	54	54	38	38
Maximum Torque	[Nm]	*3	38	54	54	54	54	38	38
Emergency Stop Torque	[Nm]	*4	65	90	90	90	90	65	65
Nominal Input Speed	[rpm]	*5	3800						
Maximum Input Speed	[rpm]	*6	6000						
No Load Running Torque	[Nm]	*7	0.2						
Maximum Radial Load	[N]	*8	3000						
Maximum Axial Load	[N]	*9	2700						
Moment of Inertia (≤ Ø 8)	[kgcm2]	--	0.070	0.061	0.061	0.061	0.061	0.061	0.061
Moment of Inertia (≤ Ø 14)	[kgcm2]	--	0.115	0.106	0.106	0.106	0.105	0.105	0.105
Moment of Inertia (≤ Ø 19)	[kgcm2]	--	--	--	--	--	--	--	--
Efficiency	[%]	*10	88						
Torsional Rigidity	[Nm/arc-min]	*11	3						
Maximum Torsional Backlash	[arc-min]	--	≤ 7						
Noise Level	dB [A]	*12	≤ 80						
Protection Class	--	*13	IP54 (IP65)						
Ambient Temperature	[°C]	--	0-40						
Permitted Housing Temperature	[°C]	--	90						
Weight	[kg]	*14	1.8						

*1) At nominal input speed, service life is 20,000 hours

*2) The maximum torque when starting or stopping operation. Apply Cycle Factor f_0, found on page 468, for higher duty cycle applications

*3) Permitted 10,000 times during service life. Based on 10% of maximum radial load and smooth output shaft

*4) The maximum torque allowed under a stress situation. Permitted 1,000 times during service life

*5) The average input speed at nominal input torque. Maintain housing temperature below permitted value

*6) The maximum intermittent input speed

*7) Torque at no load applied to the input shaft at nominal input speed

*8) The maximum radial load that the gearbox can accept

*9) The maximum axial load that the gearbox can accept

*10) The efficiency at the nominal output torque rating

*11) This does not include lost motion

*12) Contact Nidec Drive Technology for the testing conditions and environment

*13) Various wash-down options are available. Contact Nidec Drive Technology for more details

*14) Weight may vary slightly between models

EVS 060 2-Stage Dimensions

Input bore size ≦φ8 mm

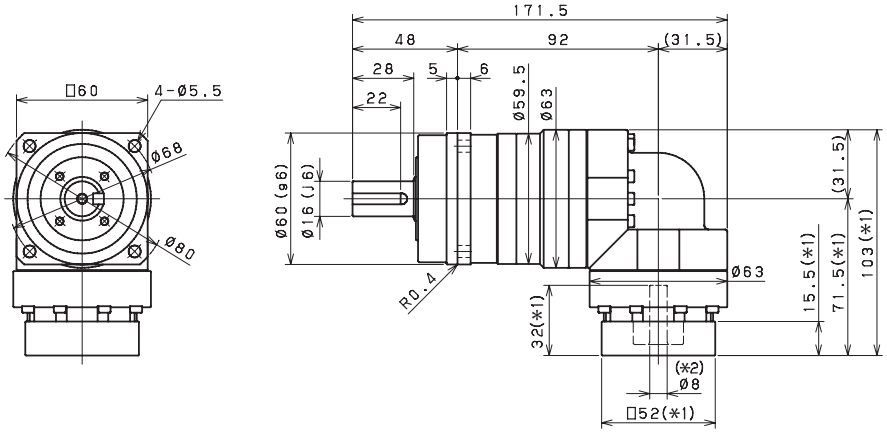

Input bore size ≦φ14 mm

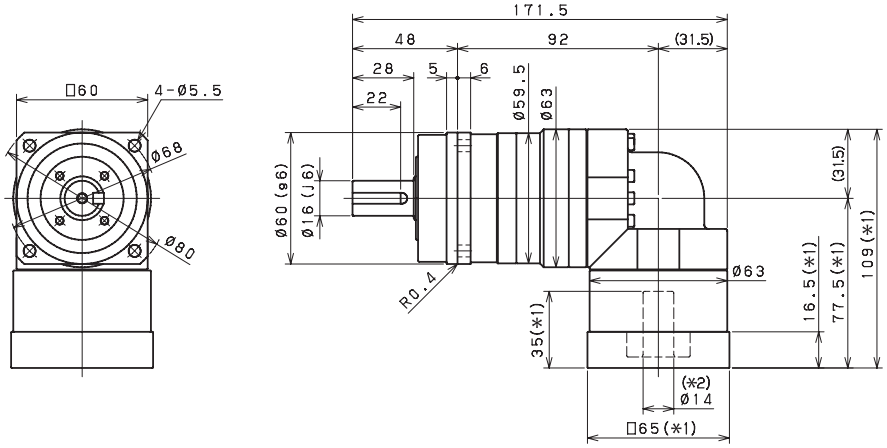

Input bore size ≦φ19 mm

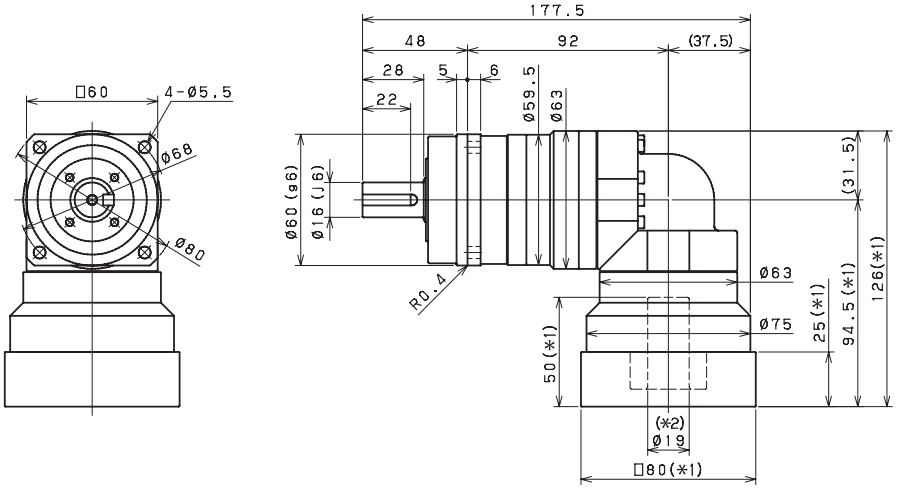

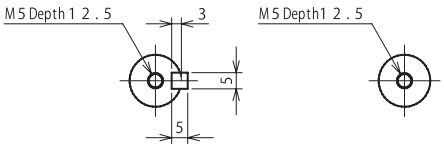

Keyed shaft　　Smooth shaft

*1) Length will vary depending on motor

*2) Bushing will be inserted to adapt to motor shaft

EVS 060 3-Stage Dimensions

Input bore size ≦φ8 mm

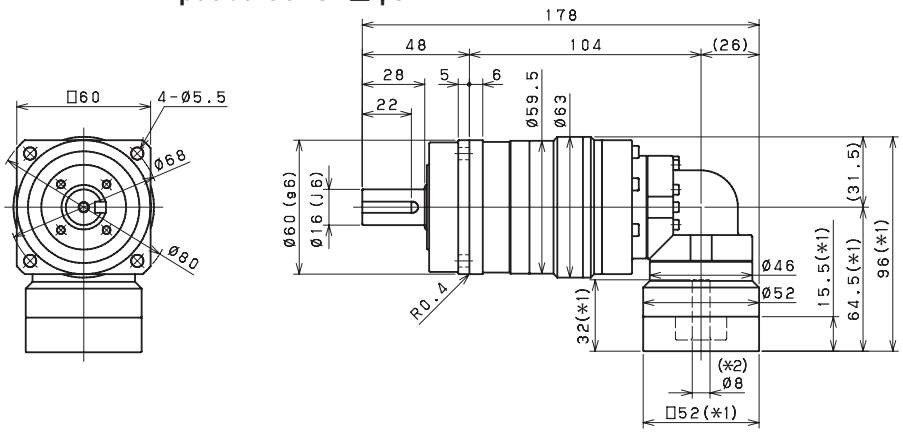

Input bore size ≦φ14 mm

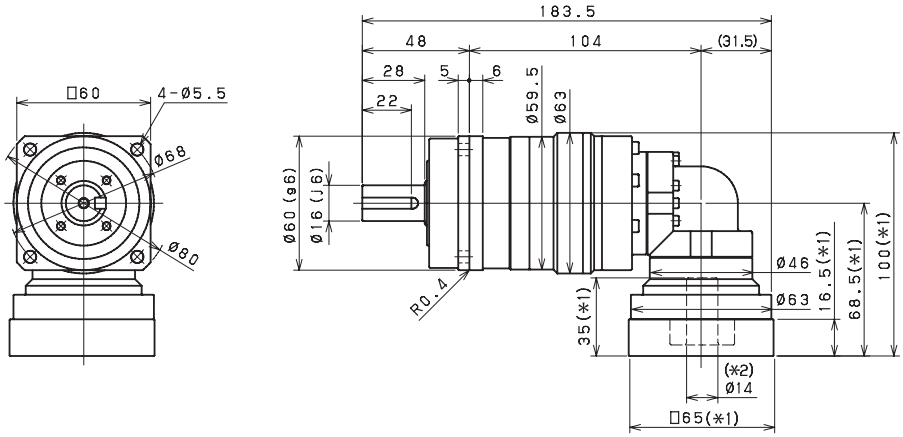

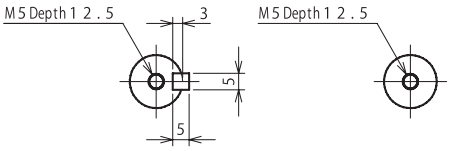

Keyed shaft　　Smooth shaft

*1) Length will vary depending on motor

*2) Bushing will be inserted to adapt to motor shaft

EVS

EVS 075 2-Stage Specifications

Frame Size			**075**							
Ratio	Unit	Note	3	4	5	6	7	8	9	10
Nominal Output Torque	[Nm]	*1	46	61	67	67	67	74	51	51
Maximum Acceleration Torque	[Nm]	*2	77	105	105	105	105	105	78	78
Maximum Torque	[Nm]	*3	90	121	121	119	119	117	93	93
Emergency Stop Torque	[Nm]	*4	130	170	220	220	220	220	170	170
Nominal Input Speed	[rpm]	*5	3000							
Maximum Input Speed	[rpm]	*6	6000							
No Load Running Torque	[Nm]	*7	1.13							
Maximum Radial Load	[N]	*8	4300							
Maximum Axial Load	[N]	*9	3900							
Moment of Inertia (≤ Ø 8)	[kgcm2]	--	--	--	--	--	--	--	--	--
Moment of Inertia (≤ Ø 14)	[kgcm2]	--	2.07	1.87	1.78	1.74	1.72	1.7	1.69	1.69
Moment of Inertia (≤ Ø 19)	[kgcm2]	--	2.40	2.20	2.11	2.07	2.05	2.03	2.02	2.02
Moment of Inertia (≤ Ø 28)	[kgcm2]	--	4.53	4.32	4.24	4.2	4.17	4.16	4.15	4.15
Efficiency	[%]	*10	93							
Torsional Rigidity	[Nm/arc-min]	*11	10							
Maximum Torsional Backlash	[arc-min]	--	≤ 4							
Noise Level	dB [A]	*12	≤ 80							
Protection Class	--	*13	IP54 (IP65)							
Ambient Temperature	[°C]	--	0-40							
Permitted Housing Temperature	[°C]	--	90							
Weight	[kg]	*14	4.8							

EVS 075 3-Stage Specifications

Frame Size			**075**							
Ratio	Unit	Note	15	16	20	25	28	30	35	40
Nominal Output Torque	[Nm]	*1	43	66	68	72	78	47	73	78
Maximum Acceleration Torque	[Nm]	*2	77	128	128	128	128	77	128	128
Maximum Torque	[Nm]	*3	77	128	128	128	128	77	128	128
Emergency Stop Torque	[Nm]	*4	170	220	220	220	220	170	220	220
Nominal Input Speed	[rpm]	*5	3300							
Maximum Input Speed	[rpm]	*6	6000							
No Load Running Torque	[Nm]	*7	0.55							
Maximum Radial Load	[N]	*8	4300							
Maximum Axial Load	[N]	*9	3900							
Moment of Inertia (≤ Ø 8)	[kgcm2]	--	0.33	0.38	0.33	0.32	0.37	0.25	0.32	0.25
Moment of Inertia (≤ Ø 14)	[kgcm2]	--	0.41	0.46	0.40	0.40	0.45	0.32	0.40	0.32
Moment of Inertia (≤ Ø 19)	[kgcm2]	--	0.60	0.65	0.59	0.59	0.64	0.51	0.58	0.51
Moment of Inertia (≤ Ø 28)	[kgcm2]	--	--	--	--	--	--	--	--	--
Efficiency	[%]	*10	88							
Torsional Rigidity	[Nm/arc-min]	*11	10							
Maximum Torsional Backlash	[arc-min]	--	≤ 7							
Noise Level	dB [A]	*12	≤ 80							
Protection Class	--	*13	IP54 (IP65)							
Ambient Temperature	[°C]	--	0-40							
Permitted Housing Temperature	[°C]	--	90							
Weight	[kg]	*14	4.1							

EVS 075 3-Stage Specifications

Frame Size	**075**								
Ratio	Unit	Note	45	50	60	70	80	90	100
Nominal Output Torque	[Nm]	*1	47	73	73	73	78	52	52
Maximum Acceleration Torque	[Nm]	*2	78	128	128	128	128	78	78
Maximum Torque	[Nm]	*3	78	128	128	128	128	78	78
Emergency Stop Torque	[Nm]	*4	170	220	220	220	220	170	170
Nominal Input Speed	[rpm]	*5	3300						
Maximum Input Speed	[rpm]	*6	6000						
No Load Running Torque	[Nm]	*7	0.55						
Maximum Radial Load	[N]	*8	4300						
Maximum Axial Load	[N]	*9	3900						
Moment of Inertia (≤ Ø 8)	[kgcm2]	--	0.32	0.25	0.25	0.25	0.25	0.25	0.25
Moment of Inertia (≤ Ø 14)	[kgcm2]	--	0.39	0.32	0.32	0.32	0.32	0.32	0.32
Moment of Inertia (≤ Ø 19)	[kgcm2]	--	0.58	0.51	0.51	0.51	0.51	0.51	0.51
Moment of Inertia (≤ Ø 28)	[kgcm2]	--	--	--	--	--	--	--	--
Efficiency	[%]	*10	88						
Torsional Rigidity	[Nm/arc-min]	*11	10						
Maximum Torsional Backlash	[arc-min]	--	≤ 7						
Noise Level	dB [A]	*12	≤ 80						
Protection Class	--	*13	IP54 (IP65)						
Ambient Temperature	[°C]	--	0-40						
Permitted Housing Temperature	[°C]	--	90						
Weight	[kg]	*14	4.1						

*1) At nominal input speed, service life is 20,000 hours

*2) The maximum torque when starting or stopping operation. Apply Cycle Factor $\mathbf{f_0}$, found on page 468, for higher duty cycle applications

*3) Permitted 10,000 times during service life. Based on 10% of maximum radial load and smooth output shaft

*4) The maximum torque allowed under a stress situation. Permitted 1,000 times during service life

*5) The average input speed at nominal input torque. Maintain housing temperature below permitted value

*6) The maximum intermittent input speed

*7) Torque at no load applied to the input shaft at nominal input speed

*8) The maximum radial load that the gearbox can accept

*9) The maximum axial load that the gearbox can accept

*10) The efficiency at the nominal output torque rating

*11) This does not include lost motion

*12) Contact Nidec Drive Technology for the testing conditions and environment

*13) Various wash-down options are available. Contact Nidec Drive Technology for more details

*14) Weight may vary slightly between models

EVS 075 2-Stage Dimensions

Input bore size ≦φ14 mm

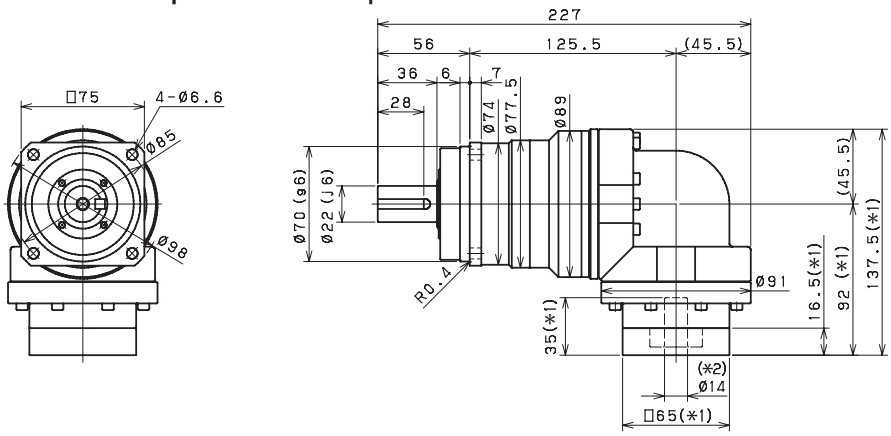

Input bore size ≦φ19 mm

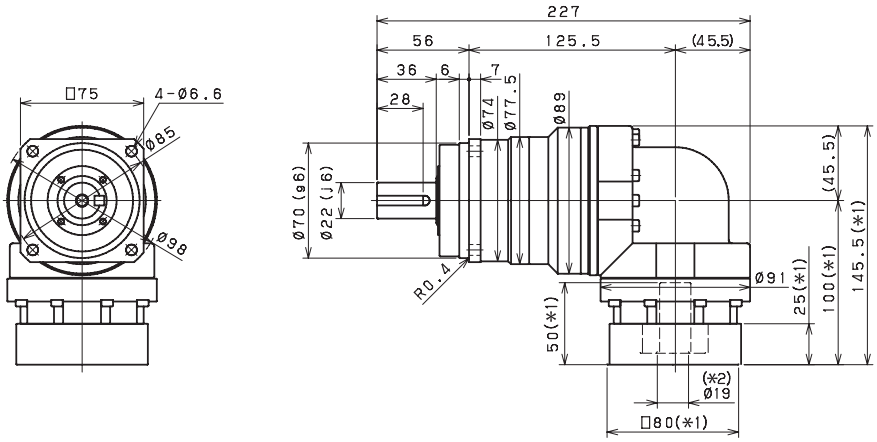

Input bore size ≦φ28 mm

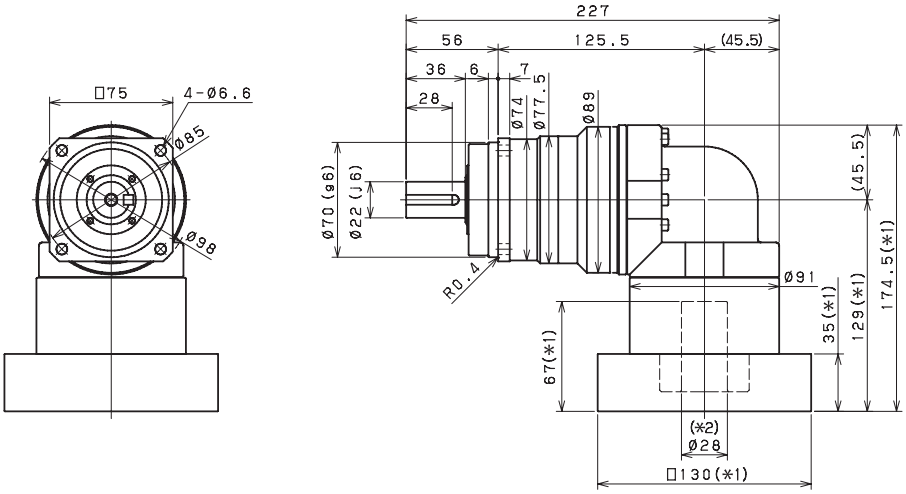

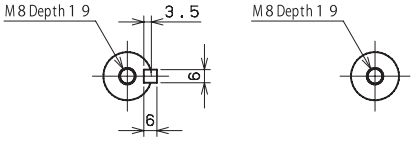

Keyed shaft　　Smooth shaft

*1) Length will vary depending on motor

*2) Bushing will be inserted to adapt to motor shaft

EVS 075 3-Stage Dimensions

Input bore size ≦φ8 mm

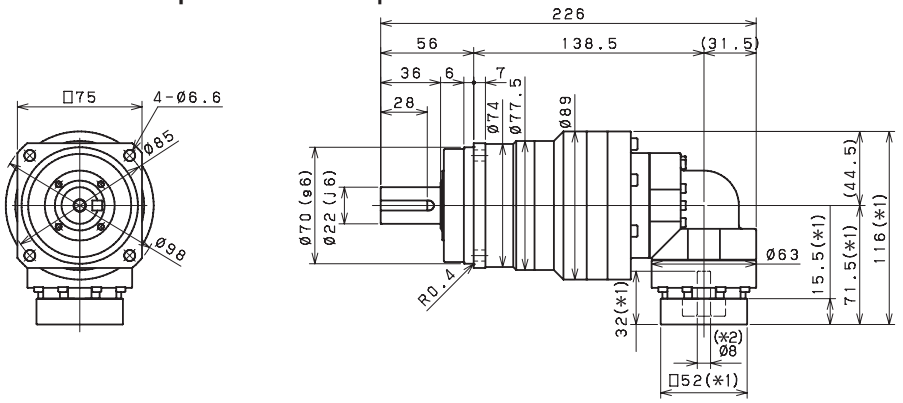

Input bore size ≦φ14 mm

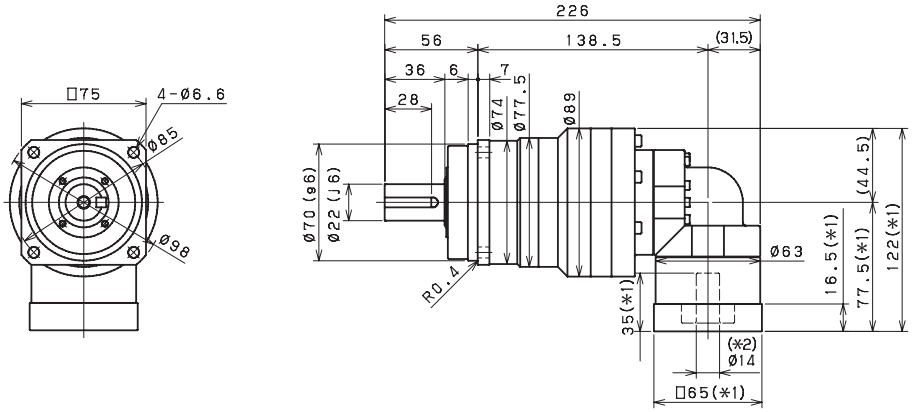

Input bore size ≦φ19 mm

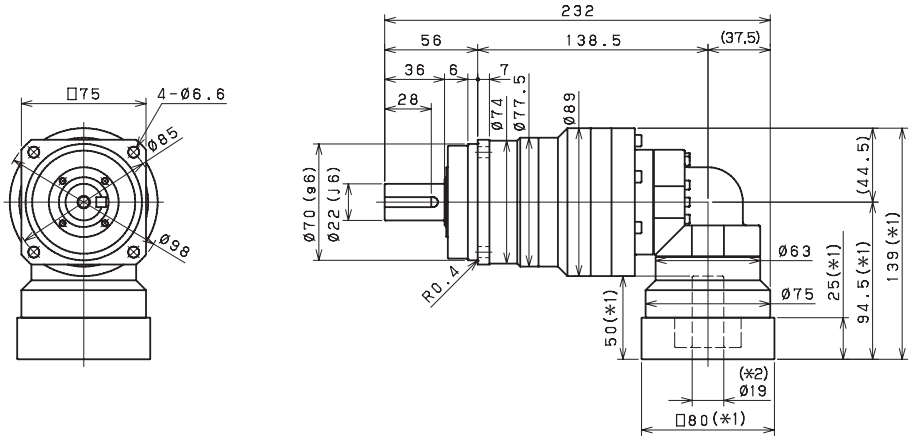

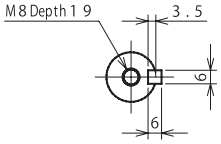

Keyed shaft

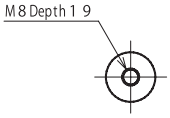

Smooth shaft

*1) Length will vary depending on motor

*2) Bushing will be inserted to adapt to motor shaft

EVS

EVS 100 2-Stage Specifications

Frame Size			**100**							
Ratio	Unit	Note	3	4	5	6	7	8	9	10
Nominal Output Torque	[Nm]	*1	77	108	123	154	154	154	128	128
Maximum Acceleration Torque	[Nm]	*2	172	227	272	340	340	340	240	240
Maximum Torque	[Nm]	*3	205	271	325	401	401	401	288	288
Emergency Stop Torque	[Nm]	*4	320	430	500	550	550	550	450	450
Nominal Input Speed	[rpm]	*5	3000							
Maximum Input Speed	[rpm]	*6	6000							
No Load Running Torque	[Nm]	*7	1.88							
Maximum Radial Load	[N]	*8	7000							
Maximum Axial Load	[N]	*9	6300							
Moment of Inertia (≤ Ø 14)	[kgcm2]	--	--	--	--	--	--	--	--	--
Moment of Inertia (≤ Ø 19)	[kgcm2]	--	6.61	5.41	4.97	4.73	4.62	4.53	4.47	4.45
Moment of Inertia (≤ Ø 28)	[kgcm2]	--	8.21	7.01	6.57	6.33	6.22	6.12	6.07	6.04
Moment of Inertia (≤ Ø 38)	[kgcm2]	--	15.28	14.08	13.64	13.40	13.29	13.20	13.14	13.11
Efficiency	[%]	*10	93							
Torsional Rigidity	[Nm/arc-min]	*11	31							
Maximum Torsional Backlash	[arc-min]	--	≤ 4							
Noise Level	dB [A]	*12	≤ 85							
Protection Class	--	*13	IP54 (IP65)							
Ambient Temperature	[°C]	--	0-40							
Permitted Housing Temperature	[°C]	--	90							
Weight	[kg]	*14	10.5							

EVS 100 3-Stage Specifications

Frame Size			**100**							
Ratio	Unit	Note	15	16	20	25	28	30	35	40
Nominal Output Torque	[Nm]	*1	125	136	162	174	174	132	174	172
Maximum Acceleration Torque	[Nm]	*2	229	295	340	340	340	229	340	340
Maximum Torque	[Nm]	*3	229	295	340	340	340	229	340	340
Emergency Stop Torque	[Nm]	*4	450	550	550	550	550	450	550	550
Nominal Input Speed	[rpm]	*5	3100							
Maximum Input Speed	[rpm]	*6	6000							
No Load Running Torque	[Nm]	*7	1.11							
Maximum Radial Load	[N]	*8	7000							
Maximum Axial Load	[N]	*9	6300							
Moment of Inertia (≤ Ø 14)	[kgcm2]	--	2.24	2.45	2.19	2.18	2.40	1.87	2.16	1.86
Moment of Inertia (≤ Ø 19)	[kgcm2]	--	2.57	2.78	2.52	2.51	2.73	2.20	2.49	2.19
Moment of Inertia (≤ Ø 28)	[kgcm2]	--	4.70	4.91	4.65	4.63	4.86	4.33	4.62	4.32
Moment of Inertia (≤ Ø 38)	[kgcm2]	--	--	--	--	--	--	--	--	--
Efficiency	[%]	*10	88							
Torsional Rigidity	[Nm/arc-min]	*11	31							
Maximum Torsional Backlash	[arc-min]	--	≤ 7							
Noise Level	dB [A]	*12	≤ 85							
Protection Class	--	*13	IP54 (IP65)							
Ambient Temperature	[°C]	--	0-40							
Permitted Housing Temperature	[°C]	--	90							
Weight	[kg]	*14	10.1							

EVS 100 3-Stage Specifications

Frame Size	**100**								
Ratio	Unit	Note	45	50	60	70	80	90	100
Nominal Output Torque	[Nm]	*1	132	174	174	174	174	132	132
Maximum Acceleration Torque	[Nm]	*2	240	340	340	340	340	240	240
Maximum Torque	[Nm]	*3	240	340	340	340	340	240	240
Emergency Stop Torque	[Nm]	*4	450	550	550	550	550	450	450
Nominal Input Speed	[rpm]	*5	3100						
Maximum Input Speed	[rpm]	*6	6000						
No Load Running Torque	[Nm]	*7	1.11						
Maximum Radial Load	[N]	*8	7000						
Maximum Axial Load	[N]	*9	6300						
Moment of Inertia (≤ Ø 14)	[kgcm2]	--	2.15	1.86	1.85	1.85	1.85	1.85	1.85
Moment of Inertia (≤ Ø 19)	[kgcm2]	--	2.48	2.19	2.18	2.18	2.18	2.18	2.18
Moment of Inertia (≤ Ø 28)	[kgcm2]	--	4.61	4.31	4.31	4.31	4.31	4.31	4.31
Moment of Inertia (≤ Ø 38)	[kgcm2]	--	--	--	--	--	--	--	--
Efficiency	[%]	*10	88						
Torsional Rigidity	[Nm/arc-min]	*11	31						
Maximum Torsional Backlash	[arc-min]	--	≤ 7						
Noise Level	dB [A]	*12	≤ 85						
Protection Class	--	*13	IP54 (IP65)						
Ambient Temperature	[°C]	--	0-40						
Permitted Housing Temperature	[°C]	--	90						
Weight	[kg]	*14	10.1						

*1) At nominal input speed, service life is 20,000 hours

*2) The maximum torque when starting or stopping operation. Apply Cycle Factor f_0, found on page 468, for higher duty cycle applications

*3) Permitted 10,000 times during service life. Based on 10% of maximum radial load and smooth output shaft

*4) The maximum torque allowed under a stress situation. Permitted 1,000 times during service life

*5) The average input speed at nominal input torque. Maintain housing temperature below permitted value

*6) The maximum intermittent input speed

*7) Torque at no load applied to the input shaft at nominal input speed

*8) The maximum radial load that the gearbox can accept

*9) The maximum axial load that the gearbox can accept

*10) The efficiency at the nominal output torque rating

*11) This does not include lost motion

*12) Contact Nidec Drive Technology for the testing conditions and environment

*13) Various wash-down options are available. Contact Nidec Drive Technology for more details

*14) Weight may vary slightly between models

EVS 100 2-Stage Dimensions

Input bore size ≦φ19 mm

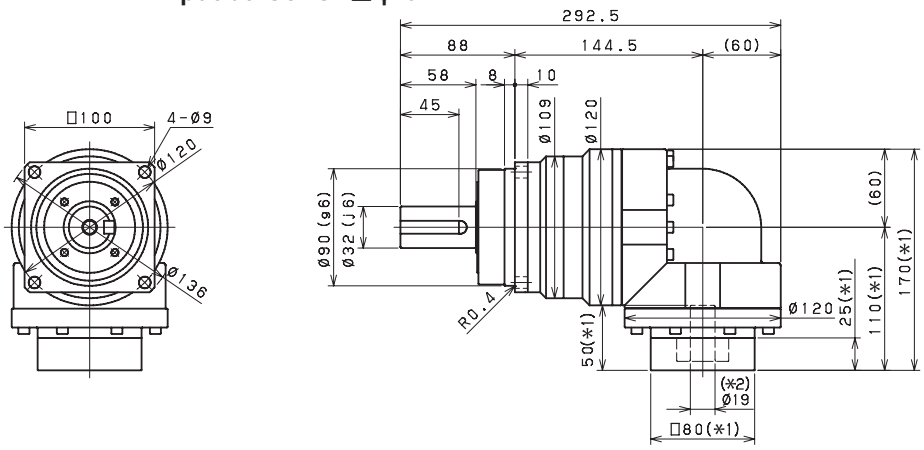

Input bore size ≦φ28 mm

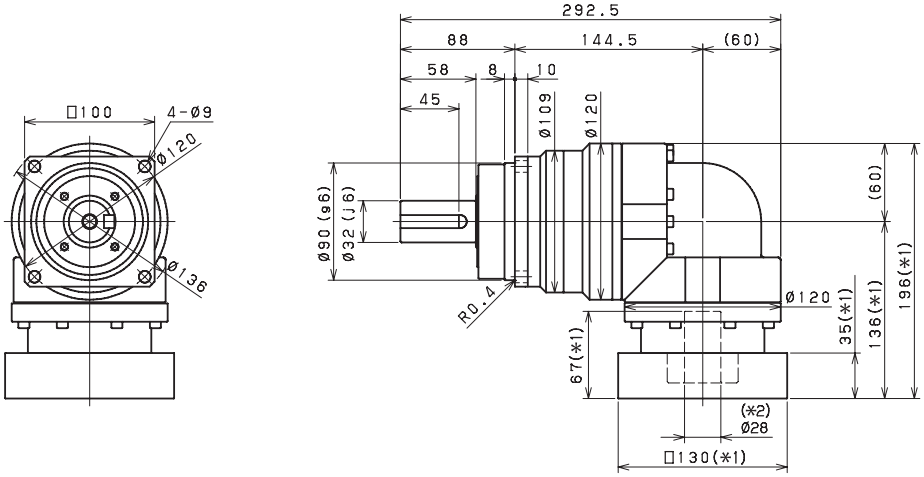

Input bore size ≦φ38 mm

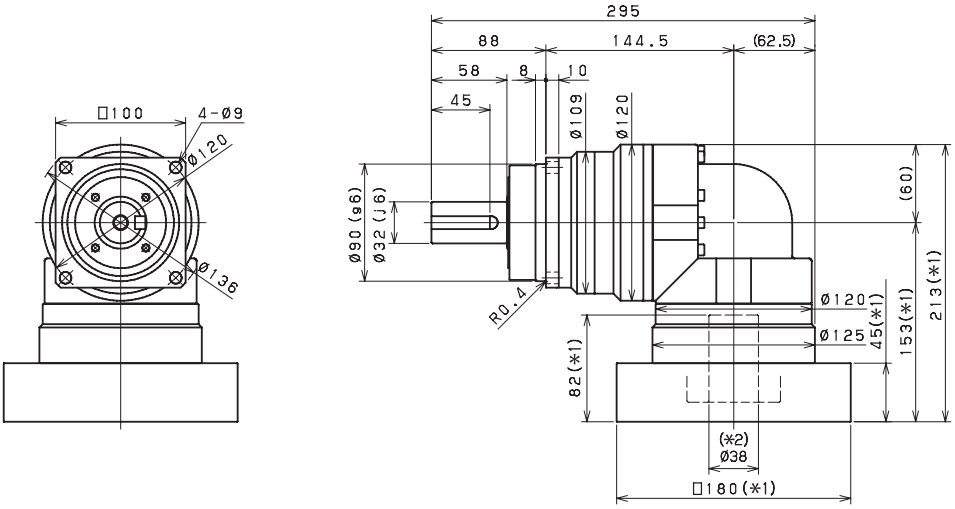

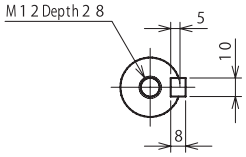

Keyed shaft

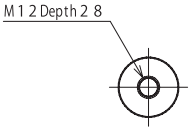

Smooth shaft

*1) Length will vary depending on motor

*2) Bushing will be inserted to adapt to motor shaft

EVS 100 3-Stage Dimensions

Input bore size ≦φ14 mm

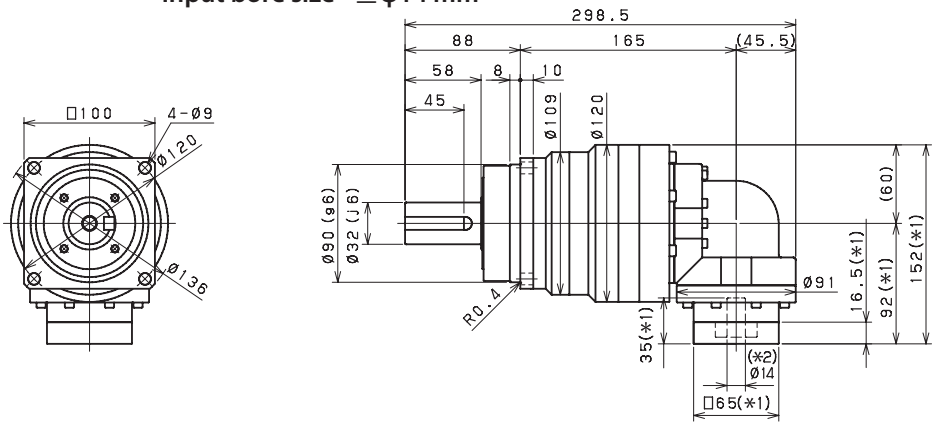

Input bore size ≦φ19 mm

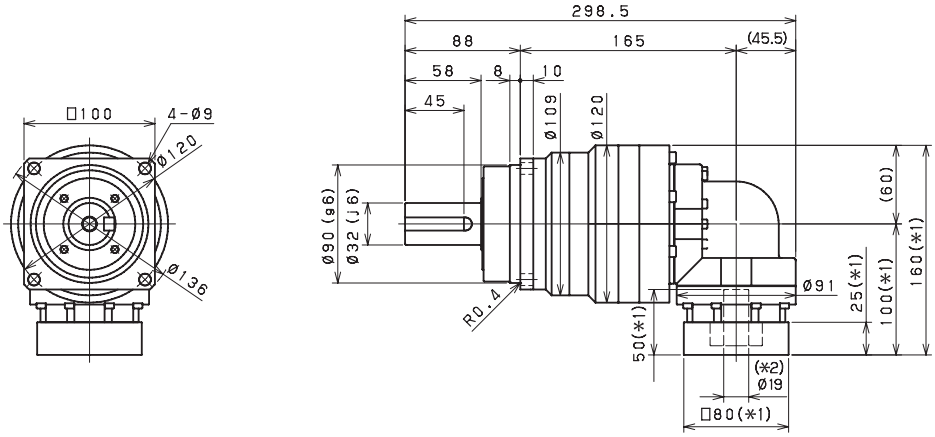

Input bore size ≦φ28 mm

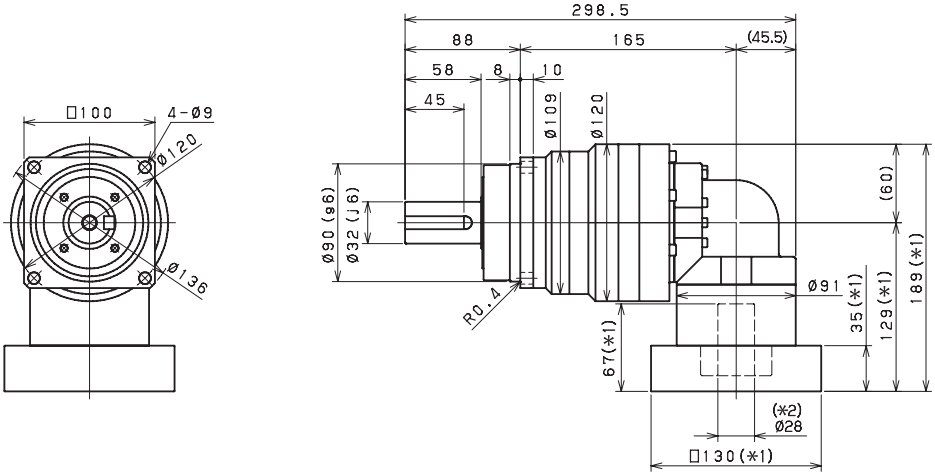

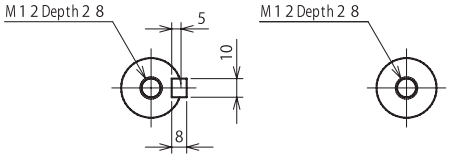

Keyed shaft　　Smooth shaft

*1) Length will vary depending on motor

*2) Bushing will be inserted to adapt to motor shaft

EVS

EVS 140 2-Stage Specifications

Frame Size			**140**							
Ratio	Unit	Note	3	4	5	6	7	8	9	10
Nominal Output Torque	[Nm]	*1	132	181	205	266	307	307	233	233
Maximum Acceleration Torque	[Nm]	*2	296	389	458	595	687	687	480	480
Maximum Torque	[Nm]	*3	329	452	531	664	766	766	559	559
Emergency Stop Torque	[Nm]	*4	700	950	1100	1100	1100	1100	750	750
Nominal Input Speed	[rpm]	*5	2000							
Maximum Input Speed	[rpm]	*6	5000							
No Load Running Torque	[Nm]	*7	3.26							
Maximum Radial Load	[N]	*8	10000							
Maximum Axial Load	[N]	*9	9000							
Moment of Inertia (≤ Ø 19)	[kgcm2]	--	--	--	--	--	--	--	--	--
Moment of Inertia (≤ Ø 28)	[kgcm2]	--	23.01	18.49	16.85	15.97	15.55	15.21	14.75	14.64
Moment of Inertia (≤ Ø 38)	[kgcm2]	--	27.38	22.86	21.22	20.34	19.92	19.58	19.12	19.02
Moment of Inertia (≤ Ø 48)	[kgcm2]	--	40.61	36.09	34.45	33.57	33.15	32.81	32.25	32.25
Efficiency	[%]	*10	93							
Torsional Rigidity	[Nm/arc-min]	*11	60							
Maximum Torsional Backlash	[arc-min]	--	≤ 4							
Noise Level	dB [A]	*12	≤ 85							
Protection Class	--	*13	IP54 (IP65)							
Ambient Temperature	[°C]	--	0-40							
Permitted Housing Temperature	[°C]	--	90							
Weight	[kg]	*14	20.6							

EVS 140 3-Stage Specifications

Frame Size			**140**							
Ratio	Unit	Note	15	16	20	25	28	30	35	40
Nominal Output Torque	[Nm]	*1	230	307	316	352	352	240	352	337
Maximum Acceleration Torque	[Nm]	*2	456	687	687	687	687	456	687	687
Maximum Torque	[Nm]	*3	456	687	687	687	687	456	687	687
Emergency Stop Torque	[Nm]	*4	750	1100	1100	1100	1100	750	1100	1100
Nominal Input Speed	[rpm]	*5	2300							
Maximum Input Speed	[rpm]	*6	5000							
No Load Running Torque	[Nm]	*7	2.56							
Maximum Radial Load	[N]	*8	10000							
Maximum Axial Load	[N]	*9	9000							
Moment of Inertia (≤ Ø 19)	[kgcm2]	--	6.40	7.29	6.22	6.15	7.09	4.99	6.09	4.94
Moment of Inertia (≤ Ø 28)	[kgcm2]	--	7.99	8.88	7.81	7.75	8.68	6.58	7.68	6.54
Moment of Inertia (≤ Ø 38)	[kgcm2]	--	15.06	15.95	14.88	14.82	15.75	13.66	14.76	13.61
Moment of Inertia (≤ Ø 48)	[kgcm2]	--	--	--	--	--	--	--	--	--
Efficiency	[%]	*10	88							
Torsional Rigidity	[Nm/arc-min]	*11	60							
Maximum Torsional Backlash	[arc-min]	--	≤ 7							
Noise Level	dB [A]	*12	≤ 85							
Protection Class	--	*13	IP54 (IP65)							
Ambient Temperature	[°C]	--	0-40							
Permitted Housing Temperature	[°C]	--	90							
Weight	[kg]	*14	20.7							

EVS 140 3-Stage Specifications

Frame Size	**140**								
Ratio	Unit	Note	45	50	60	70	80	90	100
Nominal Output Torque	[Nm]	*1	240	352	352	352	352	240	240
Maximum Acceleration Torque	[Nm]	*2	480	687	687	687	687	480	480
Maximum Torque	[Nm]	*3	480	687	687	687	687	480	480
Emergency Stop Torque	[Nm]	*4	750	1100	1100	1100	1100	750	750
Nominal Input Speed	[rpm]	*5	2300						
Maximum Input Speed	[rpm]	*6	5000						
No Load Running Torque	[Nm]	*7	2.56						
Maximum Radial Load	[N]	*8	10000						
Maximum Axial Load	[N]	*9	9000						
Moment of Inertia (≤ Ø 19)	[kgcm2]	--	6.07	4.93	4.92	4.91	4.91	4.91	4.91
Moment of Inertia (≤ Ø 28)	[kgcm2]	--	7.66	6.52	6.51	6.51	6.50	6.50	6.50
Moment of Inertia (≤ Ø 38)	[kgcm2]	--	14.73	13.59	13.59	13.58	13.58	13.57	13.57
Moment of Inertia (≤ Ø 48)	[kgcm2]	--	--	--	--	--	--	--	--
Efficiency	[%]	*10	88						
Torsional Rigidity	[Nm/arc-min]	*11	60						
Maximum Torsional Backlash	[arc-min]	--	≤ 7						
Noise Level	dB [A]	*12	≤ 85						
Protection Class	--	*13	IP54 (IP65)						
Ambient Temperature	[°C]	--	0-40						
Permitted Housing Temperature	[°C]	--	90						
Weight	[kg]	*14	20.7						

*1) At nominal input speed, service life is 20,000 hours

*2) The maximum torque when starting or stopping operation. Apply Cycle Factor f_0, found on page 468, for higher duty cycle applications

*3) Permitted 10,000 times during service life. Based on 10% of maximum radial load and smooth output shaft

*4) The maximum torque allowed under a stress situation. Permitted 1,000 times during service life

*5) The average input speed at nominal input torque. Maintain housing temperature below permitted value

*6) The maximum intermittent input speed

*7) Torque at no load applied to the input shaft at nominal input speed

*8) The maximum radial load that the gearbox can accept

*9) The maximum axial load that the gearbox can accept

*10) The efficiency at the nominal output torque rating

*11) This does not include lost motion

*12) Contact Nidec Drive Technology for the testing conditions and environment

*13) Various wash-down options are available. Contact Nidec Drive Technology for more details

*14) Weight may vary slightly between models

EVS 140 2-Stage Dimensions

Input bore size ≦φ28 mm

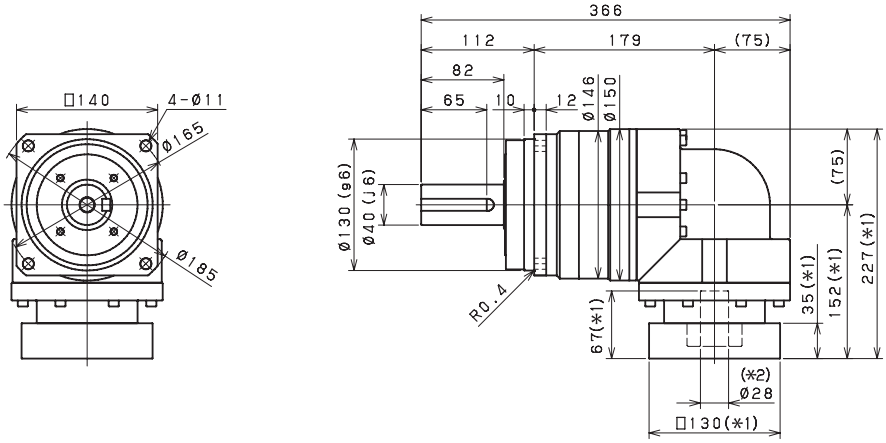

Input bore size ≦φ38 mm

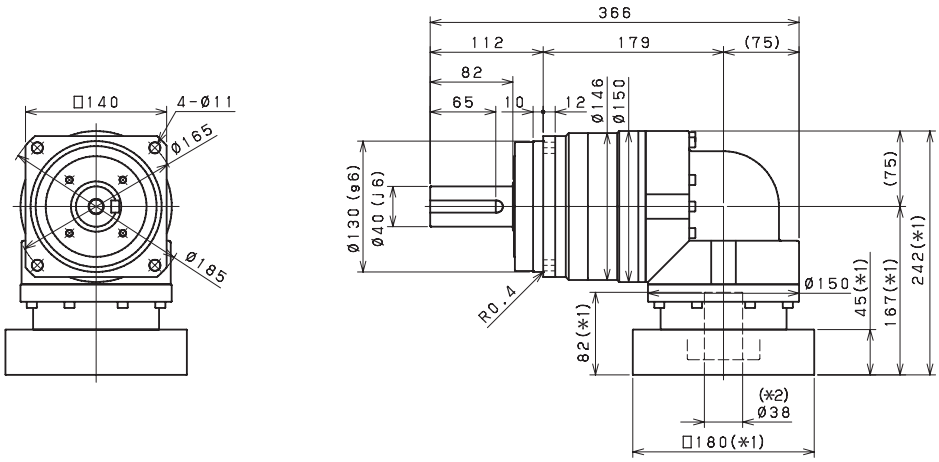

Input bore size ≦φ48 mm

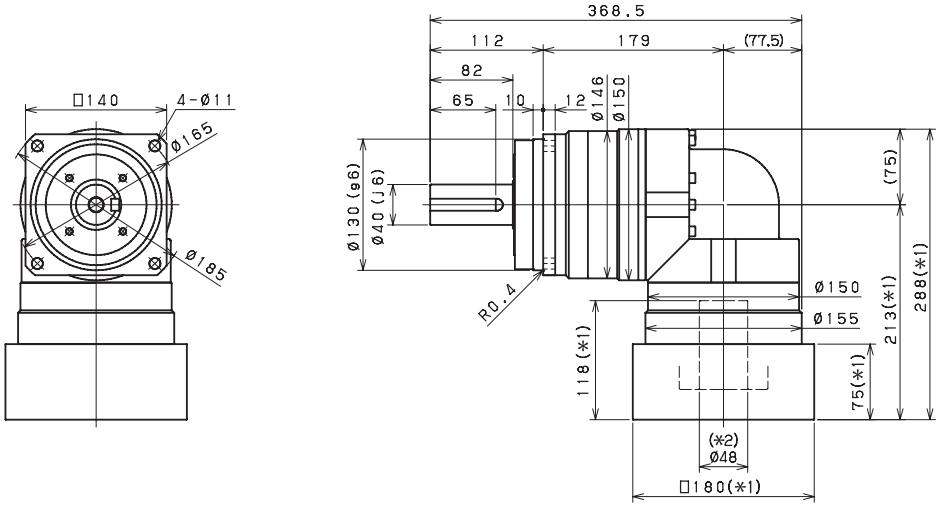

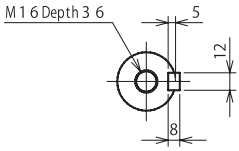

Keyed shaft

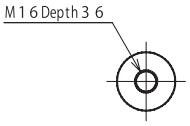

Smooth shaft

*1) Length will vary depending on motor

*2) Bushing will be inserted to adapt to motor shaft

EVS 140 3-Stage Dimensions

Input bore size ≦φ19 mm

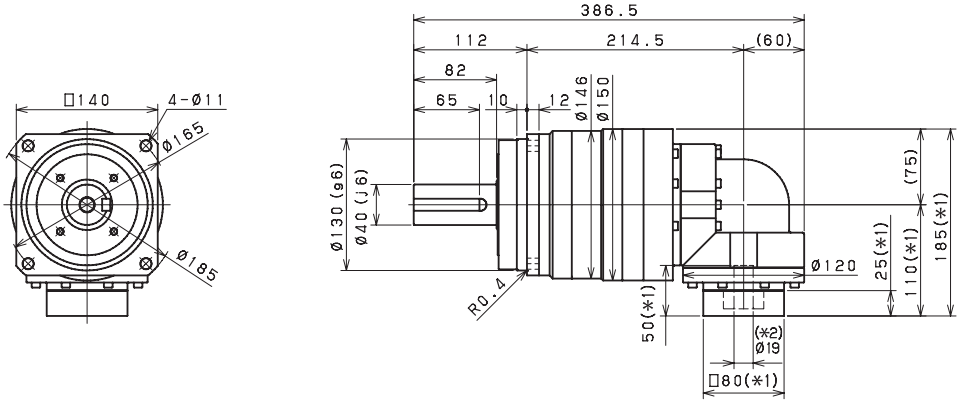

Input bore size ≦φ28 mm

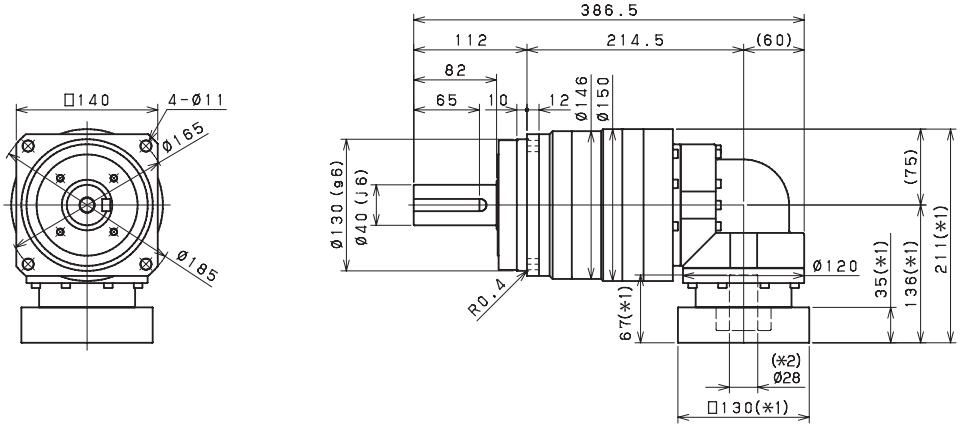

Input bore size ≦φ38 mm

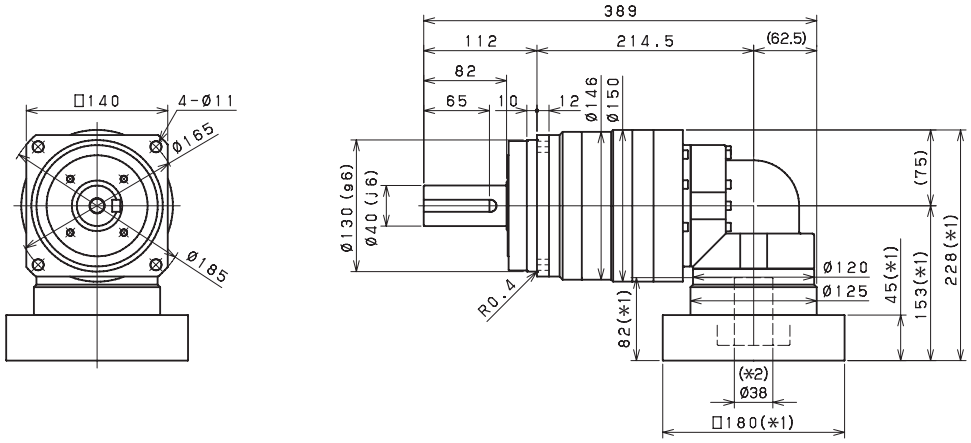

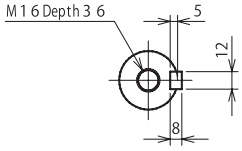

Keyed shaft

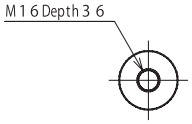

Smooth shaft

*1) Length will vary depending on motor

*2) Bushing will be inserted to adapt to motor shaft

EVS

EVS 180 2-Stage Specifications

Frame Size			**180**							
Ratio	Units	Note	3	4	5	6	7	8	9	10
Nominal Output Torque	[Nm]	*1	421	604	646	646	646	646	478	478
Maximum Acceleration Torque	[Nm]	*2	679	904	1127	1315	1315	1315	931	931
Maximum Torque	[Nm]	*3	750	1064	1327	1498	1498	1498	1144	1144
Emergency Stop Torque	[Nm]	*4	1300	1700	2000	2500	2500	2500	2000	2000
Nominal Input Speed	[rpm]	*5	1500							
Maximum Input Speed	[rpm]	*6	4000							
No Load Running Torque	[Nm]	*7	10.8							
Maximum Radial Load	[N]	*8	19000							
Maximum Axial Load	[N]	*9	17000							
Moment of Inertia (≤ Ø 28)	[kgcm2]	--	--	--	--	--	--	--	--	--
Moment of Inertia (≤Ø 38)	[kgcm2]	--	92.00	76.72	71.23	68.28	66.08	65.00	64.38	64.10
Moment of Inertia (≤Ø 48)	[kgcm2]	--	126.90	111.60	106.10	103.10	100.90	99.86	99.25	98.97
Moment of Inertia (≤ Ø 65)	[kgcm2]	--	212.5	197.2	191.7	188.7	186.6	185.5	184.9	184.6
Efficiency	[%]	*10	93							
Torsional Rigidity	[Nm/arcmin]	*11	175							
Maximum Torsional Backlash	[Arc-min]	--	≤ 6							
Noise Level	dB [A]	*12	≤ 85							
Protection Class	--	*13	IP54 (IP65)							
Ambient Temperature	[°C]	--	0-40							
Permitted Housing Temperature	[°C]	--	90							
Weight	[kg]	*14	52							

EVS 180 3-Stage Specifications

Frame Size			**180**							
Ratio	Units	Note	15	16	20	25	28	30	35	40
Nominal Output Torque	[Nm]	*1	442	583	646	683	710	480	710	465
Maximum Acceleration Torque	[Nm]	*2	916	1315	1315	1315	1315	916	1315	1315
Maximum Torque	[Nm]	*3	916	1315	1315	1315	1315	916	1315	1315
Emergency Stop Torque	[Nm]	*4	2000	2500	2500	2500	2500	2000	2500	2500
Nominal Input Speed	[rpm]	*5	2100							
Maximum Input Speed	[rpm]	*6	4000							
No Load Running Torque	[Nm]	*7	4.7							
Maximum Radial Load	[N]	*8	19000							
Maximum Axial Load	[N]	*9	17000							
Moment of Inertia (≤ Ø 28)	[kgcm2]	--	11.42	12.03	11.11	10.96	11.57	10.31	10.82	10.23
Moment of Inertia (≤Ø 38)	[kgcm2]	--	20.21	20.82	19.90	19.74	20.36	19.10	19.60	19.02
Moment of Inertia (≤Ø 48)	[kgcm2]	--	25.03	25.64	24.72	24.56	25.18	23.92	24.42	23.84
Moment of Inertia (≤ Ø 65)	[kgcm2]	--	--	--	--	--	--	--	--	--
Efficiency	[%]	*10	88							
Torsional Rigidity	[Nm/arcmin]	*11	175							
Maximum Torsional Backlash	[Arc-min]	--	≤ 9							
Noise Level	dB [A]	*12	≤ 85							
Protection Class	--	*13	IP54 (IP65)							
Ambient Temperature	[°C]	--	0-40							
Permitted Housing Temperature	[°C]	--	90							
Weight	[kg]	*14	39							

EVS 180 3-Stage Specifications

Frame Size	**180**								
Ratio	Units	Note	45	50	60	70	80	90	100
Nominal Output Torque	[Nm]	*1	480	710	710	710	710	480	480
Maximum Acceleration Torque	[Nm]	*2	931	1315	1315	1315	1315	931	931
Maximum Torque	[Nm]	*3	931	1315	1315	1315	1315	931	931
Emergency Stop Torque	[Nm]	*4	2000	2500	2500	2500	2500	2000	2000
Nominal Input Speed	[rpm]	*5	2100						
Maximum Input Speed	[rpm]	*6	4000						
No Load Running Torque	[Nm]	*7	4.7						
Maximum Radial Load	[N]	*8	19000						
Maximum Axial Load	[N]	*9	17000						
Moment of Inertia (≤ Ø 28)	[kgcm2]	--	10.76	10.19	10.17	10.16	10.15	10.14	10.14
Moment of Inertia (≤Ø 38)	[kgcm2]	--	19.54	18.98	18.96	18.94	18.94	18.93	18.93
Moment of Inertia (≤Ø 48)	[kgcm2]	--	24.36	23.80	23.78	23.77	23.76	23.75	23.75
Moment of Inertia (≤ Ø 65)	[kgcm2]	--	--	--	--	--	--	--	--
Efficiency	[%]	*10	88						
Torsional Rigidity	[Nm/arcmin]	*11	175						
Maximum Torsional Backlash	[Arc-min]	--	≤ 9						
Noise Level	dB [A]	*12	≤ 85						
Protection Class	--	*13	IP54 (IP65)						
Ambient Temperature	[°C]	--	0-40						
Permitted Housing Temperature	[°C]	--	90						
Weight	[kg]	*14	39						

*1) At nominal input speed, service life is 20,000 hours

*2) The maximum torque when starting or stopping operation. Apply Cycle Factor f_0, found on page 468, for higher duty cycle applications

*3) Permitted 10,000 times during service life. Based on 10% of maximum radial load and smooth output shaft

*4) The maximum torque allowed under a stress situation. Permitted 1,000 times during service life

*5) The average input speed at nominal input torque. Maintain housing temperature below permitted value

*6) The maximum intermittent input speed

*7) Torque at no load applied to the input shaft at nominal input speed

*8) The maximum radial load that the gearbox can accept

*9) The maximum axial load that the gearbox can accept

*10) The efficiency at the nominal output torque rating

*11) This does not include lost motion

*12) Contact Nidec Drive Technology for the testing conditions and environment

*13) Various wash-down options are available. Contact Nidec Drive Technology for more details

*14) Weight may vary slightly between models

EVS 180 2-Stage Dimensions

Input bore size ≦φ38 mm

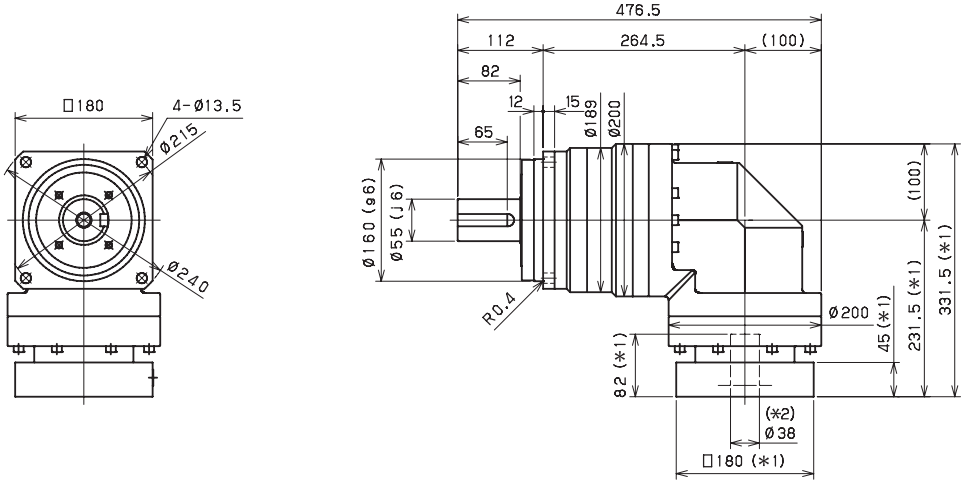

Input bore size ≦φ48 mm

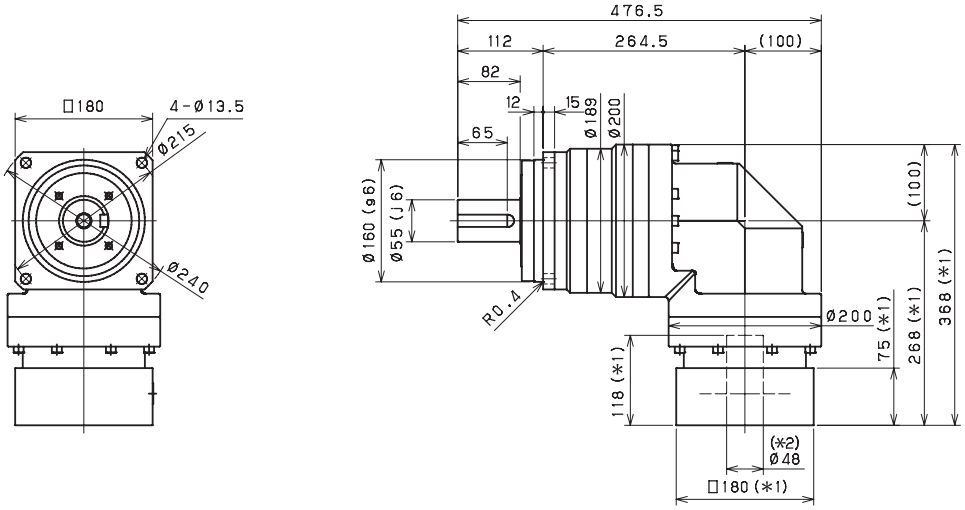

Input bore size ≦φ65 mm

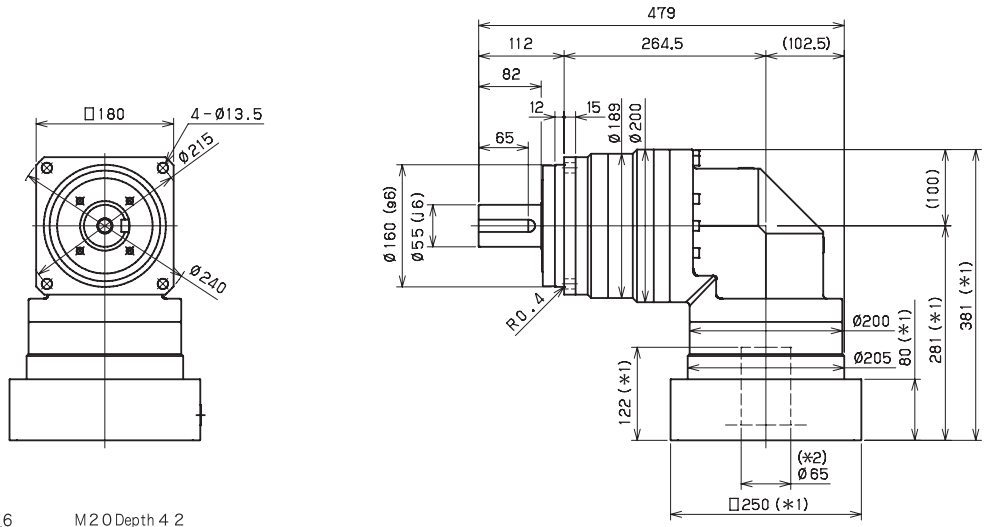

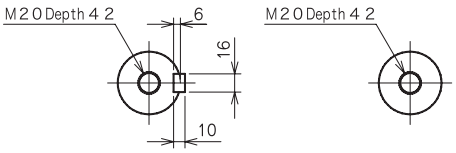

Keyed shaft　　Smooth shaft

*1) Length will vary depending on motor

*2) Bushing will be inserted to adapt to motor shaft

EVS 180 3-Stage Dimensions

Input bore size ≦φ28 mm

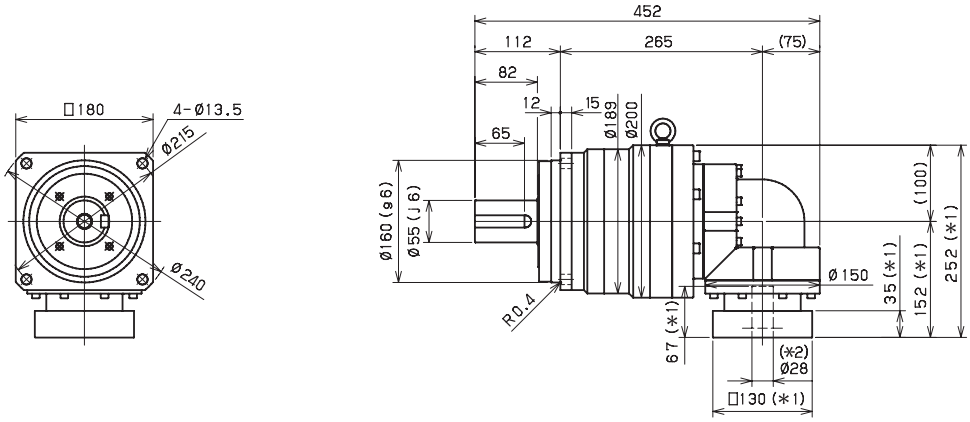

Input bore size ≦φ38 mm

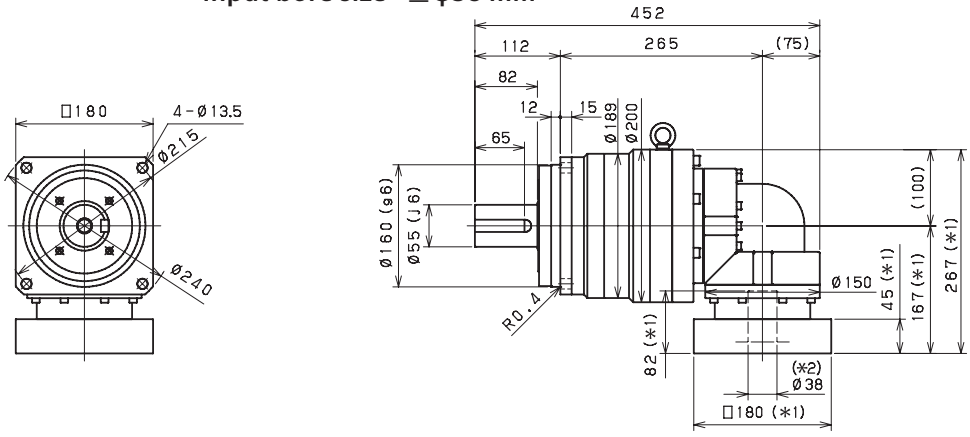

Input bore size ≦φ48 mm

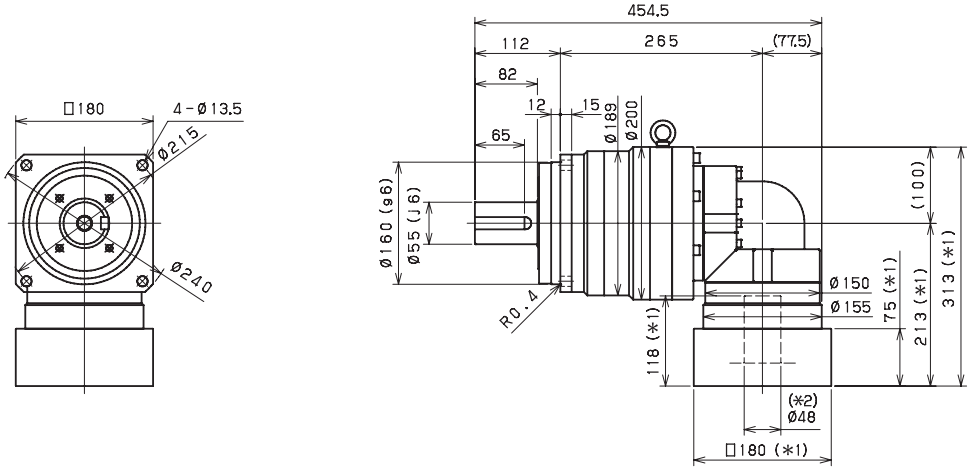

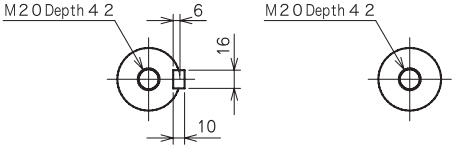

Keyed shaft　　Smooth shaft

*1) Length will vary depending on motor

*2) Bushing will be inserted to adapt to motor shaft

EVS

EVS 210 2-Stage Specifications

Frame Size	**210**									
Ratio	Units	Note	3	4	5	6	7	8	9	10
Nominal Output Torque	[Nm]	*1	575	765	960	1208	1313	1313	1064	1064
Maximum Acceleration Torque	[Nm]	*2	1160	1555	1945	2112	2112	2063	1812	1529
Maximum Torque	[Nm]	*3	1336	1861	2328	2441	2441	2339	2032	1787
Emergency Stop Torque	[Nm]	*4	2500	3300	4000	4500	4500	4500	3600	3600
Nominal Input Speed	[rpm]	*5	1200							
Maximum Input Speed	[rpm]	*6	3000							
No Load Running Torque	[Nm]	*7	14.5							
Maximum Radial Load	[N]	*8	24000							
Maximum Axial Load	[N]	*9	22000							
Moment of Inertia (≤Ø 38)	[kgcm2]	--	--	--	--	--	--	--	--	--
Moment of Inertia (≤Ø 48)	[kgcm2]	--	149.7	123.8	113.9	108.5	105.0	103.0	101.7	101.1
Moment of Inertia (≤ Ø 65)	[kgcm2]	--	224.9	199.0	189.1	183.7	180.3	178.2	176.9	176.3
Efficiency	[%]	*10	93							
Torsional Rigidity	[Nm/arcmin]	*11	400							
Maximum Torsional Backlash	[Arc-min]	--	≤ 6							
Noise Level	dB [A]	*12	≤ 85							
Protection Class	--	*13	IP54 (IP65)							
Ambient Temperature	[°C]	--	0-40							
Permitted Housing Temperature	[°C]	--	90							
Weight	[kg]	*14	71							

EVS 210 3-Stage Specifications

Frame Size	**210**									
Ratio	Units	Note	15	16	20	25	28	30	35	40
Nominal Output Torque	[Nm]	*1	858	1200	1200	1360	1440	948	1440	1440
Maximum Acceleration Torque	[Nm]	*2	1463	2112	2112	2112	2112	1463	2112	2112
Maximum Torque	[Nm]	*3	1463	2112	2112	2112	2112	1463	2112	2112
Emergency Stop Torque	[Nm]	*4	3600	4500	4500	4500	4500	3600	4500	4500
Nominal Input Speed	[rpm]	*5	1500							
Maximum Input Speed	[rpm]	*6	3000							
No Load Running Torque	[Nm]	*7	10.2							
Maximum Radial Load	[N]	*8	24000							
Maximum Axial Load	[N]	*9	22000							
Moment of Inertia (≤Ø 38)	[kgcm2]	--	36.39	37.30	35.79	35.49	36.41	34.41	35.22	34.26
Moment of Inertia (≤Ø 48)	[kgcm2]	--	66.21	67.12	65.61	65.31	66.23	64.23	65.04	64.08
Moment of Inertia (≤ Ø 65)	[kgcm2]	--	--	--	--	--	--	--	--	--
Efficiency	[%]	*10	88							
Torsional Rigidity	[Nm/arcmin]	*11	400							
Maximum Torsional Backlash	[Arc-min]	--	≤ 9							
Noise Level	dB [A]	*12	≤ 85							
Protection Class	--	*13	IP54 (IP65)							
Ambient Temperature	[°C]	--	0-40							
Permitted Housing Temperature	[°C]	--	90							
Weight	[kg]	*14	73							

EVS 210 3-Stage Specifications

Frame Size	**210**								
Ratio	Units	Note	45	50	60	70	80	90	100
Nominal Output Torque	[Nm]	*1	948	1440	1440	1440	1440	948	948
Maximum Acceleration Torque	[Nm]	*2	1246	2112	2112	2112	1728	1246	1131
Maximum Torque	[Nm]	*3	1246	2112	2112	2112	1728	1246	1131
Emergency Stop Torque	[Nm]	*4	3600	4500	4500	4500	4500	3600	3600
Nominal Input Speed	[rpm]	*5	1500						
Maximum Input Speed	[rpm]	*6	3000						
No Load Running Torque	[Nm]	*7	10.2						
Maximum Radial Load	[N]	*8	24000						
Maximum Axial Load	[N]	*9	22000						
Moment of Inertia (≤Ø 38)	[kgcm2]	--	35.11	34.18	34.14	34.12	34.10	34.09	34.08
Moment of Inertia (≤Ø 48)	[kgcm2]	--	64.92	64.00	63.96	63.93	63.92	63.90	63.90
Moment of Inertia (≤ Ø 65)	[kgcm2]	--	--	--	--	--	--	--	--
Efficiency	[%]	*10	88						
Torsional Rigidity	[Nm/arcmin]	*11	400						
Maximum Torsional Backlash	[Arc-min]	--	≤ 9						
Noise Level	dB [A]	*12	≤ 85						
Protection Class	--	*13	IP54 (IP65)						
Ambient Temperature	[°C]	--	0-40						
Permitted Housing Temperature	[°C]	--	90						
Weight	[kg]	*14	73						

*1) At nominal input speed, service life is 20,000 hours

*2) The maximum torque when starting or stopping operation. Apply Cycle Factor f_0, found on page 468, for higher duty cycle applications

*3) Permitted 10,000 times during service life. Based on 10% of maximum radial load and smooth output shaft

*4) The maximum torque allowed under a stress situation. Permitted 1,000 times during service life

*5) The average input speed at nominal input torque. Maintain housing temperature below permitted value

*6) The maximum intermittent input speed

*7) Torque at no load applied to the input shaft at nominal input speed

*8) The maximum radial load that the gearbox can accept

*9) The maximum axial load that the gearbox can accept

*10) The efficiency at the nominal output torque rating

*11) This does not include lost motion

*12) Contact Nidec Drive Technology for the testing conditions and environment

*13) Various wash-down options are available. Contact Nidec Drive Technology for more details

*14) Weight may vary slightly between models

EVS 210 2-Stage Dimensions

Input bore size ≦φ48 mm

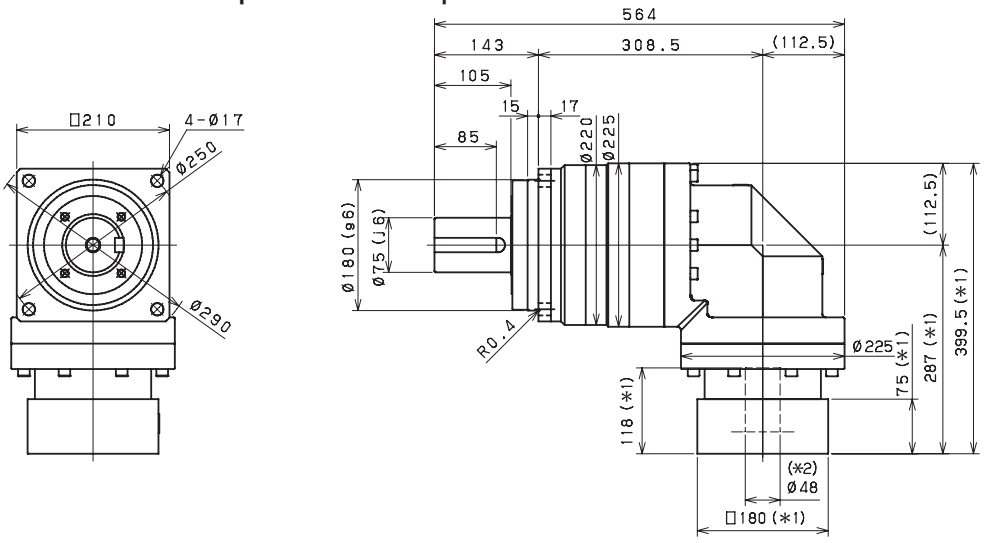

Input bore size ≦φ65 mm

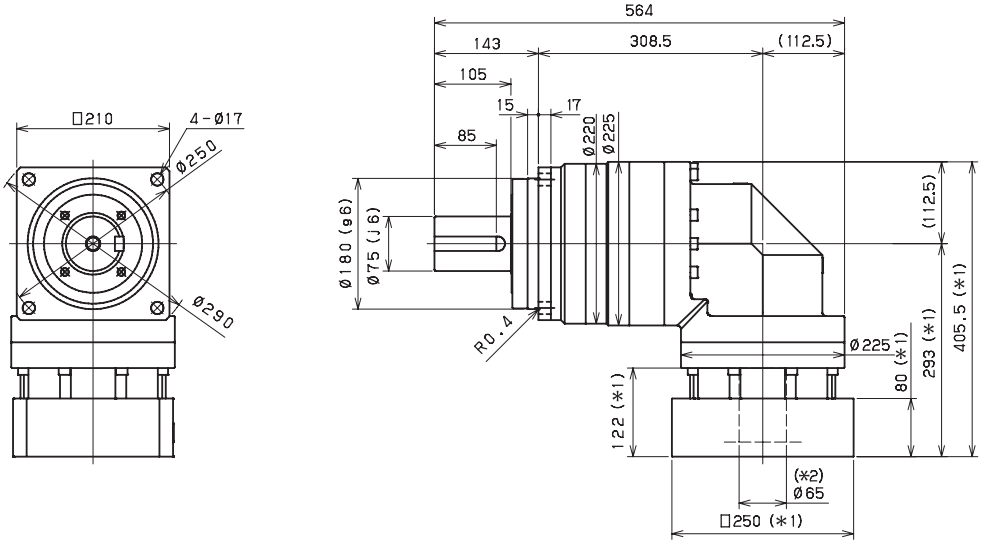

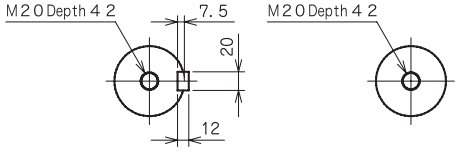

Keyed shaft　　Smooth shaft

*1) Length will vary depending on motor

*2) Bushing will be inserted to adapt to motor shaft

EVS 210 3-Stage Dimensions

Input bore size ≦φ38 mm

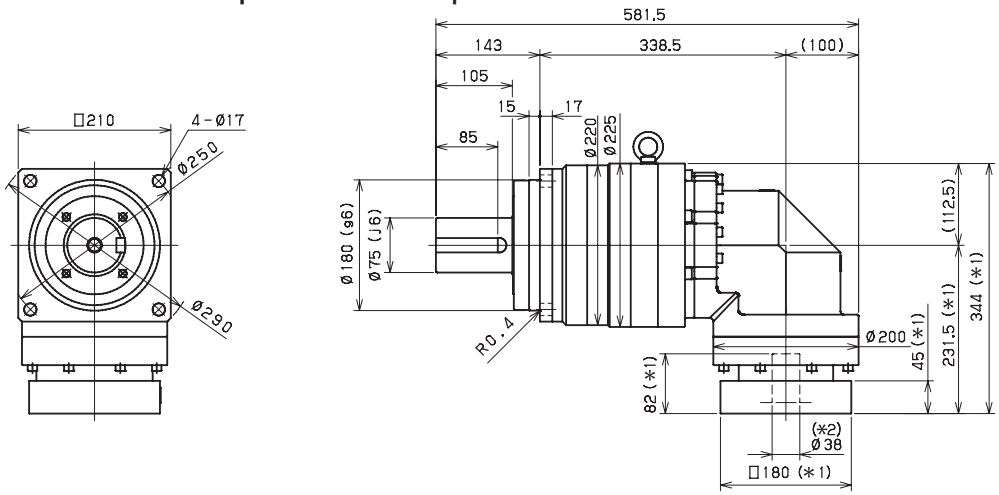

Input bore size ≦φ48 mm

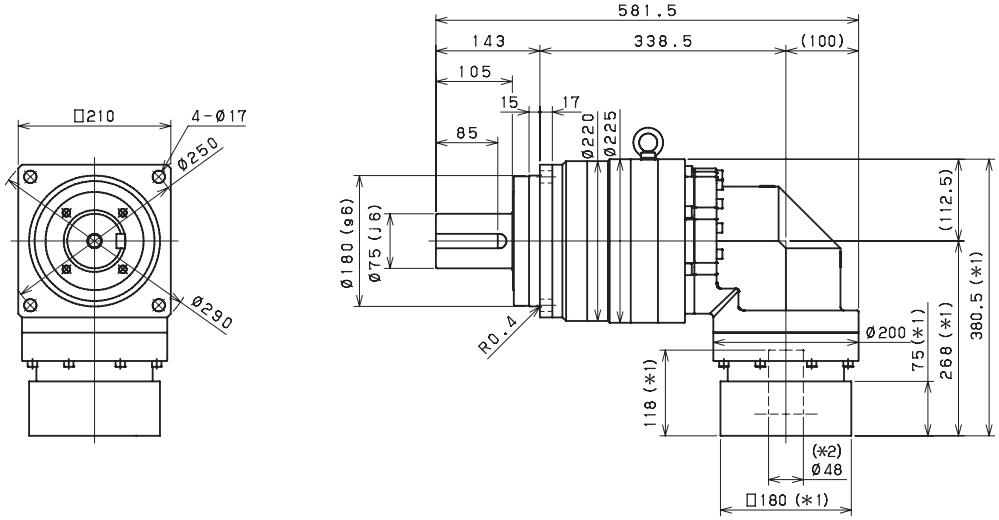

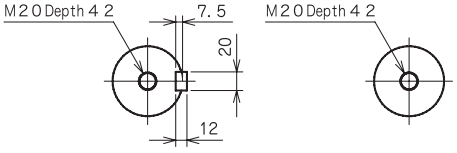

Keyed shaft

Smooth shaft

*1) Length will vary depending on motor

*2) Bushing will be inserted to adapt to motor shaft

EVS

EVS 240 2-Stage Specifications

Frame Size			**240**							
Ratio	Units	Note	3	4	5	6	7	8	9	10
Nominal Output Torque	[Nm]	*1	1005	1340	1680	1992	2024	2024	1534	1534
Maximum Acceleration Torque	[Nm]	*2	2334	3520	3520	3428	3428	3345	2873	2478
Maximum Torque	[Nm]	*3	2642	3891	3891	3809	3809	3724	3179	2781
Emergency Stop Torque	[Nm]	*4	4000	5400	6500	7200	7200	7200	5400	5400
Nominal Input Speed	[rpm]	*5	1200							
Maximum Input Speed	[rpm]	*6	3000							
No Load Running Torque	[Nm]	*7	25.3							
Maximum Radial Load	[N]	*8	30000							
Maximum Axial Load	[N]	*9	27000							
Moment of Inertia (≤Ø 48)	[kgcm2]	--	--	--	--	--	--	--	--	--
Moment of Inertia (≤ Ø 65)	[kgcm2]	--	217.5	156.7	134.5	122.4	112.9	108.3	105.5	104.0
Efficiency	[%]	*10	93							
Torsional Rigidity	[Nm/arcmin]	*11	550							
Maximum Torsional Backlash	[Arc-min]	--	≤ 6							
Noise Level	dB [A]	*12	≤ 85							
Protection Class	--	*13	IP54 (IP65)							
Ambient Temperature	[°C]	--	0-40							
Permitted Housing Temperature	[°C]	--	90							
Weight	[kg]	*14	122							

EVS 240 3-Stage Specifications

Frame Size			**240**							
Ratio	Units	Note	15	16	20	25	28	30	35	40
Nominal Output Torque	[Nm]	*1	1405	1920	1992	2154	2195	1405	2195	2195
Maximum Acceleration Torque	[Nm]	*2	2334	3520	3520	3520	3460	2334	3460	3520
Maximum Torque	[Nm]	*3	2334	3520	3520	3520	3460	2334	3460	3520
Emergency Stop Torque	[Nm]	*4	5400	7200	7200	7200	7200	5400	7200	7200
Nominal Input Speed	[rpm]	*5	1500							
Maximum Input Speed	[rpm]	*6	3000							
No Load Running Torque	[Nm]	*7	16.4							
Maximum Radial Load	[N]	*8	30000							
Maximum Axial Load	[N]	*9	27000							
Moment of Inertia (≤Ø 48)	[kgcm2]	--	40.47	42.59	39.21	38.59	40.73	35.09	38.02	34.78
Moment of Inertia (≤ Ø 65)	[kgcm2]	--	--	--	--	--	--	--	--	--
Efficiency	[%]	*10	88							
Torsional Rigidity	[Nm/arcmin]	*11	550							
Maximum Torsional Backlash	[Arc-min]	--	≤ 9							
Noise Level	dB [A]	*12	≤ 85							
Protection Class	--	*13	IP54 (IP65)							
Ambient Temperature	[°C]	--	0-40							
Permitted Housing Temperature	[°C]	--	90							
Weight	[kg]	*14	113							

EVS 240 3-Stage Specifications

Frame Size	**240**								
Ratio	Units	Note	45	50	60	70	80	90	100
Nominal Output Torque	[Nm]	*1	1405	2195	2195	2195	2195	1405	1405
Maximum Acceleration Torque	[Nm]	*2	2000	3520	3428	3460	2563	2000	1718
Maximum Torque	[Nm]	*3	2000	3520	3428	3460	2563	2000	1718
Emergency Stop Torque	[Nm]	*4	5400	7200	7200	7200	7200	5400	5400
Nominal Input Speed	[rpm]	*5	1500						
Maximum Input Speed	[rpm]	*6	3000						
No Load Running Torque	[Nm]	*7	16.4						
Maximum Radial Load	[N]	*8	30000						
Maximum Axial Load	[N]	*9	27000						
Moment of Inertia (≤Ø 48)	[kgcm2]	--	37.78	34.62	34.53	34.48	34.45	34.42	34.41
Moment of Inertia (≤ Ø 65)	[kgcm2]	--	--	--	--	--	--	--	--
Efficiency	[%]	*10	88						
Torsional Rigidity	[Nm/arcmin]	*11	550						
Maximum Torsional Backlash	[Arc-min]	--	≤ 9						
Noise Level	dB [A]	*12	≤ 85						
Protection Class	--	*13	IP54 (IP65)						
Ambient Temperature	[°C]	--	0-40						
Permitted Housing Temperature	[°C]	--	90						
Weight	[kg]	*14	113						

*1) At nominal input speed, service life is 20,000 hours

*2) The maximum torque when starting or stopping operation. Apply Cycle Factor $\mathbf{f_0}$, found on page 468, for higher duty cycle applications

*3) Permitted 10,000 times during service life. Based on 10% of maximum radial load and smooth output shaft

*4) The maximum torque allowed under a stress situation. Permitted 1,000 times during service life

*5) The average input speed at nominal input torque. Maintain housing temperature below permitted value

*6) The maximum intermittent input speed

*7) Torque at no load applied to the input shaft at nominal input speed

*8) The maximum radial load that the gearbox can accept

*9) The maximum axial load that the gearbox can accept

*10) The efficiency at the nominal output torque rating

*11) This does not include lost motion

*12) Contact Nidec Drive Technology for the testing conditions and environment

*13) Various wash-down options are available. Contact Nidec Drive Technology for more details

*14) Weight may vary slightly between models

EVS 240 2-Stage Dimensions

Input bore size ≦φ65 mm

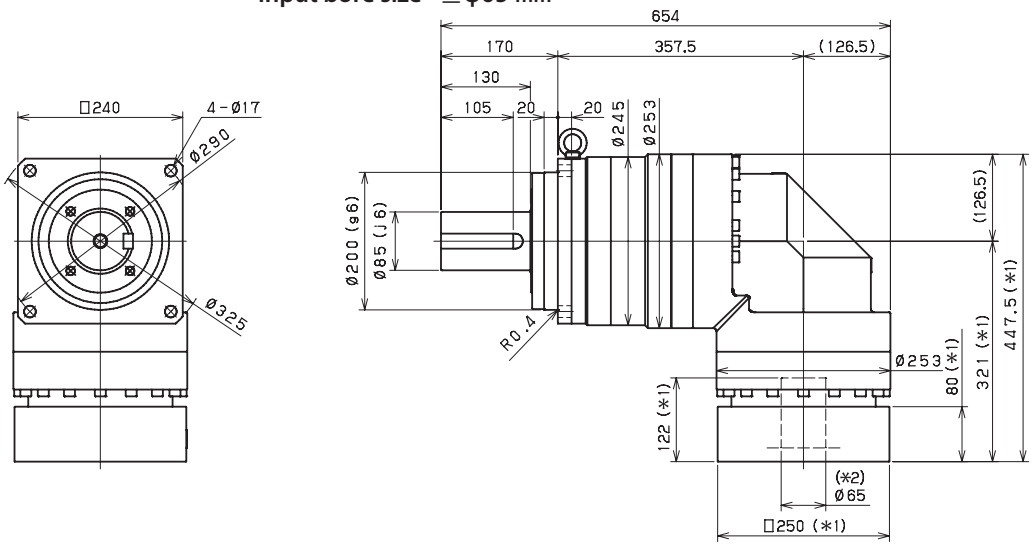

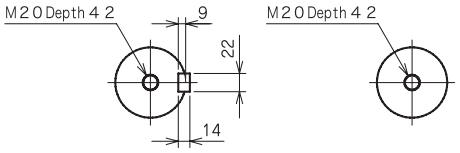

Keyed shaft　　Smooth shaft

*1) Length will vary depending on motor

*2) Bushing will be inserted to adapt to motor shaft

EVS 240 3-Stage Dimensions

Input bore size ≦φ48 mm

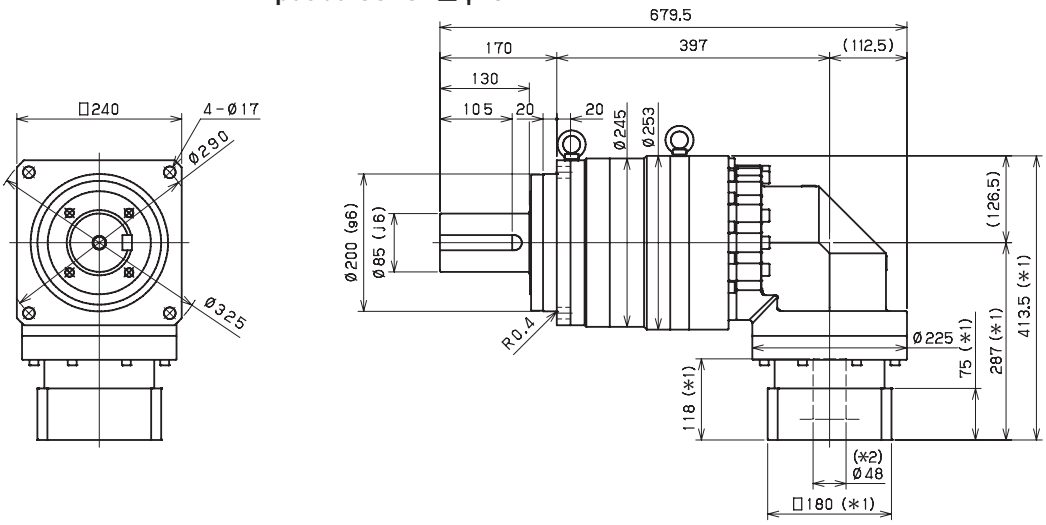

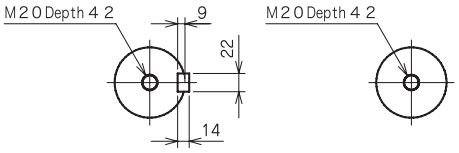

Keyed shaft　　Smooth shaft

*1) Length will vary depending on motor

*2) Bushing will be inserted to adapt to motor shaft

EVS

EVT SERIES

The EVT combines the compactness and performance of the VRT series with a right angle bevel system to provide the ultimate space saving solution for highly dynamic applications. The ISO flange interface allows for easy mounting of index tables, pinions, timing belt pulleys and other mechanical components without the need for a coupling.

The EVT is advantageous in applications requiring high accuracy, torsional stiffness and moment loading. Oversized dual tapered roller bearings allow the EVT to handle larger radial and thrust forces found in applications within the machine tool, aerospace or robotics industries. Available ratios range from 3:1 to 100:1—a total of 20 ratio configurations, giving machine builders more design flexibility than ever before.

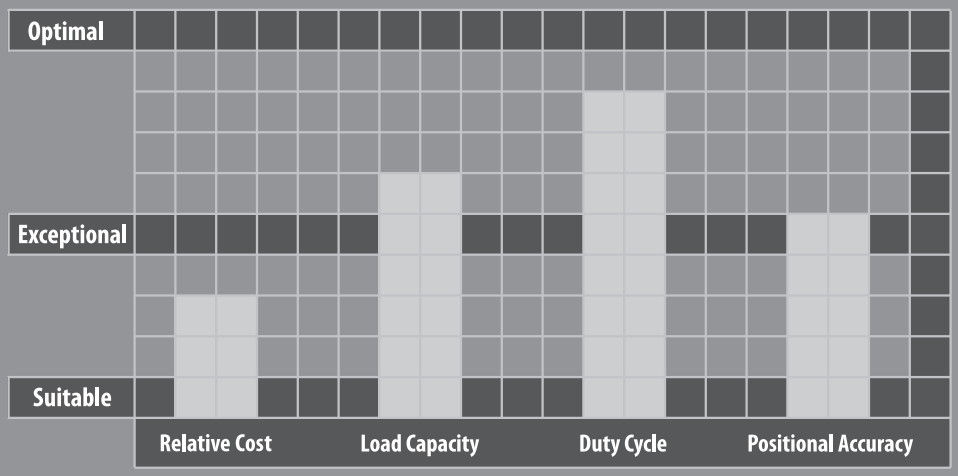

EVT SERIES

- The most compact and robust option for machine builders
- ISO robotics industry mounting interface allowing superior flexibility in mounting of pinions, pulleys and turntables
- Best-in-class backlash (≤4 arc-min)
- Space-saving design, when minimal envelope is required
- Exceptional torsional rigidity for high positional accuracy needs
- Broad range of mounting adapters offer a simple, precise attachment to any motor
- Maintenance free solution that is lubricated for life. High performance grease allows flexible mounting in any orientation

EVT Series Features

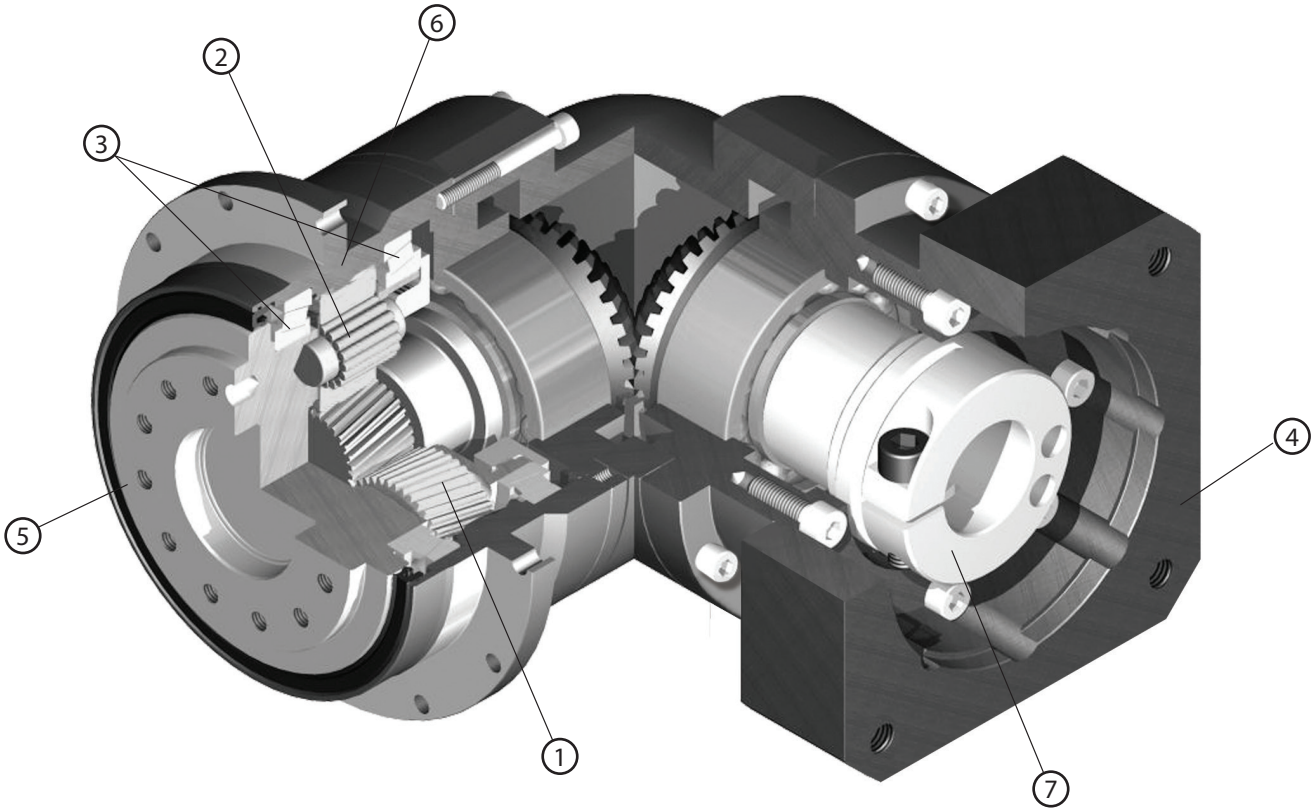

1. Carburized helical gears with proprietary secondary finishing process for higher accuracy and smooth, quite operation
2. Uncaged needle roller bearings allow for higher rigidity and torque
3. One piece output shaft and planet carrier with two robust tapered bearings straddling the planet gears. Higher radial/axial load capacity, stiffness, torque density and safety factor, with guaranteed alignment of gearing
4. Optimized mounting system with active centering on motor pilot diameter guarantees alignment of motor. Motor can be installed in any orientation
5. ISO output flange allows easy mounting to indexing tables, pinions, timing belt pulleys and other mechanical components
6. Ring gear machined directly into the housing, not welded or pressed in. Greater concentricity and elimination of speed fluctuation
7. True concentric motor shaft clamping connection, optimized for your specific motor. Reduced inertia for dynamic performance and balanced for high speed operation

EVT Series Model Code

EVT – 090 B – 25 – F 4 – 14BK14

- 14BK14 — Motor mounting code (*1)
- 4 — Backlash: ≤4 -9 arc-min
- F — Output mounting style: F: Flanged
- 25 — Ratio: 2-Stage: 4, 5, 6, 7, 8, 9, 10; 3-Stage: 15, 20, 25, 28, 35, 40, 45, 50, 60, 70, 80, 90, 100
- B — Design version
- 090 — Frame size: 064, 090, 110, 140, 200, 255
- EVT — Series

*1) Motor mounting code varies depending on the motor. Use the selection tool link below to configure the code.

EVT

Contact us for additional information or refer to our online gearbox selection tool.

Selection tool https://www.nidec-drivetechnology.co.jp/selection/all/

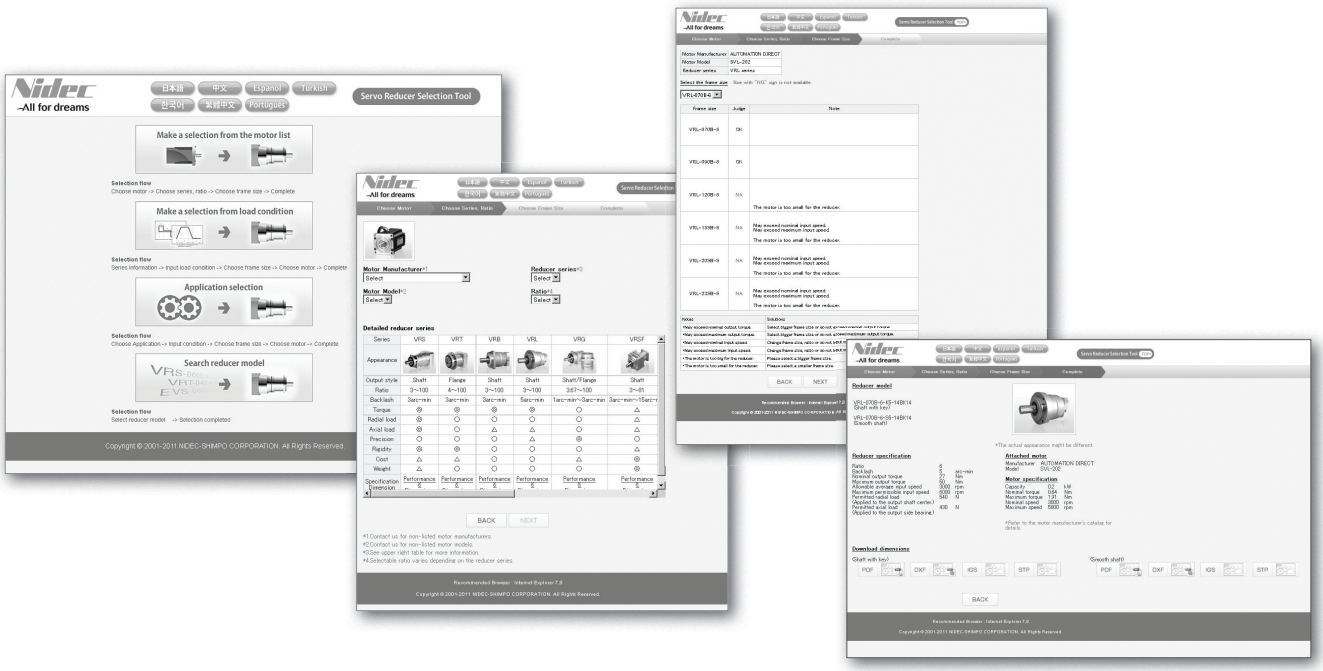

EVT 064 2-Stage Specifications

Frame Size			**064**						
Ratio	Unit	Note	4	5	6	7	8	9	10
Nominal Output Torque	[Nm]	*1	16	22	24	24	24	19	19
Maximum Acceleration Torque	[Nm]	*2	38	48	54	54	54	38	38
Maximum Torque	[Nm]	*3	45	56	63	63	61	45	45
Emergency Stop Torque	[Nm]	*4	65	80	90	90	90	65	65
Nominal Input Speed	[rpm]	*5	3300						
Maximum Input Speed	[rpm]	*6	6000						
No Load Running Torque	[Nm]	*7	0.33						
Maximum Radial Load	[N]	*8	1500						
Maximum Axial Load	[N]	*9	750						
Maximum Tilting Moment	[Nm]	*10	58						
Moment of Inertia (≤ Ø 8)	[kgcm2]	--	0.305	0.273	0.256	0.246	0.240	0.236	0.233
Moment of Inertia (≤ Ø 14)	[kgcm2]	--	0.379	0.348	0.331	0.321	0.315	0.311	0.308
Moment of Inertia (≤ Ø 19)	[kgcm2]	--	0.569	0.537	0.521	0.510	0.504	0.500	0.497
Efficiency	[%]	*11	93						
Torsional Rigidity	[Nm/arcmin]	*12	7.5						
Maximum Torsional Backlash	[Arc-min]	--	≤ 4						
Noise Level	dB [A]	*13	≤ 80						
Protection Class	--	*14	IP54 (IP65)						
Ambient Temperature	[°C]	--	0-40						
Permitted Housing Temperature	[°C]	--	90						
Weight	[kg]	*15	1.9						

EVT 064 3-Stage Specifications

Frame Size			**064**						
Ratio	Unit	Note	16	20	25	28	35	40	45
Nominal Output Torque	[Nm]	*1	26	26	28	28	28	28	19
Maximum Acceleration Torque	[Nm]	*2	54	54	54	54	54	54	38
Maximum Torque	[Nm]	*3	54	54	54	54	54	54	38
Emergency Stop Torque	[Nm]	*4	90	90	90	90	90	90	65
Nominal Input Speed	[rpm]	*5	3800						
Maximum Input Speed	[rpm]	*6	6000						
No Load Running Torque	[Nm]	*7	0.2						
Maximum Radial Load	[N]	*8	1500						
Maximum Axial Load	[N]	*9	750						
Maximum Tilting Moment	[Nm]	*10	58						
Moment of Inertia (≤ Ø 8)	[kgcm2]	--	0.082	0.073	0.072	0.078	0.071	0.062	0.070
Moment of Inertia (≤ Ø 14)	[kgcm2]	--	0.126	0.118	0.116	0.123	0.115	0.106	0.115
Moment of Inertia (≤ Ø 19)	[kgcm2]	--	--	--	--	--	--	--	--
Efficiency	[%]	*11	88						
Torsional Rigidity	[Nm/arcmin]	*12	7.5						
Maximum Torsional Backlash	[Arc-min]	--	≤ 7						
Noise Level	dB [A]	*13	≤ 80						
Protection Class	--	*14	IP54 (IP65)						
Ambient Temperature	[°C]	--	0-40						
Permitted Housing Temperature	[°C]	--	90						
Weight	[kg]	*15	1.6						

EVT 064 3-Stage Specifications

Frame Size	064							
Ratio	Unit	Note	50	60	70	80	90	100
Nominal Output Torque	[Nm]	*1	28	28	28	28	19	19
Maximum Acceleration Torque	[Nm]	*2	54	54	54	54	38	38
Maximum Torque	[Nm]	*3	54	54	54	54	38	38
Emergency Stop Torque	[Nm]	*4	90	90	90	90	65	65
Nominal Input Speed	[rpm]	*5	3800					
Maximum Input Speed	[rpm]	*6	6000					
No Load Running Torque	[Nm]	*7	0.2					
Maximum Radial Load	[N]	*8	1500					
Maximum Axial Load	[N]	*9	750					
Maximum Tilting Moment	[Nm]	*10	58					
Moment of Inertia (≤ Ø 8)	[kgcm2]	--	0.061	0.061	0.061	0.061	0.061	0.061
Moment of Inertia (≤ Ø 14)	[kgcm2]	--	0.106	0.106	0.106	0.106	0.106	0.105
Moment of Inertia (≤ Ø 19)	[kgcm2]	--	--	--	--	--	--	--
Efficiency	[%]	*11	88					
Torsional Rigidity	[Nm/arcmin]	*12	7.5					
Maximum Torsional Backlash	[Arc-min]	--	≤ 7					
Noise Level	dB [A]	*13	≤ 80					
Protection Class	--	*14	IP54 (IP65)					
Ambient Temperature	[°C]	--	0-40					
Permitted Housing Temperature	[°C]	--	90					
Weight	[kg]	*15	1.6					

*1) At nominal input speed, service life is 20,000 hours

*2) The maximum torque when starting or stopping operation. Apply Cycle Factor f_0, found on page 468, for higher duty cycle applications

*3) Permitted 10,000 times during service life. Based on 10% of maximum radial load and smooth output shaft

*4) The maximum torque allowed under a stress situation. Permitted 1,000 times during service life

*5) The average input speed at nominal input torque. Maintain housing temperature below permitted value

*6) The maximum intermittent input speed

*7) Torque at no load applied to the input shaft at nominal input speed

*8) The maximum radial load that the gearbox can accept

*9) The maximum axial load that the gearbox can accept

*10) The moment is the maximum load at output flange surface

*11) The efficiency at the nominal output torque rating

*12) This does not include lost motion

*13) Contact Nidec Drive Technology for the testing conditions and environment

*14) Various wash-down options are available. Contact Nidec Drive Technology for more details

*15) Weight may vary slightly between models

EVT 064 2-Stage Dimensions

Input bore size ≤ø8mm

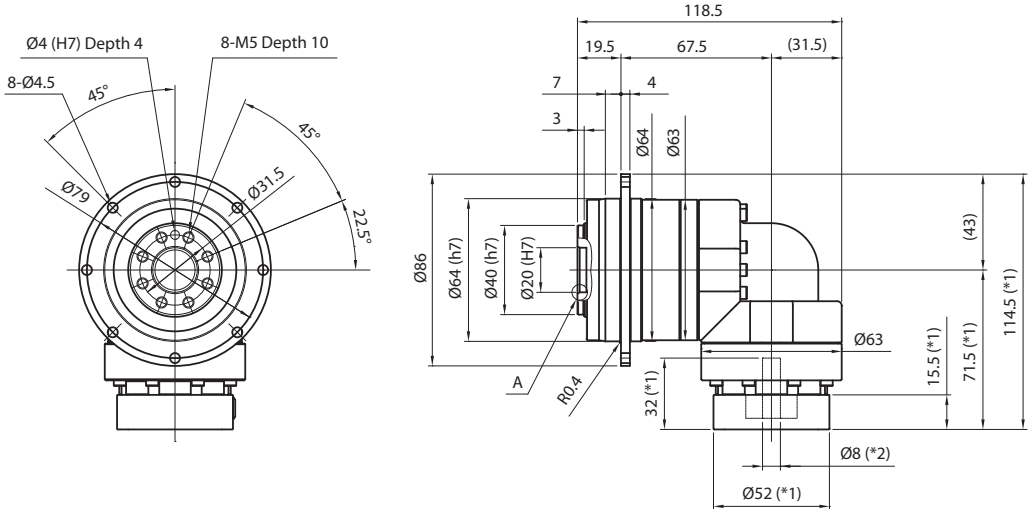

Input bore size ≤ø14mm

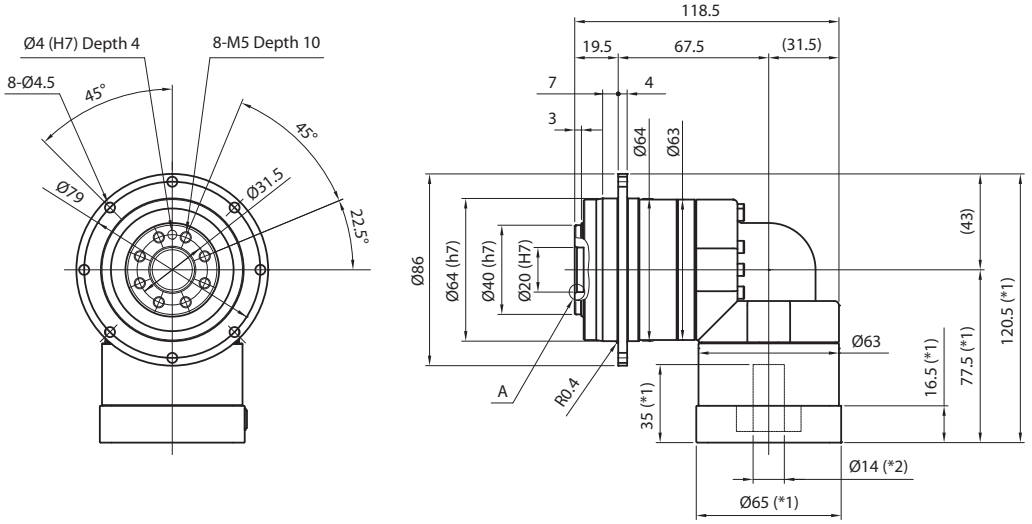

Input bore size ≤ø19mm

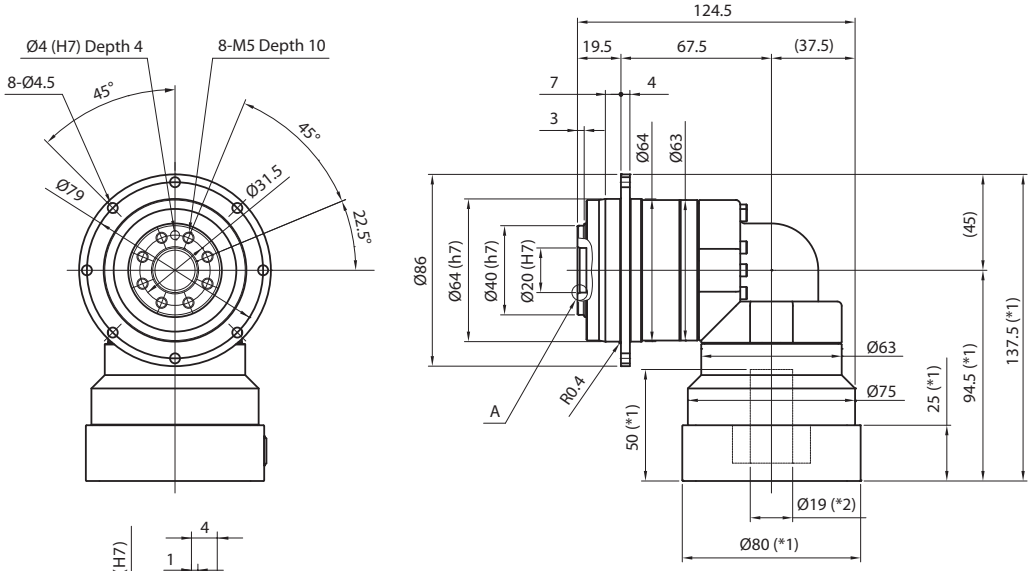

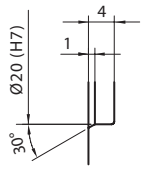

Enlarged detail A

*1) Length will vary depending on motor

*2) Bushing will be inserted to adapt to motor shaft

EVT 064 3-Stage Dimensions

Input bore size ≤ø8mm

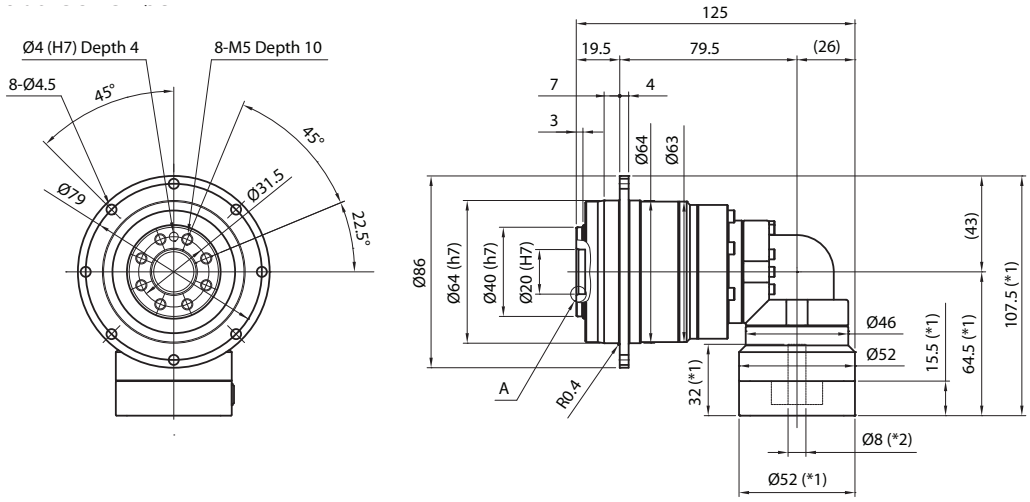

Input bore size ≤ø14mm

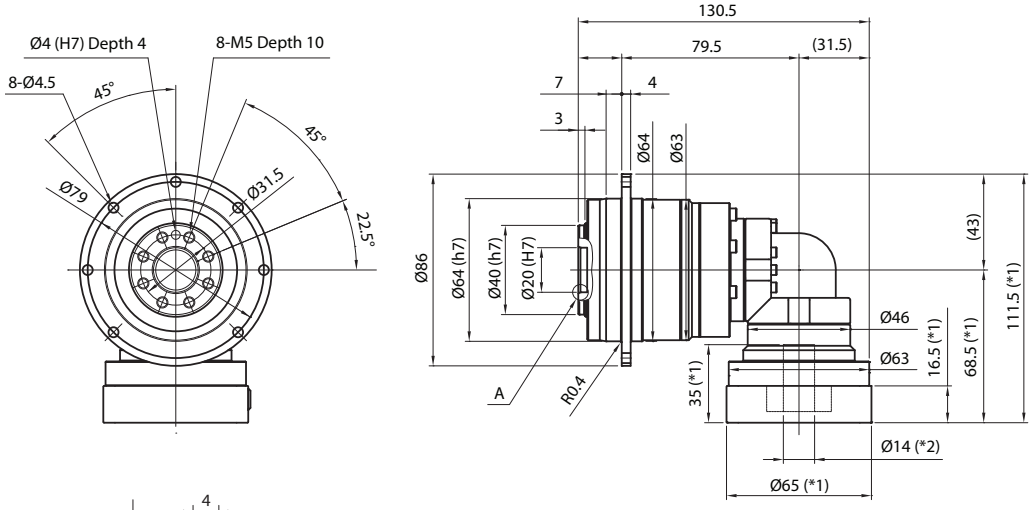

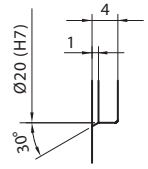

Enlarged detail A

*1) Length will vary depending on motor

*2) Bushing will be inserted to adapt to motor shaft

EVT

EVT 090 2-Stage Specifications

Frame Size			**090**						
Ratio	Unit	Note	4	5	6	7	8	9	10
Nominal Output Torque	[Nm]	*1	61	67	67	67	74	51	51
Maximum Acceleration Torque	[Nm]	*2	105	105	105	105	105	78	78
Maximum Torque	[Nm]	*3	121	121	119	119	117	93	93
Emergency Stop Torque	[Nm]	*4	170	220	220	220	220	170	170
Nominal Input Speed	[rpm]	*5	3000						
Maximum Input Speed	[rpm]	*6	6000						
No Load Running Torque	[Nm]	*7	1.13						
Maximum Radial Load	[N]	*8	3300						
Maximum Axial Load	[N]	*9	1700						
Maximum Tilting Moment	[Nm]	*10	170						
Moment of Inertia (≤ Ø 8)	[kgcm2]	--	--	--	--	--	--	--	--
Moment of Inertia (≤ Ø 14)	[kgcm2]	--	2.17	1.98	1.88	1.81	1.78	1.75	1.73
Moment of Inertia (≤ Ø 19)	[kgcm2]	--	2.50	2.31	2.21	2.14	2.10	2.08	2.06
Moment of Inertia (≤ Ø 28)	[kgcm2]	--	4.63	4.43	4.33	4.27	4.23	4.21	4.19
Efficiency	[%]	*11	93						
Torsional Rigidity	[Nm/arcmin]	*12	22						
Maximum Torsional Backlash	[Arc-min]	--	≤ 4						
Noise Level	dB [A]	*13	≤ 80						
Protection Class	--	*14	IP54 (IP65)						
Ambient Temperature	[°C]	--	0-40						
Permitted Housing Temperature	[°C]	--	90						
Weight	[kg]	*15	5.1						

EVT 090 3-Stage Specifications

Frame Size			**090**						
Ratio	Unit	Note	16	20	25	28	35	40	45
Nominal Output Torque	[Nm]	*1	66	68	72	78	73	78	47
Maximum Acceleration Torque	[Nm]	*2	128	128	128	128	128	128	78
Maximum Torque	[Nm]	*3	128	128	128	128	128	128	78
Emergency Stop Torque	[Nm]	*4	220	220	220	220	220	220	170
Nominal Input Speed	[rpm]	*5	3300						
Maximum Input Speed	[rpm]	*6	6000						
No Load Running Torque	[Nm]	*7	0.55						
Maximum Radial Load	[N]	*8	3300						
Maximum Axial Load	[N]	*9	1700						
Maximum Tilting Moment	[Nm]	*10	170						
Moment of Inertia (≤ Ø 8)	[kgcm2]	--	0.40	0.34	0.33	0.38	0.32	0.25	0.32
Moment of Inertia (≤ Ø 14)	[kgcm2]	--	0.48	0.41	0.41	0.45	0.40	0.33	0.40
Moment of Inertia (≤ Ø 19)	[kgcm2]	--	0.66	0.60	0.59	0.64	0.59	0.51	0.59
Moment of Inertia (≤ Ø 28)	[kgcm2]	--	--	--	--	--	--	--	--
Efficiency	[%]	*11	88						
Torsional Rigidity	[Nm/arcmin]	*12	22						
Maximum Torsional Backlash	[Arc-min]	--	≤ 7						
Noise Level	dB [A]	*13	≤ 80						
Protection Class	--	*14	IP54 (IP65)						
Ambient Temperature	[°C]	--	0-40						
Permitted Housing Temperature	[°C]	--	90						
Weight	[kg]	*15	4.3						

EVT 090 3-Stage Specifications

Frame Size	090							
Ratio	Unit	Note	50	60	70	80	90	100
Nominal Output Torque	[Nm]	*1	73	73	73	78	52	52
Maximum Acceleration Torque	[Nm]	*2	128	128	128	128	78	78
Maximum Torque	[Nm]	*3	128	128	128	128	78	78
Emergency Stop Torque	[Nm]	*4	220	220	220	220	170	170
Nominal Input Speed	[rpm]	*5	3300					
Maximum Input Speed	[rpm]	*6	6000					
No Load Running Torque	[Nm]	*7	0.55					
Maximum Radial Load	[N]	*8	3300					
Maximum Axial Load	[N]	*9	1700					
Maximum Tilting Moment	[Nm]	*10	170					
Moment of Inertia (≤ Ø 8)	[kgcm2]	--	0.25	0.25	0.25	0.25	0.25	0.25
Moment of Inertia (≤ Ø 14)	[kgcm2]	--	0.32	0.32	0.32	0.32	0.32	0.32
Moment of Inertia (≤ Ø 19)	[kgcm2]	--	0.51	0.51	0.51	0.51	0.51	0.51
Moment of Inertia (≤ Ø 28)	[kgcm2]	--	--	--	--	--	--	--
Efficiency	[%]	*11	88					
Torsional Rigidity	[Nm/arcmin]	*12	22					
Maximum Torsional Backlash	[Arc-min]	--	≤ 7					
Noise Level	dB [A]	*13	≤ 80					
Protection Class	--	*14	IP54 (IP65)					
Ambient Temperature	[°C]	--	0-40					
Permitted Housing Temperature	[°C]	--	90					
Weight	[kg]	*15	4.3					

*1) At nominal input speed, service life is 20,000 hours

*2) The maximum torque when starting or stopping operation. Apply Cycle Factor f_0, found on page 468, for higher duty cycle applications

*3) Permitted 10,000 times during service life. Based on 10% of maximum radial load and smooth output shaft

*4) The maximum torque allowed under a stress situation. Permitted 1,000 times during service life

*5) The average input speed at nominal input torque. Maintain housing temperature below permitted value

*6) The maximum intermittent input speed

*7) Torque at no load applied to the input shaft at nominal input speed

*8) The maximum radial load that the gearbox can accept

*9) The maximum axial load that the gearbox can accept

*10) The moment is the maximum load at output flange surface

*11) The efficiency at the nominal output torque rating

*12) This does not include lost motion

*13) Contact Nidec Drive Technology for the testing conditions and environment

*14) Various wash-down options are available. Contact Nidec Drive Technology for more details

*15) Weight may vary slightly between models

EVT 090 2-Stage Dimensions

Input bore size ≤ø14mm

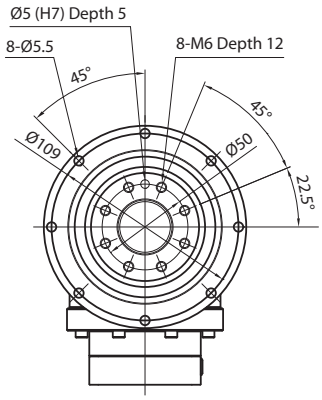

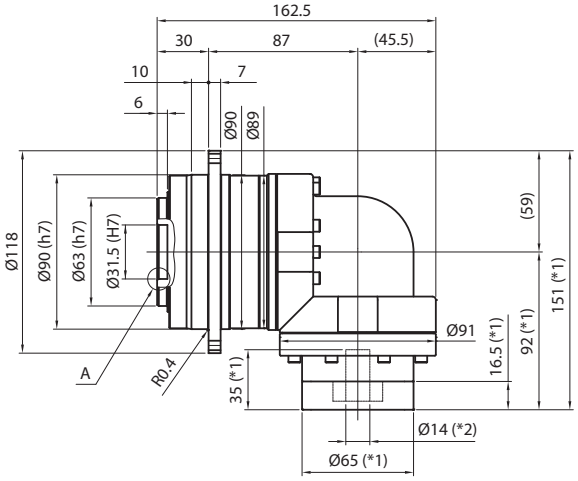

Input bore size ≤ø19mm

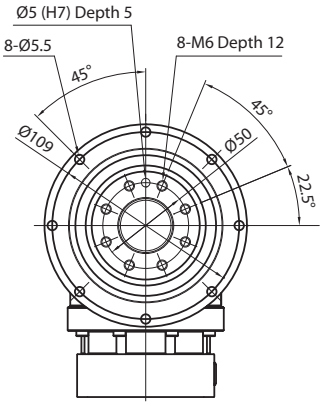

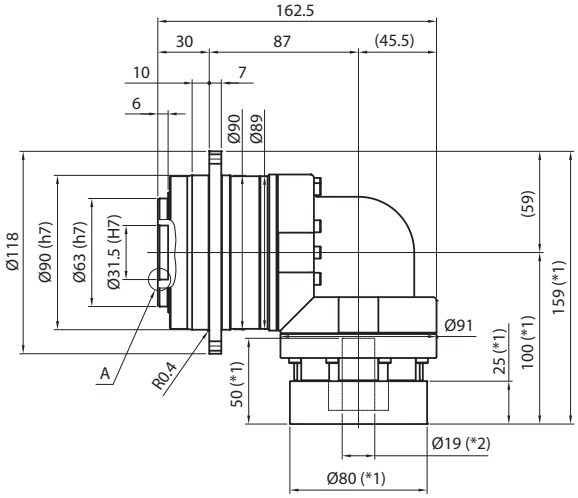

Input bore size ≤ø28mm

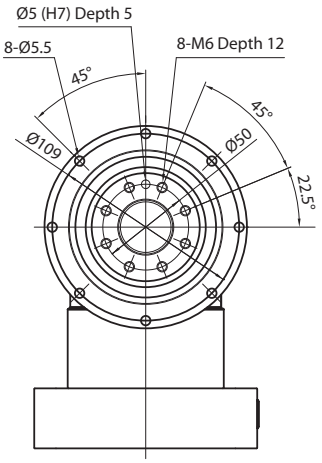

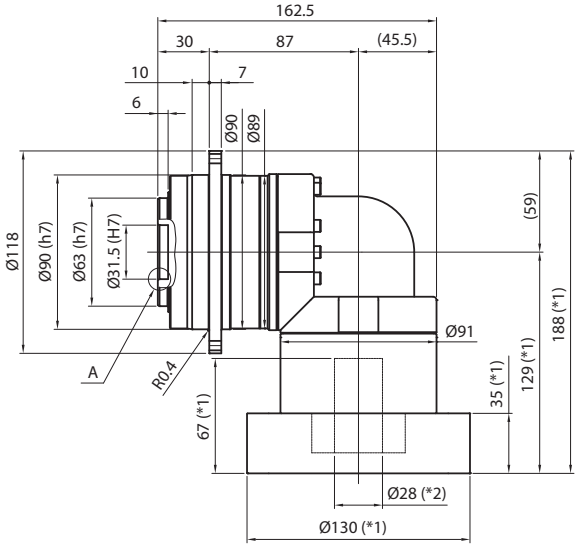

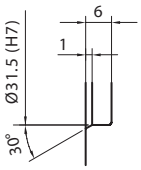

Enlarged detail A

*1) Length will vary depending on motor

*2) Bushing will be inserted to adapt to motor shaft

EVT 090 3-Stage Dimensions

Input bore size ≤ø8mm

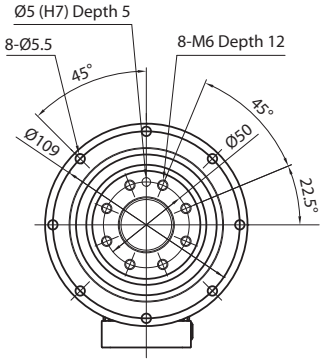

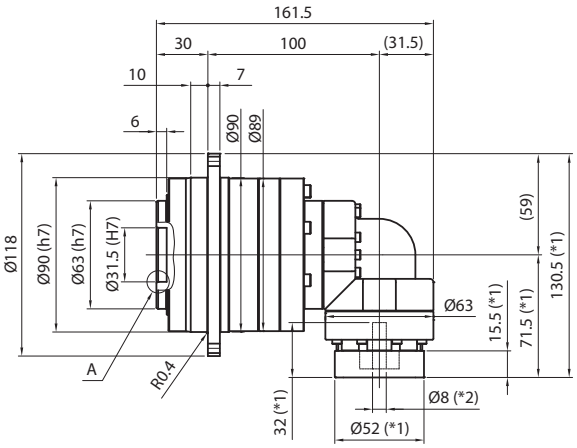

Input bore size ≤ø14mm

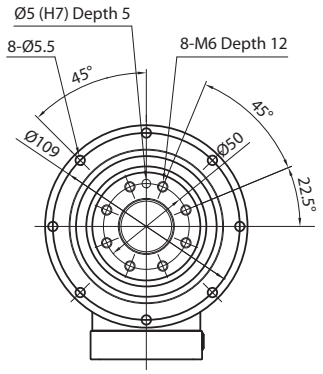

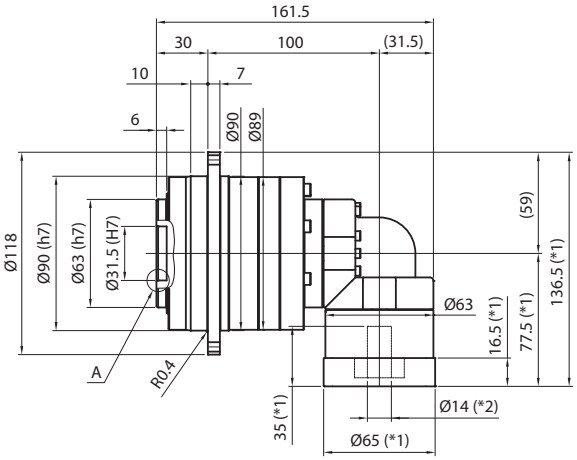

Input bore size ≤ø19mm

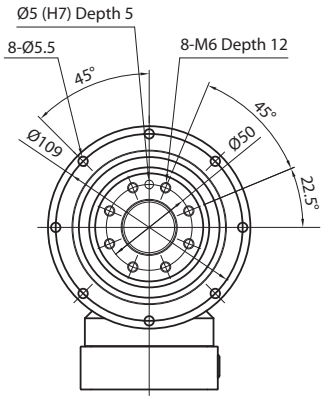

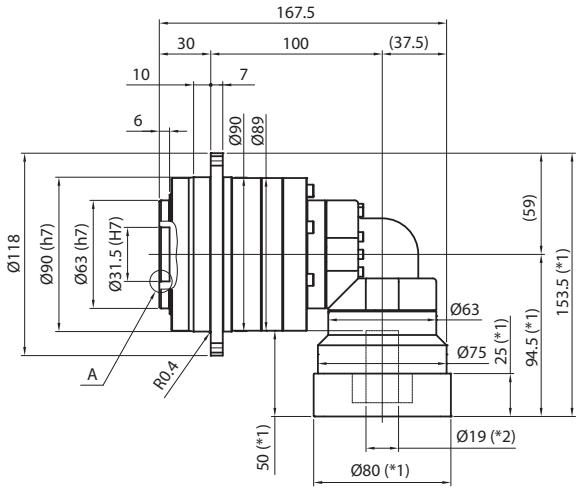

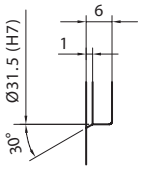

Enlarged detail A

*1) Length will vary depending on motor

*2) Bushing will be inserted to adapt to motor shaft

EVT

EVT 110 2-Stage Specifications

Frame Size	**110**					
Ratio	Unit	Note	4	5	7	10
Nominal Output Torque	[Nm]	*1	108	123	154	128
Maximum Acceleration Torque	[Nm]	*2	227	272	340	240
Maximum Torque	[Nm]	*3	271	325	401	288
Emergency Stop Torque	[Nm]	*4	430	500	550	450
Nominal Input Speed	[rpm]	*5	3000			
Maximum Input Speed	[rpm]	*6	6000			
No Load Running Torque	[Nm]	*7	1.88			
Maximum Radial Load	[N]	*8	12000			
Maximum Axial Load	[N]	*9	8800			
Maximum Tilting Moment	[Nm]	*10	990			
Moment of Inertia (≤ Ø 14)	[kgcm2]	--	--	--	--	--
Moment of Inertia (≤ Ø 19)	[kgcm2]	--	6.46	5.65	4.97	4.62
Moment of Inertia (≤ Ø 28)	[kgcm2]	--	8.06	7.24	6.56	6.21
Moment of Inertia (≤ Ø 38)	[kgcm2]	--	15.13	14.31	13.63	13.28
Efficiency	[%]	*11	93			
Torsional Rigidity	[Nm/arcmin]	*12	60			
Maximum Torsional Backlash	[Arc-min]	--	≤ 4			
Noise Level	dB [A]	*13	≤ 85			
Protection Class	--	*14	IP54 (IP65)			
Ambient Temperature	[°C]	--	0-40			
Permitted Housing Temperature	[°C]	--	90			
Weight	[kg]	*15	9.5			

EVT 110 3-Stage Specifications

Frame Size	**110**					
Ratio	Unit	Note	16	20	25	28
Nominal Output Torque	[Nm]	*1	136	162	174	174
Maximum Acceleration Torque	[Nm]	*2	295	340	340	340
Maximum Torque	[Nm]	*3	295	340	340	340
Emergency Stop Torque	[Nm]	*4	550	550	550	550
Nominal Input Speed	[rpm]	*5	3100			
Maximum Input Speed	[rpm]	*6	6000			
No Load Running Torque	[Nm]	*7	1.11			
Maximum Radial Load	[N]	*8	12000			
Maximum Axial Load	[N]	*9	8800			
Maximum Tilting Moment	[Nm]	*10	990			
Moment of Inertia (≤ Ø 14)	[kgcm2]	--	2.52	2.24	2.20	2.42
Moment of Inertia (≤ Ø 19)	[kgcm2]	--	2.85	2.57	2.53	2.75
Moment of Inertia (≤ Ø 28)	[kgcm2]	--	4.98	4.69	4.66	4.88
Moment of Inertia (≤ Ø 38)	[kgcm2]	--	--	--	--	--
Efficiency	[%]	*11	88			
Torsional Rigidity	[Nm/arcmin]	*12	60			
Maximum Torsional Backlash	[Arc-min]	--	≤ 7			
Noise Level	dB [A]	*13	≤ 85			
Protection Class	--	*14	IP54 (IP65)			
Ambient Temperature	[°C]	--	0-40			
Permitted Housing Temperature	[°C]	--	90			
Weight	[kg]	*15	9			

EVT 110 3-Stage Specifications

Frame Size	110						
Ratio	Unit	Note	35	40	50	70	100
Nominal Output Torque	[Nm]	*1	174	172	174	174	132
Maximum Acceleration Torque	[Nm]	*2	340	340	340	340	240
Maximum Torque	[Nm]	*3	340	340	340	340	240
Emergency Stop Torque	[Nm]	*4	550	550	550	550	450
Nominal Input Speed	[rpm]	*5	3100				
Maximum Input Speed	[rpm]	*6	6000				
No Load Running Torque	[Nm]	*7	1.11				
Maximum Radial Load	[N]	*8	12000				
Maximum Axial Load	[N]	*9	8800				
Maximum Tilting Moment	[Nm]	*10	990				
Moment of Inertia (≤ Ø 14)	[kgcm2]	--	2.17	1.87	1.86	1.85	1.85
Moment of Inertia (≤ Ø 19)	[kgcm2]	--	2.50	2.20	2.19	2.18	2.18
Moment of Inertia (≤ Ø 28)	[kgcm2]	--	4.63	4.33	4.32	4.31	4.31
Moment of Inertia (≤ Ø 38)	[kgcm2]	--	--	--	--	--	--
Efficiency	[%]	*11	88				
Torsional Rigidity	[Nm/arcmin]	*12	60				
Maximum Torsional Backlash	[Arc-min]	--	≤ 7				
Noise Level	dB [A]	*13	≤ 85				
Protection Class	--	*14	IP54 (IP65)				
Ambient Temperature	[°C]	--	0-40				
Permitted Housing Temperature	[°C]	--	90				
Weight	[kg]	*15	9				

*1) At nominal input speed, service life is 20,000 hours

*2) The maximum torque when starting or stopping operation. Apply Cycle Factor f_0, found on page 468, for higher duty cycle applications

*3) Permitted 10,000 times during service life. Based on 10% of maximum radial load and smooth output shaft

*4) The maximum torque allowed under a stress situation. Permitted 1,000 times during service life

*5) The average input speed at nominal input torque. Maintain housing temperature below permitted value

*6) The maximum intermittent input speed

*7) Torque at no load applied to the input shaft at nominal input speed

*8) The maximum radial load that the gearbox can accept

*9) The maximum axial load that the gearbox can accept

*10) The moment is the maximum load at output flange surface

*11) The efficiency at the nominal output torque rating

*12) This does not include lost motion

*13) Contact Nidec Drive Technology for the testing conditions and environment

*14) Various wash-down options are available. Contact Nidec Drive Technology for more details

*15) Weight may vary slightly between models

EVT 110 2-Stage Dimensions

Input bore size ≤ø19mm

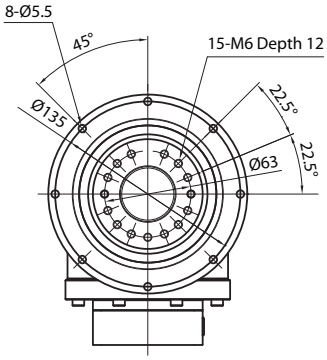

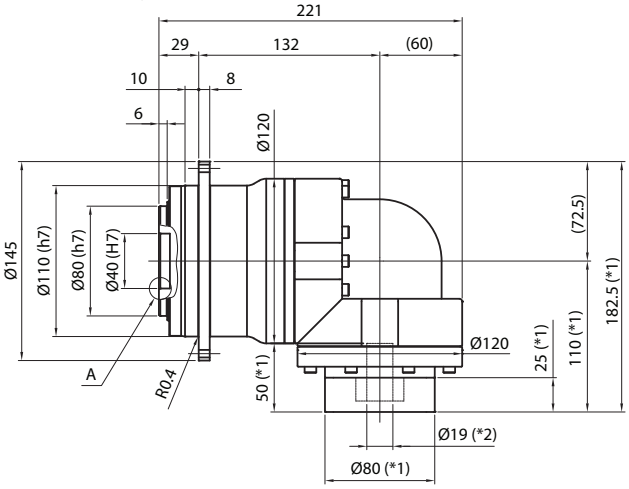

Input bore size ≤ø28mm

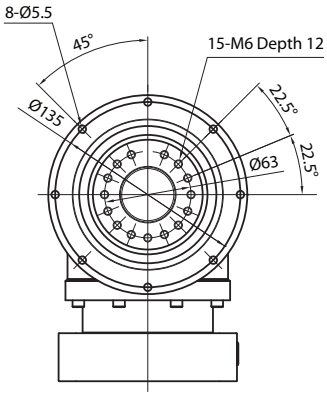

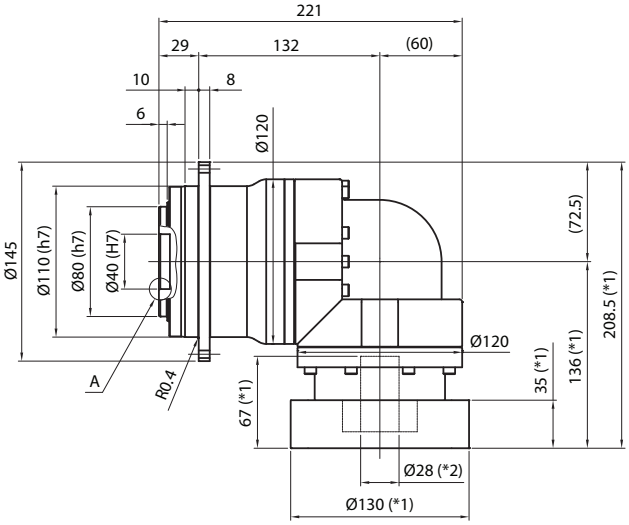

Input bore size ≤ø38mm

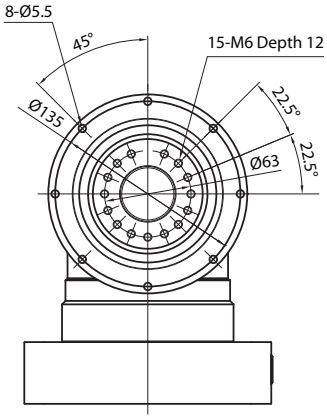

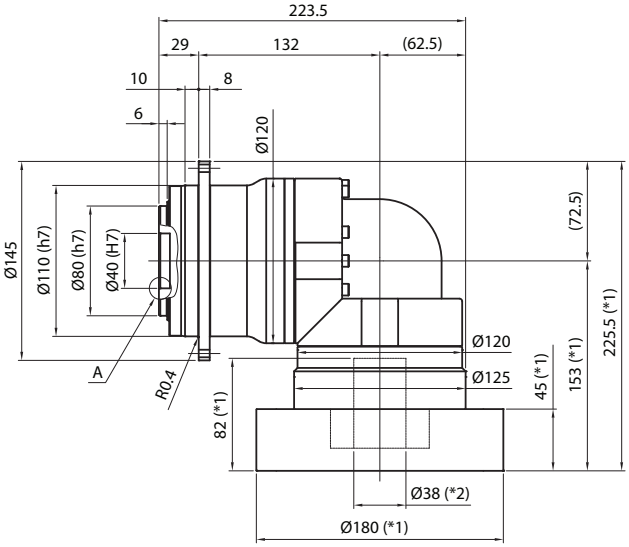

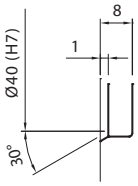

Enlarged detail A

*1) Length will vary depending on motor

*2) Bushing will be inserted to adapt to motor shaft

EVT 110 3-Stage Dimensions

Input bore size ≤ø14mm

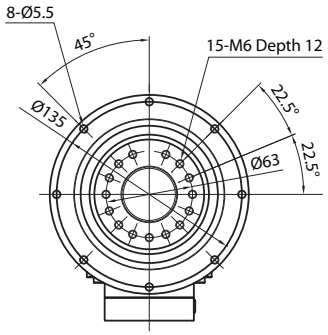

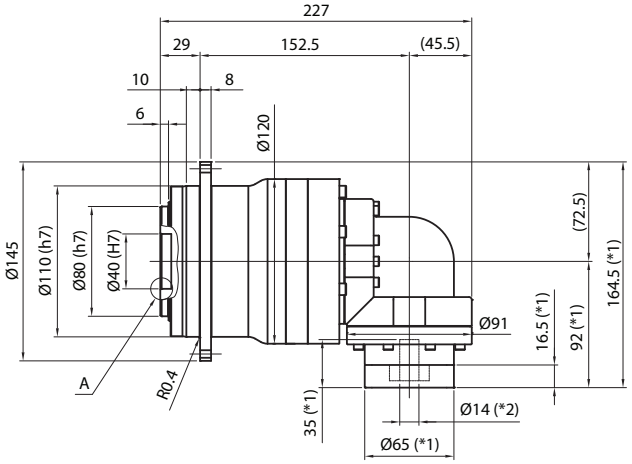

Input bore size ≤ø19mm

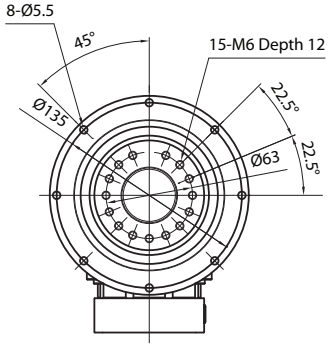

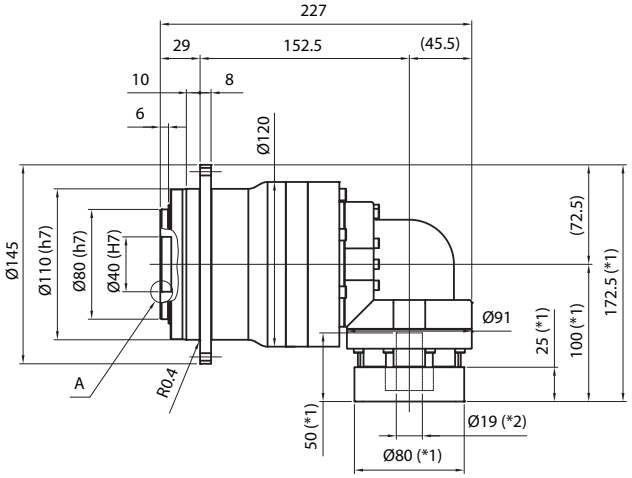

Input bore size ≤ø28mm

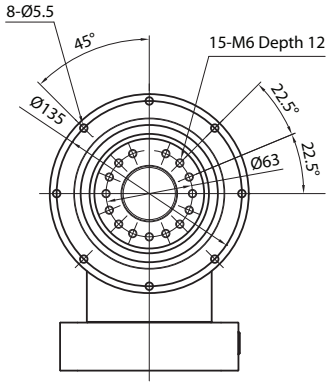

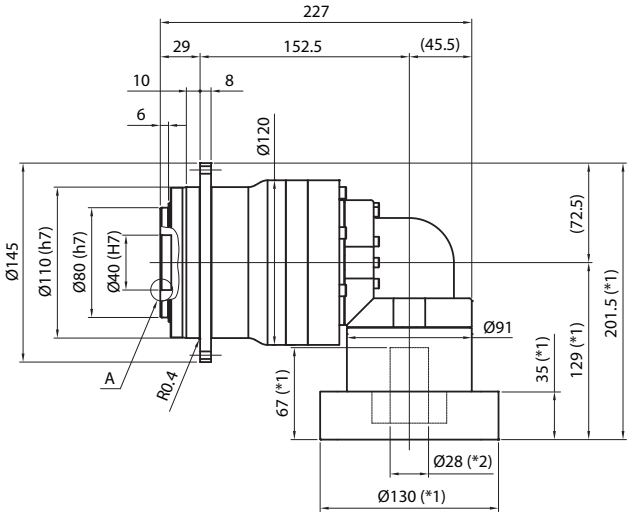

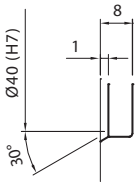

Enlarged detail A

*1) Length will vary depending on motor

*2) Bushing will be inserted to adapt to motor shaft

EVT 140 2-Stage Specifications

Frame Size	**140**					
Ratio	Unit	Note	4	5	7	10
Nominal Output Torque	[Nm]	*1	181	205	307	233
Maximum Acceleration Torque	[Nm]	*2	389	458	687	480
Maximum Torque	[Nm]	*3	452	531	766	559
Emergency Stop Torque	[Nm]	*4	950	1100	1100	750
Nominal Input Speed	[rpm]	*5	2000			
Maximum Input Speed	[rpm]	*6	5000			
No Load Running Torque	[Nm]	*7	3.26			
Maximum Radial Load	[N]	*8	19000			
Maximum Axial Load	[N]	*9	14000			
Maximum Tilting Moment	[Nm]	*10	2000			
Moment of Inertia (≤ Ø 19)	[kgcm2]	--	--	--	--	--
Moment of Inertia (≤ Ø 28)	[kgcm2]	--	22.58	19.57	17.07	15.36
Moment of Inertia (≤ Ø 38)	[kgcm2]	--	26.96	23.94	21.45	19.73
Moment of Inertia (≤ Ø 48)	[kgcm2]	--	40.19	37.17	34.68	32.96
Efficiency	[%]	*11	93			
Torsional Rigidity	[Nm/arcmin]	*12	140			
Maximum Torsional Backlash	[Arc-min]	--	≤ 4			
Noise Level	dB [A]	*13	≤ 85			
Protection Class	--	*14	IP54 (IP65)			
Ambient Temperature	[°C]	--	0-40			
Permitted Housing Temperature	[°C]	--	90			
Weight	[kg]	*15	17.4			

EVT 140 3-Stage Specifications

Frame Size	**140**					
Ratio	Unit	Note	16	20	25	28
Nominal Output Torque	[Nm]	*1	307	316	352	352
Maximum Acceleration Torque	[Nm]	*2	687	687	687	687
Maximum Torque	[Nm]	*3	687	687	687	687
Emergency Stop Torque	[Nm]	*4	1100	1100	1100	1100
Nominal Input Speed	[rpm]	*5	2300			
Maximum Input Speed	[rpm]	*6	5000			
No Load Running Torque	[Nm]	*7	2.56			
Maximum Radial Load	[N]	*8	19000			
Maximum Axial Load	[N]	*9	14000			
Maximum Tilting Moment	[Nm]	*10	2000			
Moment of Inertia (≤ Ø 19)	[kgcm2]	--	7.24	6.21	6.09	6.89
Moment of Inertia (≤ Ø 28)	[kgcm2]	--	8.83	7.80	7.69	8.48
Moment of Inertia (≤ Ø 38)	[kgcm2]	--	15.91	14.88	14.76	15.55
Moment of Inertia (≤ Ø 48)	[kgcm2]	--	--	--	--	--
Efficiency	[%]	*11	88			
Torsional Rigidity	[Nm/arcmin]	*12	140			
Maximum Torsional Backlash	[Arc-min]	--	≤ 7			
Noise Level	dB [A]	*13	≤ 85			
Protection Class	--	*14	IP54 (IP65)			
Ambient Temperature	[°C]	--	0-40			
Permitted Housing Temperature	[°C]	--	90			
Weight	[kg]	*15	17.6			

EVT 140 3-Stage Specifications

Frame Size	140						
Ratio	Unit	Note	35	40	50	70	100
Nominal Output Torque	[Nm]	*1	352	337	352	352	240
Maximum Acceleration Torque	[Nm]	*2	687	687	687	687	480
Maximum Torque	[Nm]	*3	687	687	687	687	480
Emergency Stop Torque	[Nm]	*4	1100	1100	1100	1100	750
Nominal Input Speed	[rpm]	*5	2300				
Maximum Input Speed	[rpm]	*6	5000				
No Load Running Torque	[Nm]	*7	2.56				
Maximum Radial Load	[N]	*8	19000				
Maximum Axial Load	[N]	*9	14000				
Maximum Tilting Moment	[Nm]	*10	2000				
Moment of Inertia (≤ Ø 19)	[kgcm2]	--	5.98	4.94	4.91	4.88	4.87
Moment of Inertia (≤ Ø 28)	[kgcm2]	--	7.58	6.53	6.50	6.48	6.46
Moment of Inertia (≤ Ø 38)	[kgcm2]	--	14.65	13.60	13.58	13.55	13.54
Moment of Inertia (≤ Ø 48)	[kgcm2]	--	--	--	--	--	--
Efficiency	[%]	*11	88				
Torsional Rigidity	[Nm/arcmin]	*12	140				
Maximum Torsional Backlash	[Arc-min]	--	≤ 7				
Noise Level	dB [A]	*13	≤ 85				
Protection Class	--	*14	IP54 (IP65)				
Ambient Temperature	[°C]	--	0-40				
Permitted Housing Temperature	[°C]	--	90				
Weight	[kg]	*15	17.6				

*1) At nominal input speed, service life is 20,000 hours

*2) The maximum torque when starting or stopping operation. Apply Cycle Factor f_0, found on page 468, for higher duty cycle applications

*3) Permitted 10,000 times during service life. Based on 10% of maximum radial load and smooth output shaft

*4) The maximum torque allowed under a stress situation. Permitted 1,000 times during service life

*5) The average input speed at nominal input torque. Maintain housing temperature below permitted value

*6) The maximum intermittent input speed

*7) Torque at no load applied to the input shaft at nominal input speed

*8) The maximum radial load that the gearbox can accept

*9) The maximum axial load that the gearbox can accept

*10) The moment is the maximum load at output flange surface

*11) The efficiency at the nominal output torque rating

*12) This does not include lost motion

*13) Contact Nidec Drive Technology for the testing conditions and environment

*14) Various wash-down options are available. Contact Nidec Drive Technology for more details

*15) Weight may vary slightly between models

EVT 140 2-Stage Dimensions

Input bore size ≤ø28mm

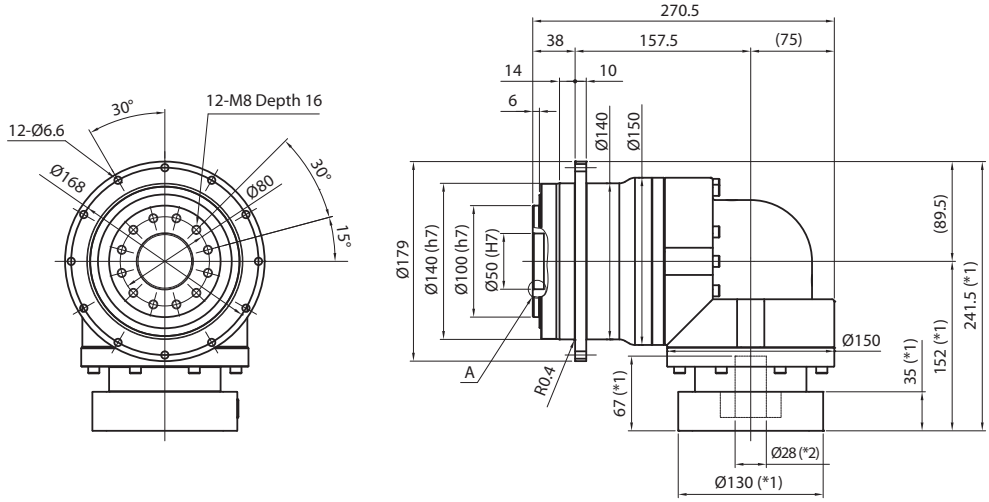

Input bore size ≤ø38mm

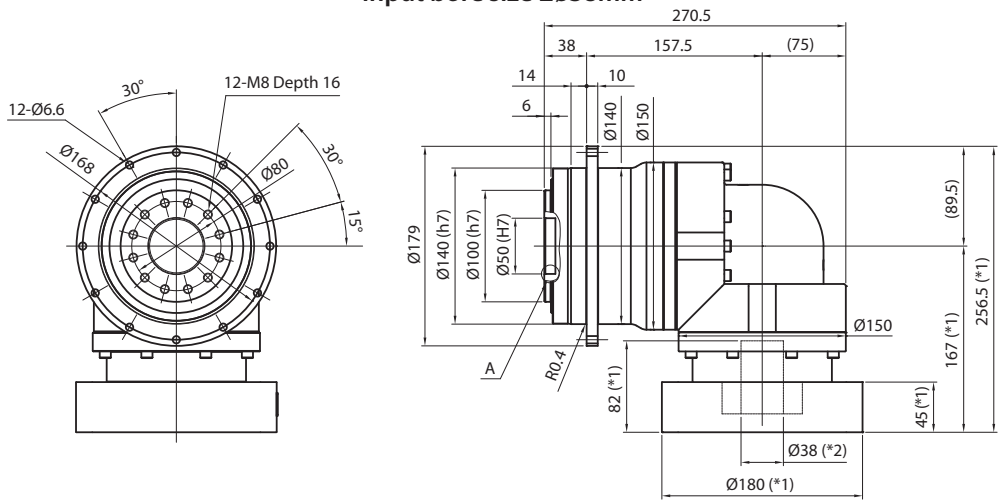

Input bore size ≤ø48mm

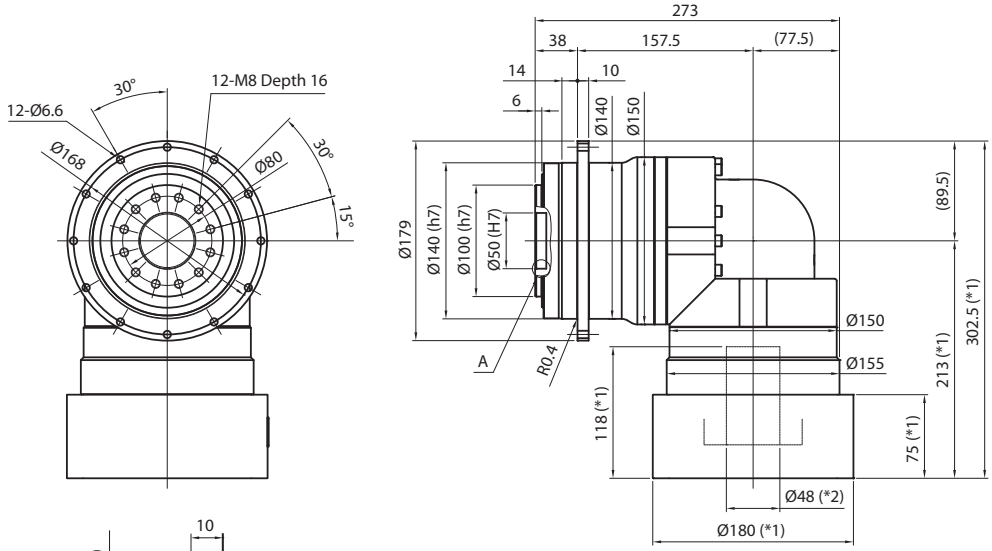

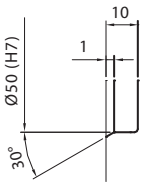

Enlarged detail A

*1) Length will vary depending on motor

*2) Bushing will be inserted to adapt to motor shaft

EVT 140 3-Stage Dimensions

Input bore size ≤ø19mm

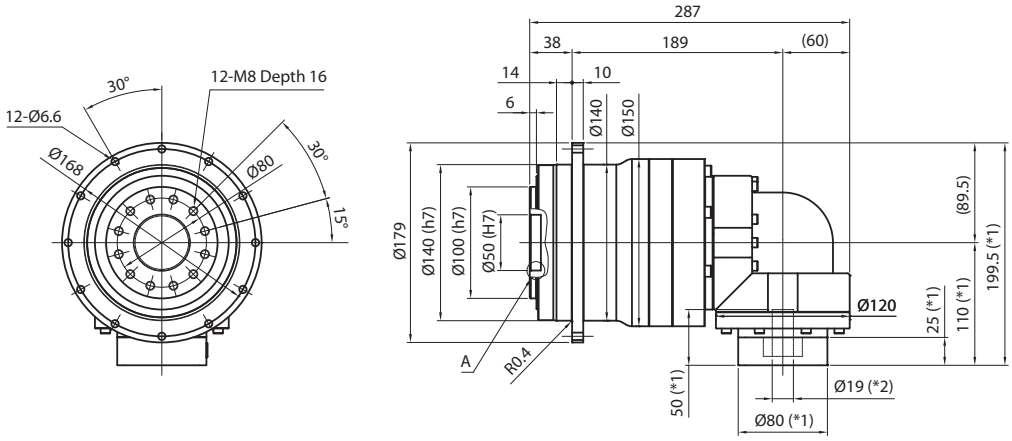

Input bore size ≤ø28mm

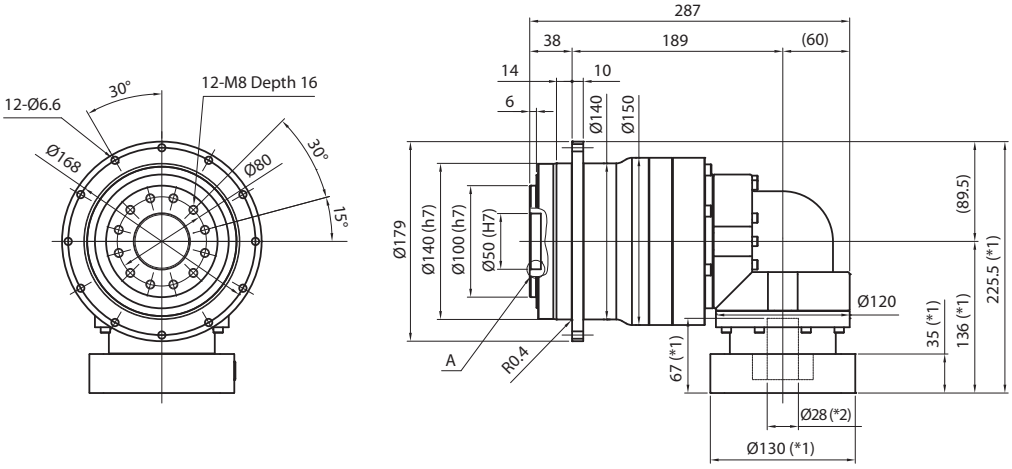

Input bore size ≤ø38mm

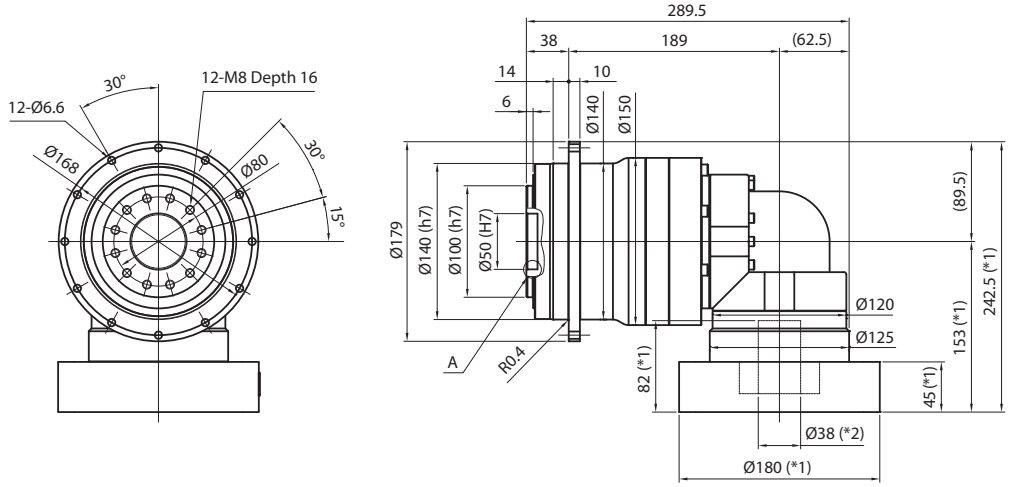

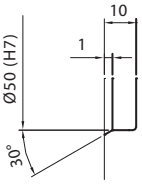

Enlarged detail A

*1) Length will vary depending on motor

*2) Bushing will be inserted to adapt to motor shaft

EVT

EVT 200 2-Stage Specifications

Frame Size	**200**					
Ratio	Unit	Note	4	5	7	10
Nominal Output Torque	[Nm]	*1	604	646	646	478
Maximum Acceleration Torque	[Nm]	*2	904	1127	1315	931
Maximum Torque	[Nm]	*3	1064	1327	1498	1144
Emergency Stop Torque	[Nm]	*4	1700	2000	2500	2000
Nominal Input Speed	[rpm]	*5	1500			
Maximum Input Speed	[rpm]	*6	4000			
No Load Running Torque	[Nm]	*7	10.8			
Maximum Radial Load	[N]	*8	40000			
Maximum Axial Load	[N]	*9	30000			
Maximum Tilting Moment	[Nm]	*10	5300			
Moment of Inertia (≤ Ø 28)	[kgcm2]	--	--	--	--	--
Moment of Inertia (≤ Ø 38)	[kgcm2]	--	93.44	81.86	71.47	66.72
Moment of Inertia (≤ Ø 48)	[kgcm2]	--	138.1	123.3	109.6	103.4
Moment of Inertia (≤ Ø 65)	[kgcm2]	--	223.7	208.9	195.2	189.0
Efficiency	[%]	*11	93			
Torsional Rigidity	[Nm/arcmin]	*12	320			
Maximum Torsional Backlash	[Arc-min]	--	≤ 6			
Noise Level	dB [A]	*13	≤ 85			
Protection Class	--	*14	IP54 (IP65)			
Ambient Temperature	[°C]	--	0-40			
Permitted Housing Temperature	[°C]	--	90			
Weight	[kg]	*15	50			

EVT 200 3-Stage Specifications

Frame Size	**200**					
Ratio	Unit	Note	16	20	25	28
Nominal Output Torque	[Nm]	*1	583	646	683	710
Maximum Acceleration Torque	[Nm]	*2	1315	1315	1315	1315
Maximum Torque	[Nm]	*3	1315	1315	1315	1315
Emergency Stop Torque	[Nm]	*4	2500	2500	2500	2500
Nominal Input Speed	[rpm]	*5	2100			
Maximum Input Speed	[rpm]	*6	4000			
No Load Running Torque	[Nm]	*7	4.7			
Maximum Radial Load	[N]	*8	40000			
Maximum Axial Load	[N]	*9	30000			
Maximum Tilting Moment	[Nm]	*10	5300			
Moment of Inertia (≤ Ø 28)	[kgcm2]	--	13.42	11.92	11.38	11.82
Moment of Inertia (≤ Ø 38)	[kgcm2]	--	22.20	20.71	20.17	20.61
Moment of Inertia (≤ Ø 48)	[kgcm2]	--	27.02	25.53	24.99	25.43
Moment of Inertia (≤ Ø 65)	[kgcm2]	--	--	--	--	--
Efficiency	[%]	*11	88			
Torsional Rigidity	[Nm/arcmin]	*12	320			
Maximum Torsional Backlash	[Arc-min]	--	≤ 9			
Noise Level	dB [A]	*13	≤ 85			
Protection Class	--	*14	IP54 (IP65)			
Ambient Temperature	[°C]	--	0-40			
Permitted Housing Temperature	[°C]	--	90			
Weight	[kg]	*15	37			

EVT 200 3-Stage Specifications

Frame Size	**200**						
Ratio	Unit	Note	35	40	50	70	100
Nominal Output Torque	[Nm]	*1	710	465	710	710	480
Maximum Acceleration Torque	[Nm]	*2	1315	1315	1315	1315	931
Maximum Torque	[Nm]	*3	1315	1315	1315	1315	931
Emergency Stop Torque	[Nm]	*4	2500	2500	2500	2500	2000
Nominal Input Speed	[rpm]	*5	2100				
Maximum Input Speed	[rpm]	*6	4000				
No Load Running Torque	[Nm]	*7	4.7				
Maximum Radial Load	[N]	*8	40000				
Maximum Axial Load	[N]	*9	30000				
Maximum Tilting Moment	[Nm]	*10	5300				
Moment of Inertia (≤ Ø 28)	[kgcm2]	--	10.9	10.5	10.3	10.2	10.2
Moment of Inertia (≤ Ø 38)	[kgcm2]	--	19.69	19.26	19.13	19.01	18.94
Moment of Inertia (≤ Ø 48)	[kgcm2]	--	24.51	24.08	23.95	23.83	23.77
Moment of Inertia (≤ Ø 65)	[kgcm2]	--	--	--	--	--	--
Efficiency	[%]	*11	88				
Torsional Rigidity	[Nm/arcmin]	*12	320				
Maximum Torsional Backlash	[Arc-min]	--	≤ 9				
Noise Level	dB [A]	*13	≤ 85				
Protection Class	--	*14	IP54 (IP65)				
Ambient Temperature	[°C]	--	0-40				
Permitted Housing Temperature	[°C]	--	90				
Weight	[kg]	*15	37				

*1) At nominal input speed, service life is 20,000 hours

*2) The maximum torque when starting or stopping operation. Apply Cycle Factor f_0, found on page 468, for higher duty cycle applications

*3) Permitted 10,000 times during service life. Based on 10% of maximum radial load and smooth output shaft

*4) The maximum torque allowed under a stress situation. Permitted 1,000 times during service life

*5) The average input speed at nominal input torque. Maintain housing temperature below permitted value

*6) The maximum intermittent input speed

*7) Torque at no load applied to the input shaft at nominal input speed

*8) The maximum radial load that the gearbox can accept

*9) The maximum axial load that the gearbox can accept

*10) The moment is the maximum load at output flange surface

*11) The efficiency at the nominal output torque rating

*12) This does not include lost motion

*13) Contact Nidec Drive Technology for the testing conditions and environment

*14) Various wash-down options are available. Contact Nidec Drive Technology for more details

*15) Weight may vary slightly between models

EVT 200 2-Stage Dimensions

Input bore size ≤ø38mm

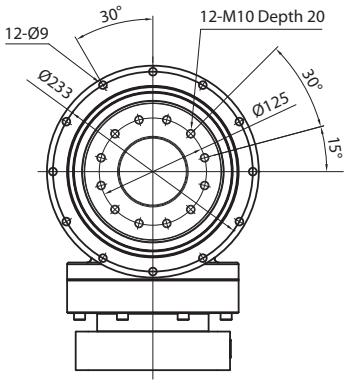

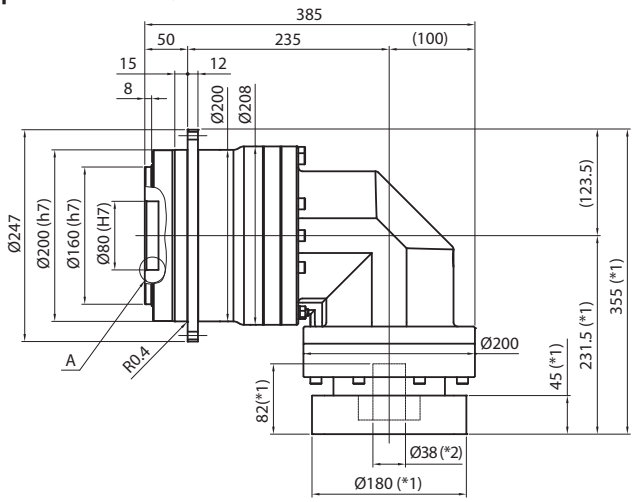

Input bore size ≤ø48mm

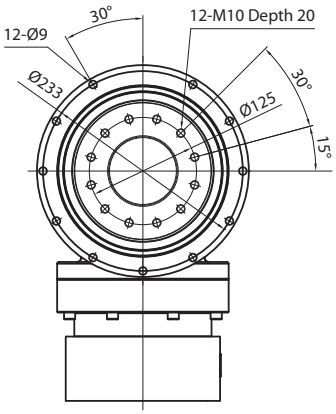

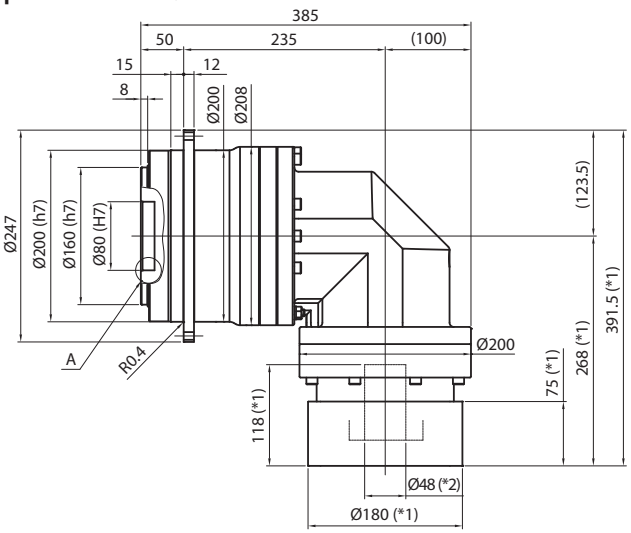

Input bore size ≤ø65mm

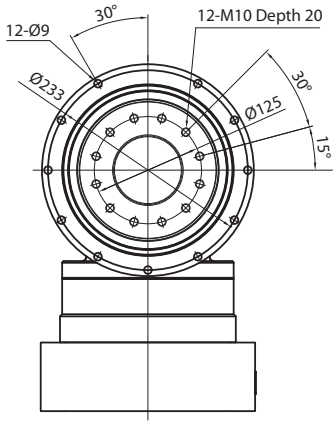

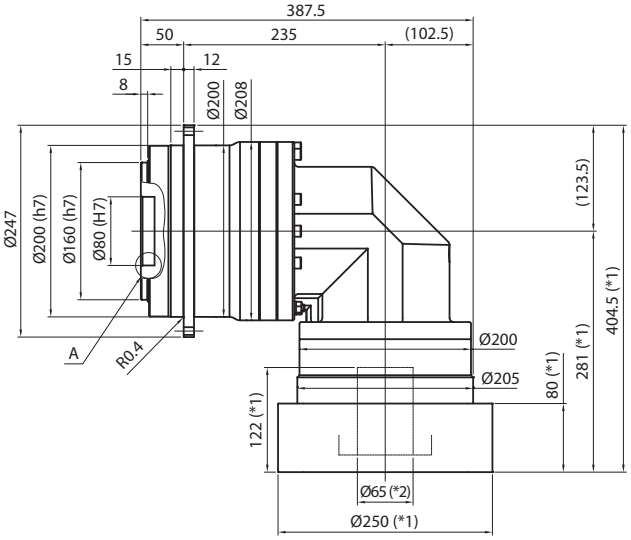

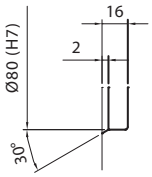

Enlarged detail A

*1) Length will vary depending on motor

*2) Bushing will be inserted to adapt to motor shaft

EVT 200 3-Stage Dimensions

Input bore size ≤ø28mm

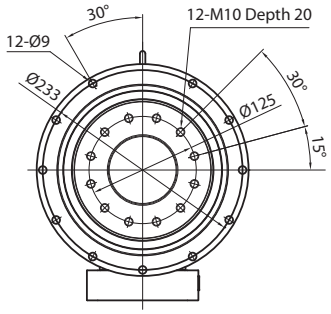

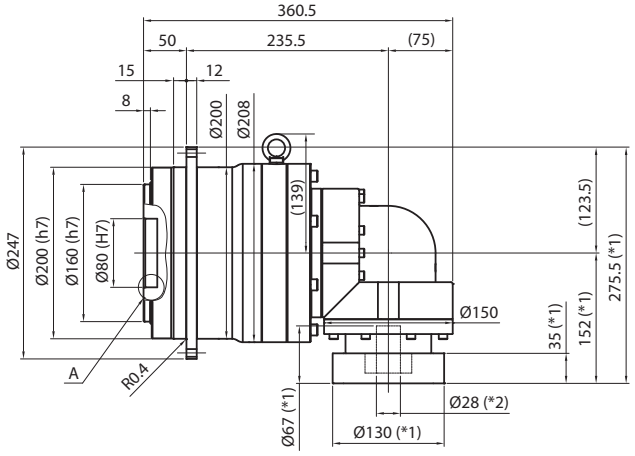

Input bore size ≤ø38mm

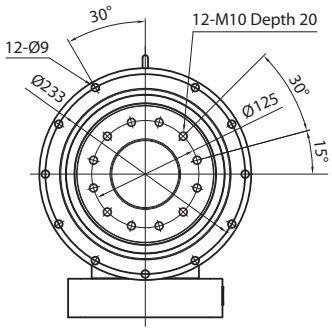

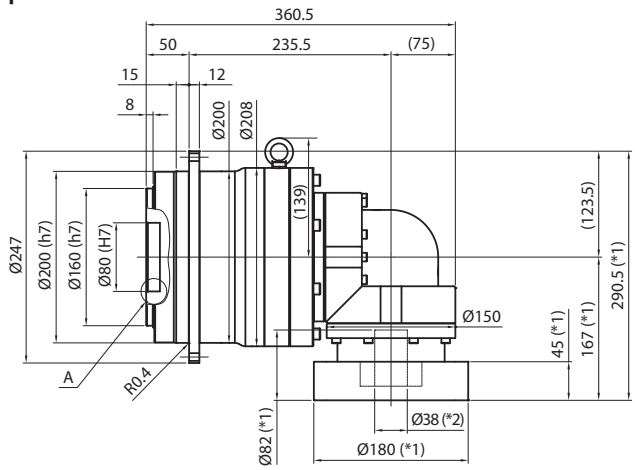

Input bore size ≤ø48mm

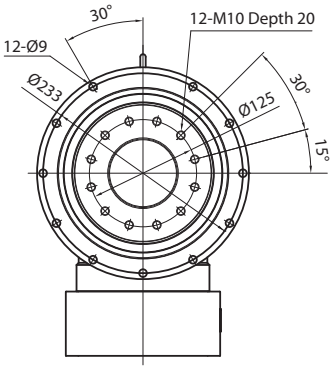

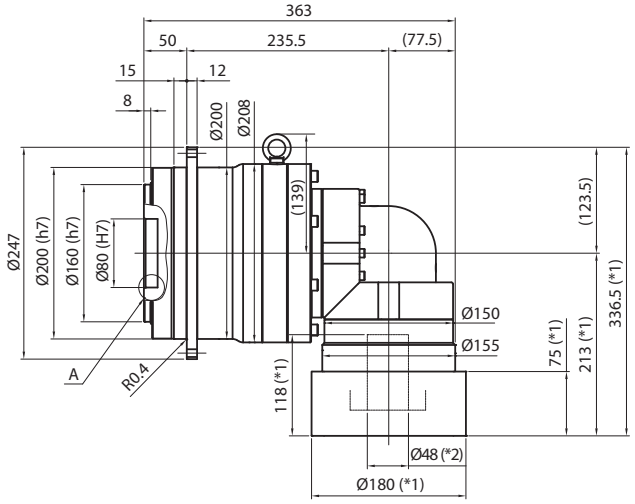

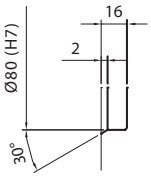

Enlarged detail A

*1) Length will vary depending on motor

*2) Bushing will be inserted to adapt to motor shaft

EVT

EVT 255 2-Stage Specifications

Frame Size	**255**					
Ratio	Unit	Note	4	5	7	10
Nominal Output Torque	[Nm]	*1	1340	1680	2024	1534
Maximum Acceleration Torque	[Nm]	*2	3520	3520	3428	2478
Maximum Torque	[Nm]	*3	3891	3891	3809	2781
Emergency Stop Torque	[Nm]	*4	5400	6500	7200	5400
Nominal Input Speed	[rpm]	*5	1200			
Maximum Input Speed	[rpm]	*6	3000			
No Load Running Torque	[Nm]	*7	--			
Maximum Radial Load	[N]	*8	64000			
Maximum Axial Load	[N]	*9	48000			
Maximum Tilting Moment	[Nm]	*10	11000			
Moment of Inertia (≤ Ø 48)	[kgcm2]	--	--	--	--	--
Moment of Inertia (≤ Ø 65)	[kgcm2]	--	661.8	619.8	587.7	572.0
Efficiency	[%]	*11	93			
Torsional Rigidity	[Nm/arcmin]	*12	840			
Maximum Torsional Backlash	[Arc-min]	--	≤ 6			
Noise Level	dB [A]	*13	≤ 85			
Protection Class	--	*14	IP54 (IP65)			
Ambient Temperature	[°C]	--	0-40			
Permitted Housing Temperature	[°C]	--	90			
Weight	[kg]	*15	110			

EVT 255 3-Stage Specifications

Frame Size	**255**					
Ratio	Unit	Note	16	20	25	28
Nominal Output Torque	[Nm]	*1	1920	1992	2154	2195
Maximum Acceleration Torque	[Nm]	*2	3520	3520	3520	3460
Maximum Torque	[Nm]	*3	3520	3520	3520	3460
Emergency Stop Torque	[Nm]	*4	7200	7200	7200	7200
Nominal Input Speed	[rpm]	*5	1500			
Maximum Input Speed	[rpm]	*6	3000			
No Load Running Torque	[Nm]	*7	--			
Maximum Radial Load	[N]	*8	64000			
Maximum Axial Load	[N]	*9	48000			
Maximum Tilting Moment	[Nm]	*10	11000			
Moment of Inertia (≤ Ø 48)	[kgcm2]	--	118.52	114.63	113.37	114.80
Moment of Inertia (≤ Ø 65)	[kgcm2]	--	--	--	--	--
Efficiency	[%]	*11	88			
Torsional Rigidity	[Nm/arcmin]	*12	840			
Maximum Torsional Backlash	[Arc-min]	--	≤ 9			
Noise Level	dB [A]	*13	≤ 85			
Protection Class	--	*14	IP54 (IP65)			
Ambient Temperature	[°C]	--	0-40			
Permitted Housing Temperature	[°C]	--	90			
Weight	[kg]	*15	99			

EVT 255 3-Stage Specifications

Frame Size	**255**						
Ratio	Unit	Note	35	40	50	70	100
Nominal Output Torque	[Nm]	*1	2195	2195	2195	2195	1405
Maximum Acceleration Torque	[Nm]	*2	3460	3520	3520	3460	1718
Maximum Torque	[Nm]	*3	3460	3520	3520	3460	1718
Emergency Stop Torque	[Nm]	*4	7200	7200	7200	7200	5400
Nominal Input Speed	[rpm]	*5	1500				
Maximum Input Speed	[rpm]	*6	3000				
No Load Running Torque	[Nm]	*7	--				
Maximum Radial Load	[N]	*8	64000				
Maximum Axial Load	[N]	*9	48000				
Maximum Tilting Moment	[Nm]	*10	11000				
Moment of Inertia (≤ Ø 48)	[kgcm2]	--	112.25	109.37	109.05	108.77	108.62
Moment of Inertia (≤ Ø 65)	[kgcm2]	--	--	--	--	--	--
Efficiency	[%]	*11	88				
Torsional Rigidity	[Nm/arcmin]	*12	840				
Maximum Torsional Backlash	[Arc-min]	--	≤ 9				
Noise Level	dB [A]	*13	≤ 85				
Protection Class	--	*14	IP54 (IP65)				
Ambient Temperature	[°C]	--	0-40				
Permitted Housing Temperature	[°C]	--	90				
Weight	[kg]	*15	99				

*1) At nominal input speed, service life is 20,000 hours

*2) The maximum torque when starting or stopping operation. Apply Cycle Factor $\mathbf{f_0}$, found on page 468, for higher duty cycle applications

*3) Permitted 10,000 times during service life. Based on 10% of maximum radial load and smooth output shaft

*4) The maximum torque allowed under a stress situation. Permitted 1,000 times during service life

*5) The average input speed at nominal input torque. Maintain housing temperature below permitted value

*6) The maximum intermittent input speed

*7) Torque at no load applied to the input shaft at nominal input speed

*8) The maximum radial load that the gearbox can accept

*9) The maximum axial load that the gearbox can accept

*10) The moment is the maximum load at output flange surface

*11) The efficiency at the nominal output torque rating

*12) This does not include lost motion

*13) Contact Nidec Drive Technology for the testing conditions and environment

*14) Various wash-down options are available. Contact Nidec Drive Technology for more details

*15) Weight may vary slightly between models

EVT 255 2-Stage Dimensions

Input bore size ≤ø65mm

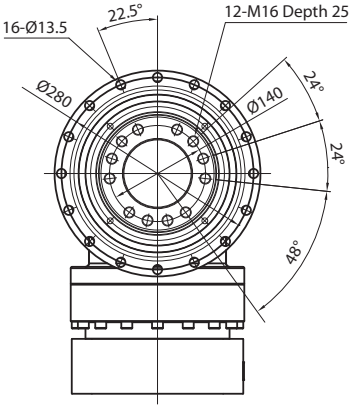

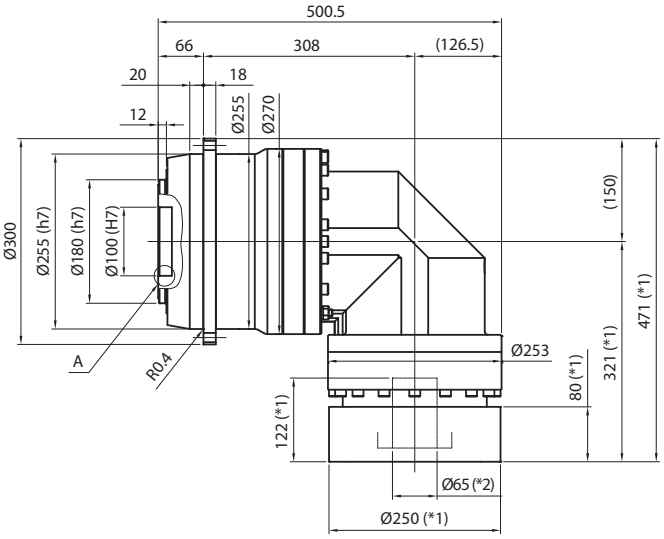

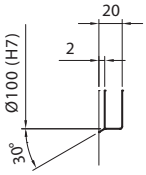

Enlarged detail A

*1) Length will vary depending on motor

*2) Bushing will be inserted to adapt to motor shaft

EVT 255 3-Stage Dimensions

Input bore size ≤ø48mm

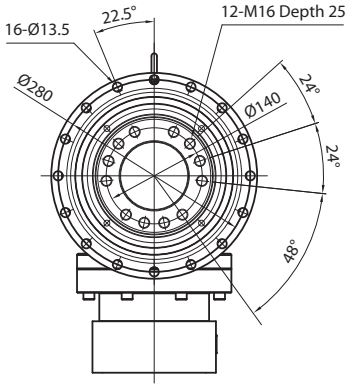

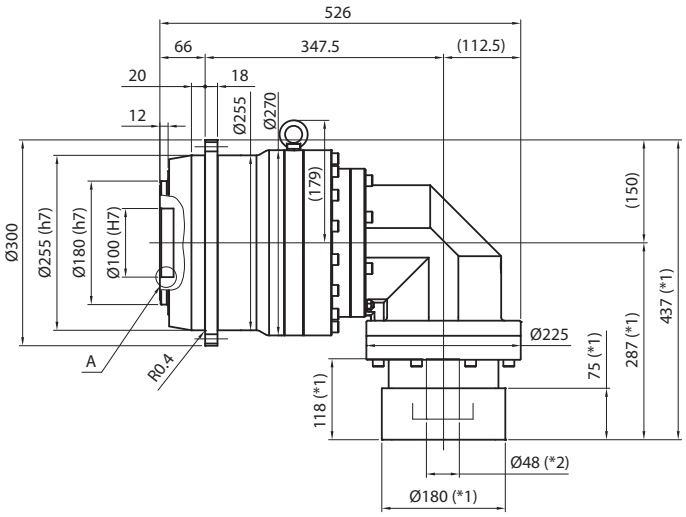

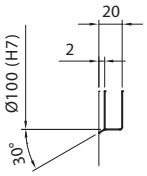

Enlarged detail A

*1) Length will vary depending on motor

*2) Bushing will be inserted to adapt to motor shaft

EVT

EJM SERIES

An excellent choice for customers looking for a highly flexible, yet value-priced servo rated gearbox without sacrificing performance or durability. The EJM series comes in six different frame sizes to meet a wide range of application requirements and can support servo motors with up to 7.5kW capacity. Solid, hollow and double extended output shaft options allow for flexible machine design. The all-aluminum housing construction offers weight savings of up to 30% with improved thermal horsepower over cast iron.

The EJM series comes vent free and lubricated for life with synthetic oil, making it a reliable, maintenance-free solution. This product is ideally suited for applications within the packaging, material handling and general automation markets.

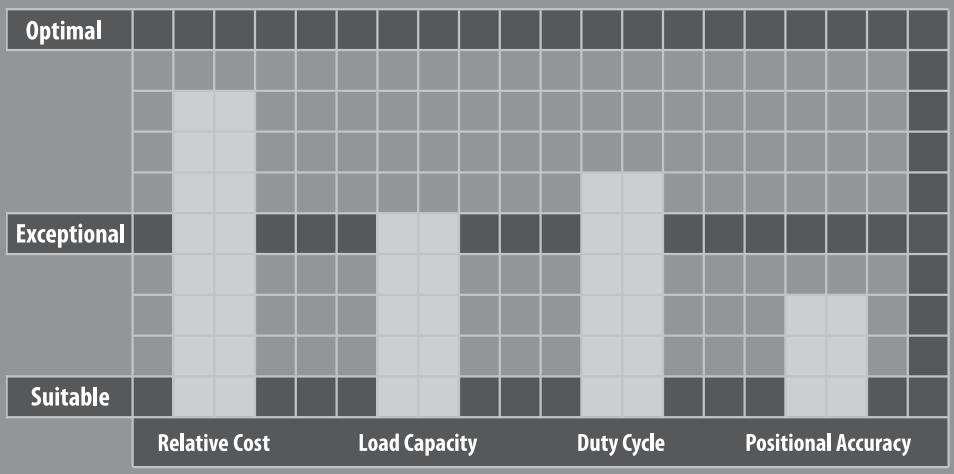

EJM SERIES

- Value engineered solution for less demanding servo applications
- Lightweight aluminum housing offers weight savings combined with improved thermal horsepower over cast iron
- Maintenance free solution; vent free and lubricated for life with synthetic oil
- Rated torque up to 614 Nm (up to 7.5 kw servo motor capacity)

EJM Series Features

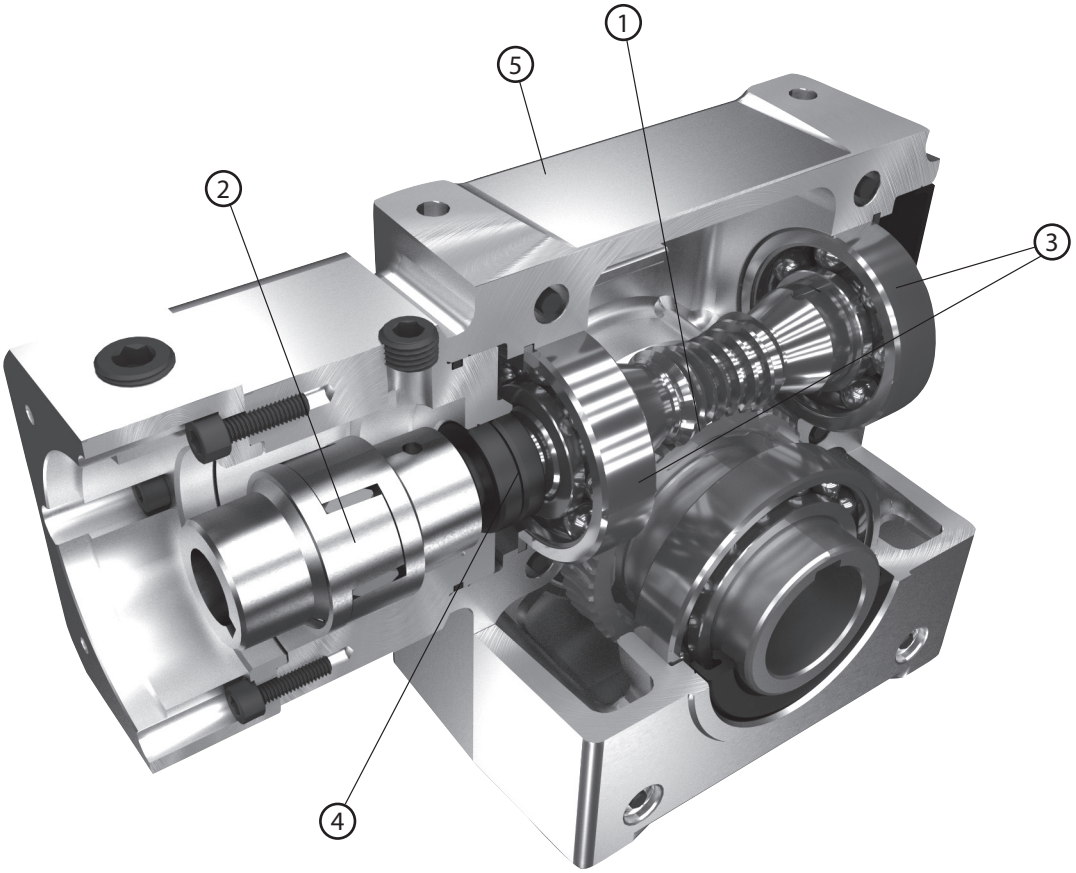

1. Globoidal gear set – between 3-8 teeth in contact at once, allowing 300% shock load capacity
2. Integrated zero backlash coupling provides fast, error free alignment
3. Ball bearings help reduce friction and heat, as compared to tapered roller designs
4. Double oil seal and o-ring provide IP65 protection
5. Thermally efficient, lightweight aluminum housing

EJM Series Model Code

EJM	–	030	–	25	–	H0	0	–	MGKJ24

- MGKJ24: *Motor mounting code
- 0: Backlash: 0: Standard Backlash
- H0: Output mounting type:
  - H0: Keyed Hollow Shaft
  - SR: Keyed Solid Shaft Right
  - SL: Keyed Solid Shaft Left
  - SW: Keyed Dual Solid Shaft
- 25: Ratio: 5, 7.5, 10, 15, 20, 25, 30, 40, 50, 60
- 030: Frame size: 002, 003, 005, 006, 009, 011
- EJM: Series

* Motor mounting code varies depending on the motor. Contact us to configure the code.

EJM 002 1-Stage Specifications

Frame Size	**002**						
Ratio	Unit	Note	5	7.5	10	15	20
Nominal Output Torque	[Nm]	--	29	32	33	35	35
Maximum Acceleration Torque	[Nm]	--	38	40	33	42	43
Emergency Stop Torque	[Nm]	--	58	64	66	70	70
No Load Running Torque	[Nm]	*1	0.51				
Nominal Input Speed	[rpm]	--	2,000				
Maximum Continuous Input Speed	[rpm]	--	3,000				
Maximum Cyclic Input Speed	[rpm]	--	4,000				
Maximum Radial Load	[N]	*2	1,780				
Maximum Axial Load	[N]	*3	1,330				
Moment of Inertia	[kgcm2]	--	0.36	0.33	0.32	0.31	0.31
Efficiency	[%]	*4	87	86	82	77	72
Torsional Rigidity	[Nm/arcmin]	--	1.0				
Maximum Torsional Backlash	[Arc-min]	--	≤ 41				
Noise Level	dB [A]	*5	≤ 73				
Ambient Temperature	[°C]	--	-25 ~ 93				
Permitted Housing Temperature	[°C]	--	100				
Protection Class	--	--	IP55				
Lubrication	--	--	Synthetic Oil				
Service Life	[Hours]	--	25,000				
Weight	[kg]	*6	3.2				

*1) Torque at no load applied to the input shaft at 2,000 rpm

*2) The maximum radial load the gearbox can accept

*3) The maximum axial load the gearbox can accept

*4) The efficiency at the nominal output torque rating

*5) Measured with no load applied to the input shaft at 2,000 rpm

*6) Weight may vary slightly between models

EJM 002 1-Stage Specifications

Frame Size	**002**						
Ratio	Unit	Note	25	30	40	50	60
Nominal Output Torque	[Nm]	--	39	36	33	32	30
Maximum Acceleration Torque	[Nm]	--	48	45	39	38	36
Emergency Stop Torque	[Nm]	--	78	72	66	64	60
No Load Running Torque	[Nm]	*1	0.51				
Nominal Input Speed	[rpm]	--	2,000				
Maximum Continuous Input Speed	[rpm]	--	3,000				
Maximum Cyclic Input Speed	[rpm]	--	4,000				
Maximum Radial Load	[N]	*2	1,780				
Maximum Axial Load	[N]	*3	1,330				
Moment of Inertia	[kgcm2]	--	0.30	0.30	0.30	0.30	0.30
Efficiency	[%]	*4	68	65	56	50	44
Torsional Rigidity	[Nm/arcmin]	--	1.0				
Maximum Torsional Backlash	[Arc-min]	--	≤ 41				
Noise Level	dB [A]	*5	≤ 73				
Ambient Temperature	[°C]	--	-25 ~ 93				
Permitted Housing Temperature	[°C]	--	100				
Protection Class	--	--	IP55				
Lubrication	--	--	Synthetic Oil				
Service Life	[Hours]	--	25,000				
Weight	[kg]	*6	3.2				

*1) Torque at no load applied to the input shaft at 2,000 rpm

*2) The maximum radial load the gearbox can accept

*3) The maximum axial load the gearbox can accept

*4) The efficiency at the nominal output torque rating

*5) Measured with no load applied to the input shaft at 2,000 rpm

*6) Weight may vary slightly between models

EJM 003 1-Stage Specifications

Frame Size	**003**						
Ratio	Unit	Note	5	7.5	10	15	20
Nominal Output Torque	[Nm]	--	43	47	48	52	52
Maximum Acceleration Torque	[Nm]	--	56	59	51	61	63
Emergency Stop Torque	[Nm]	--	86	94	96	104	104
No Load Running Torque	[Nm]	*1	0.51				
Nominal Input Speed	[rpm]	--	2,000				
Maximum Continuous Input Speed	[rpm]	--	3,000				
Maximum Cyclic Input Speed	[rpm]	--	4,000				
Maximum Radial Load	[N]	*2	2,110				
Maximum Axial Load	[N]	*3	1,770				
Moment of Inertia	[kgcm2]	--	0.75	0.64	0.61	0.58	0.57
Efficiency	[%]	*4	88	86	84	80	75
Torsional Rigidity	[Nm/arcmin]	--	1.9				
Maximum Torsional Backlash	[Arc-min]	--	≤ 30				
Noise Level	dB [A]	*5	≤ 75				
Ambient Temperature	[°C]	--	-25 ~ 93				
Permitted Housing Temperature	[°C]	--	100				
Protection Class	--	--	IP55				
Lubrication	--	--	Synthetic Oil				
Service Life	[Hours]	--	25,000				
Weight	[kg]	*6	5.4				

*1) Torque at no load applied to the input shaft at 2,000 rpm

*2) The maximum radial load the gearbox can accept

*3) The maximum axial load the gearbox can accept

*4) The efficiency at the nominal output torque rating

*5) Measured with no load applied to the input shaft at 2,000 rpm

*6) Weight may vary slightly between models

EJM 003 1-Stage Specifications

Frame Size	**003**						
Ratio	Unit	Note	25	30	40	50	60
Nominal Output Torque	[Nm]	--	55	54	48	47	44
Maximum Acceleration Torque	[Nm]	--	67	65	58	57	53
Emergency Stop Torque	[Nm]	--	110	108	96	94	88
No Load Running Torque	[Nm]	*1	0.51				
Nominal Input Speed	[rpm]	--	2,000				
Maximum Continuous Input Speed	[rpm]	--	3,000				
Maximum Cyclic Input Speed	[rpm]	--	4,000				
Maximum Radial Load	[N]	*2	2,110				
Maximum Axial Load	[N]	*3	1,770				
Moment of Inertia	[kgcm2]	--	0.57	0.56	0.56	0.56	0.56
Efficiency	[%]	*4	71	68	60	54	48
Torsional Rigidity	[Nm/arcmin]	--	1.9				
Maximum Torsional Backlash	[Arc-min]	--	≤ 30				
Noise Level	dB [A]	*5	≤ 75				
Ambient Temperature	[°C]	--	-25 ~ 93				
Permitted Housing Temperature	[°C]	--	100				
Protection Class	--	--	IP55				
Lubrication	--	--	Synthetic Oil				
Service Life	[Hours]	--	25,000				
Weight	[kg]	*6	5.4				

*1) Torque at no load applied to the input shaft at 2,000 rpm

*2) The maximum radial load the gearbox can accept

*3) The maximum axial load the gearbox can accept

*4) The efficiency at the nominal output torque rating

*5) Measured with no load applied to the input shaft at 2,000 rpm

*6) Weight may vary slightly between models

EJM 005 1-Stage Specifications

Frame Size	**005**						
Ratio	Unit	Note	5	7.5	10	15	20
Nominal Output Torque	[Nm]	--	81	88	90	100	101
Maximum Acceleration Torque	[Nm]	--	105	112	100	120	123
Emergency Stop Torque	[Nm]	--	162	176	180	200	202
No Load Running Torque	[Nm]	*1	1.61				
Nominal Input Speed	[rpm]	--	2,000				
Maximum Continuous Input Speed	[rpm]	--	3,000				
Maximum Cyclic Input Speed	[rpm]	--	4,000				
Maximum Radial Load	[N]	*2	4,330				
Maximum Axial Load	[N]	*3	3,110				
Moment of Inertia	[kgcm2]	--	1.83	1.55	1.45	1.39	1.36
Efficiency	[%]	*4	91	89	87	84	80
Torsional Rigidity	[Nm/arcmin]	--	3.1				
Maximum Torsional Backlash	[Arc-min]	--	≤ 23				
Noise Level	dB [A]	*5	≤ 80				
Ambient Temperature	[°C]	--	-25 ~ 93				
Permitted Housing Temperature	[°C]	--	100				
Protection Class	--	--	IP55				
Lubrication	--	--	Synthetic Oil				
Service Life	[Hours]	--	25,000				
Weight	[kg]	*6	7.3				

*1) Torque at no load applied to the input shaft at 2,000 rpm

*2) The maximum radial load the gearbox can accept

*3) The maximum axial load the gearbox can accept

*4) The efficiency at the nominal output torque rating

*5) Measured with no load applied to the input shaft at 2,000 rpm

*6) Weight may vary slightly between models

EJM 005 1-Stage Specifications

Frame Size	**005**						
Ratio	Unit	Note	25	30	40	50	60
Nominal Output Torque	[Nm]	--	109	105	94	91	85
Maximum Acceleration Torque	[Nm]	--	132	127	114	109	102
Emergency Stop Torque	[Nm]	--	218	210	188	182	170
No Load Running Torque	[Nm]	*1	1.61				
Nominal Input Speed	[rpm]	--	2,000				
Maximum Continuous Input Speed	[rpm]	--	3,000				
Maximum Cyclic Input Speed	[rpm]	--	4,000				
Maximum Radial Load	[N]	*2	4,330				
Maximum Axial Load	[N]	*3	3,110				
Moment of Inertia	[kgcm2]	--	1.35	1.34	1.34	1.33	1.33
Efficiency	[%]	*4	77	74	67	62	56
Torsional Rigidity	[Nm/arcmin]	--	3.1				
Maximum Torsional Backlash	[Arc-min]	--	≤ 23				
Noise Level	dB [A]	*5	≤ 80				
Ambient Temperature	[°C]	--	-25 ~ 93				
Permitted Housing Temperature	[°C]	--	100				
Protection Class	--	--	IP55				
Lubrication	--	--	Synthetic Oil				
Service Life	[Hours]	--	25,000				
Weight	[kg]	*6	7.3				

*1) Torque at no load applied to the input shaft at 2,000 rpm

*2) The maximum radial load the gearbox can accept

*3) The maximum axial load the gearbox can accept

*4) The efficiency at the nominal output torque rating

*5) Measured with no load applied to the input shaft at 2,000 rpm

*6) Weight may vary slightly between models

EJM 006 1-Stage Specifications

Frame Size	**006**						
Ratio	Unit	Note	5	7.5	10	15	20
Nominal Output Torque	[Nm]	--	133	144	145	165	168
Maximum Acceleration Torque	[Nm]	--	172	183	154	186	207
Emergency Stop Torque	[Nm]	--	266	288	290	330	336
No Load Running Torque	[Nm]	*1	2.72				
Nominal Input Speed	[rpm]	--	2,000				
Maximum Continuous Input Speed	[rpm]	--	3,000				
Maximum Cyclic Input Speed	[rpm]	--	4,000				
Maximum Radial Load	[N]	*2	4,890				
Maximum Axial Load	[N]	*3	3,550				
Moment of Inertia	[kgcm2]	--	2.61	2.02	1.81	1.66	1.61
Efficiency	[%]	*4	92	91	89	87	83
Torsional Rigidity	[Nm/arcmin]	--	5.6				
Maximum Torsional Backlash	[Arc-min]	--	≤ 20				
Noise Level	dB [A]	*5	≤ 80				
Ambient Temperature	[°C]	--	-25 ~ 93				
Permitted Housing Temperature	[°C]	--	100				
Protection Class	--	--	IP55				
Lubrication	--	--	Synthetic Oil				
Service Life	[Hours]	--	25,000				
Weight	[kg]	*6	10				

*1) Torque at no load applied to the input shaft at 2,000 rpm

*2) The maximum radial load the gearbox can accept

*3) The maximum axial load the gearbox can accept

*4) The efficiency at the nominal output torque rating

*5) Measured with no load applied to the input shaft at 2,000 rpm

*6) Weight may vary slightly between models

EJM 006 1-Stage Specifications

Frame Size	**006**						
Ratio	Unit	Note	25	30	40	50	60
Nominal Output Torque	[Nm]	--	183	175	158	150	142
Maximum Acceleration Torque	[Nm]	--	223	212	191	181	170
Emergency Stop Torque	[Nm]	--	366	350	316	300	284
No Load Running Torque	[Nm]	*1	2.72				
Nominal Input Speed	[rpm]	--	2,000				
Maximum Continuous Input Speed	[rpm]	--	3,000				
Maximum Cyclic Input Speed	[rpm]	--	4,000				
Maximum Radial Load	[N]	*2	4,890				
Maximum Axial Load	[N]	*3	3,550				
Moment of Inertia	[kgcm2]	--	1.58	1.57	1.56	1.55	1.55
Efficiency	[%]	*4	80	78	72	66	62
Torsional Rigidity	[Nm/arcmin]	--	5.6				
Maximum Torsional Backlash	[Arc-min]	--	≤ 20				
Noise Level	dB [A]	*5	≤ 80				
Ambient Temperature	[°C]	--	-25 ~ 93				
Permitted Housing Temperature	[°C]	--	100				
Protection Class	--	--	IP55				
Lubrication	--	--	Synthetic Oil				
Service Life	[Hours]	--	25,000				
Weight	[kg]	*6	10				

*1) Torque at no load applied to the input shaft at 2,000 rpm

*2) The maximum radial load the gearbox can accept

*3) The maximum axial load the gearbox can accept

*4) The efficiency at the nominal output torque rating

*5) Measured with no load applied to the input shaft at 2,000 rpm

*6) Weight may vary slightly between models

EJM 009 1-Stage Specifications

Frame Size	**009**						
Ratio	Unit	Note	5	7.5	10	15	20
Nominal Output Torque	[Nm]	--	245	262	259	305	314
Maximum Acceleration Torque	[Nm]	--	317	333	259	312	386
Emergency Stop Torque	[Nm]	--	490	524	518	610	628
No Load Running Torque	[Nm]	*1	4.80				
Nominal Input Speed	[rpm]	--	2,000				
Maximum Continuous Input Speed	[rpm]	--	2,000				
Maximum Cyclic Input Speed	[rpm]	--	3,000				
Maximum Radial Load	[N]	*2	6,890				
Maximum Axial Load	[N]	*3	4,890				
Moment of Inertia	[kgcm2]	--	12.4	10.5	9.87	9.40	9.24
Efficiency	[%]	*4	93	92	91	89	86
Torsional Rigidity	[Nm/arcmin]	--	15.5				
Maximum Torsional Backlash	[Arc-min]	--	≤ 15				
Noise Level	dB [A]	*5	≤ 83				
Ambient Temperature	[°C]	--	-25 ~ 93				
Permitted Housing Temperature	[°C]	--	100				
Protection Class	--	--	IP55				
Lubrication	--	--	Synthetic Oil				
Service Life	[Hours]	--	25,000				
Weight	[kg]	*6	20				

*1) Torque at no load applied to the input shaft at 2,000 rpm

*2) The maximum radial load the gearbox can accept

*3) The maximum axial load the gearbox can accept

*4) The efficiency at the nominal output torque rating

*5) Measured with no load applied to the input shaft at 2,000 rpm

*6) Weight may vary slightly between models

EJM 009 1-Stage Specifications

Frame Size	009						
Ratio	Unit	Note	25	30	40	50	60
Nominal Output Torque	[Nm]	--	308	327	295	278	264
Maximum Acceleration Torque	[Nm]	--	376	369	356	335	317
Emergency Stop Torque	[Nm]	--	616	654	590	556	528
No Load Running Torque	[Nm]	*1	4.80				
Nominal Input Speed	[rpm]	--	2,000				
Maximum Continuous Input Speed	[rpm]	--	2,000				
Maximum Cyclic Input Speed	[rpm]	--	3,000				
Maximum Radial Load	[N]	*2	6,890				
Maximum Axial Load	[N]	*3	4,890				
Moment of Inertia	[kgcm2]	--	9.17	9.12	9.08	9.07	9.06
Efficiency	[%]	*4	83	81	76	71	66
Torsional Rigidity	[Nm/arcmin]	--	15.5				
Maximum Torsional Backlash	[Arc-min]	--	≤ 15				
Noise Level	dB [A]	*5	≤ 83				
Ambient Temperature	[°C]	--	-25 ~ 93				
Permitted Housing Temperature	[°C]	--	100				
Protection Class	--	--	IP55				
Lubrication	--	--	Synthetic Oil				
Service Life	[Hours]	--	25,000				
Weight	[kg]	*6	20				

*1) Torque at no load applied to the input shaft at 2,000 rpm
*2) The maximum radial load the gearbox can accept
*3) The maximum axial load the gearbox can accept
*4) The efficiency at the nominal output torque rating
*5) Measured with no load applied to the input shaft at 2,000 rpm
*6) Weight may vary slightly between models

EJM 011 1-Stage Specifications

Frame Size	**011**						
Ratio	Unit	Note	5	7.5	10	15	20
Nominal Output Torque	[Nm]	--	374	398	395	469	485
Maximum Acceleration Torque	[Nm]	--	486	506	477	577	597
Emergency Stop Torque	[Nm]	--	748	796	790	938	970
No Load Running Torque	[Nm]	*1	5.83				
Nominal Input Speed	[rpm]	--	2,000				
Maximum Continuous Input Speed	[rpm]	--	2,000				
Maximum Cyclic Input Speed	[rpm]	--	3,000				
Maximum Radial Load	[N]	*2	9,780				
Maximum Axial Load	[N]	*3	5,780				
Moment of Inertia	[kgcm2]	--	25.3	19.8	17.9	16.5	16.0
Efficiency	[%]	*4	94	93	92	90	87
Torsional Rigidity	[Nm/arcmin]	--	28.4				
Maximum Torsional Backlash	[Arc-min]	--	≤ 12				
Noise Level	dB [A]	*5	≤ 85				
Ambient Temperature	[°C]	--	-25 ~ 93				
Permitted Housing Temperature	[°C]	--	100				
Protection Class	--	--	IP55				
Lubrication	--	--	Synthetic Oil				
Service Life	[Hours]	--	25,000				
Weight	[kg]	*6	30				

*1) Torque at no load applied to the input shaft at 2,000 rpm

*2) The maximum radial load the gearbox can accept

*3) The maximum axial load the gearbox can accept

*4) The efficiency at the nominal output torque rating

*5) Measured with no load applied to the input shaft at 2,000 rpm

*6) Weight may vary slightly between models

EJM 011 1-Stage Specifications

Frame Size	**011**						
Ratio	Unit	Note	25	30	40	50	60
Nominal Output Torque	[Nm]	--	474	505	455	427	407
Maximum Acceleration Torque	[Nm]	--	580	614	551	514	489
Emergency Stop Torque	[Nm]	--	948	1010	910	854	814
No Load Running Torque	[Nm]	*1	5.83				
Nominal Input Speed	[rpm]	--	2,000				
Maximum Continuous Input Speed	[rpm]	--	2,000				
Maximum Cyclic Input Speed	[rpm]	--	3,000				
Maximum Radial Load	[N]	*2	9,780				
Maximum Axial Load	[N]	*3	5,780				
Moment of Inertia	[kgcm2]	--	15.8	15.7	15.6	15.5	15.5
Efficiency	[%]	*4	84	83	78	73	69
Torsional Rigidity	[Nm/arcmin]	--	28.4				
Maximum Torsional Backlash	[Arc-min]	--	≤ 12				
Noise Level	dB [A]	*5	≤ 85				
Ambient Temperature	[°C]	--	-25 ~ 93				
Permitted Housing Temperature	[°C]	--	100				
Protection Class	--	--	IP55				
Lubrication	--	--	Synthetic Oil				
Service Life	[Hours]	--	25,000				
Weight	[kg]	*6	30				

*1) Torque at no load applied to the input shaft at 2,000 rpm

*2) The maximum radial load the gearbox can accept

*3) The maximum axial load the gearbox can accept

*4) The efficiency at the nominal output torque rating

*5) Measured with no load applied to the input shaft at 2,000 rpm

*6) Weight may vary slightly between models

EJM Dimensions – Hollow Output Shaft

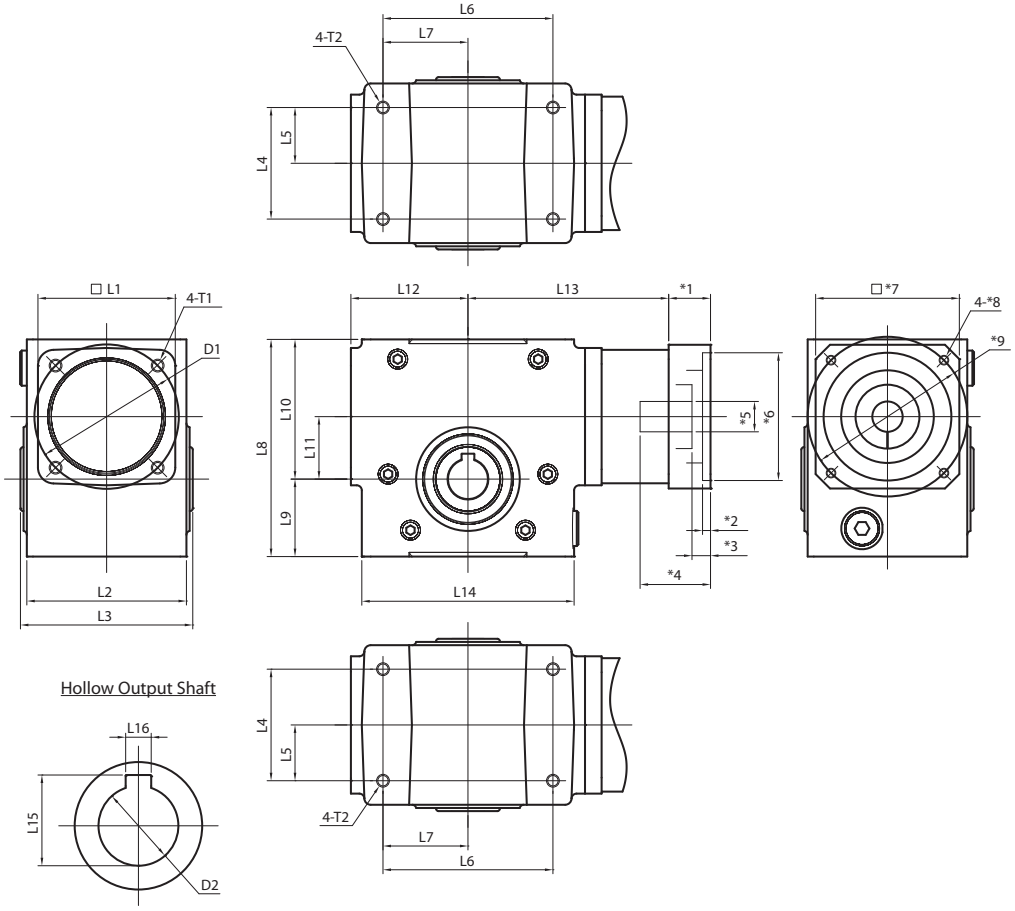

Frame Size	Unit	Note	EJM-002	EJM-003	EJM-005	EJM-006	EJM-009	EJM-011
L1	[mm]	--	60	86	86	86	116	116
L2	[mm]	--	70	100	100	100	130	130
L3	[mm]	--	98	108	107	108	138	169
L4	[mm]	--	51	70	73	73	102	102
L5	[mm]	--	25	35	37	37	51	51
L6	[mm]	--	83	106	127	127	178	191
L7	[mm]	--	41	53	64	64	89	95
L8	[mm]	--	118.5	136	162	176	225.5	250
L9	[mm]	--	43.5	48.5	58	63.5	82.5	86
L10	[mm]	--	75	87.5	104	112.5	143	164
L11	[mm]	--	33.8	39.1	50.0	60.5	76.2	89.9
L12	[mm]	--	67	73	84	95	117	130
L13	[mm]	--	126	126	136	147	184	197
L14	[mm]	--	110	133	152	178	229	241
L15	[mm]	--	23	28.5	38.5	38.5	59.5	80
L16	[mm]	--	6	8	10	10	16	20
D1	[mm]	--	ø64	ø90.5	ø90.5	ø90.5	ø127	ø127
D2 (H7)	[mm]	--	ø20	ø25	ø35	ø35	ø55	ø75
T1	[mm]	--	M8x12	M8x12	M8x12	M8x12	M8x12	M8x12
T2	[mm]	--	M8x12	M8x12	M10x15	M10x15	M12x18	M16x24
***1 ~**	[mm]	*9	Motor attachment dimensions are made to fit your servo motor.					

EJM Dimensions – Solid Output Shaft

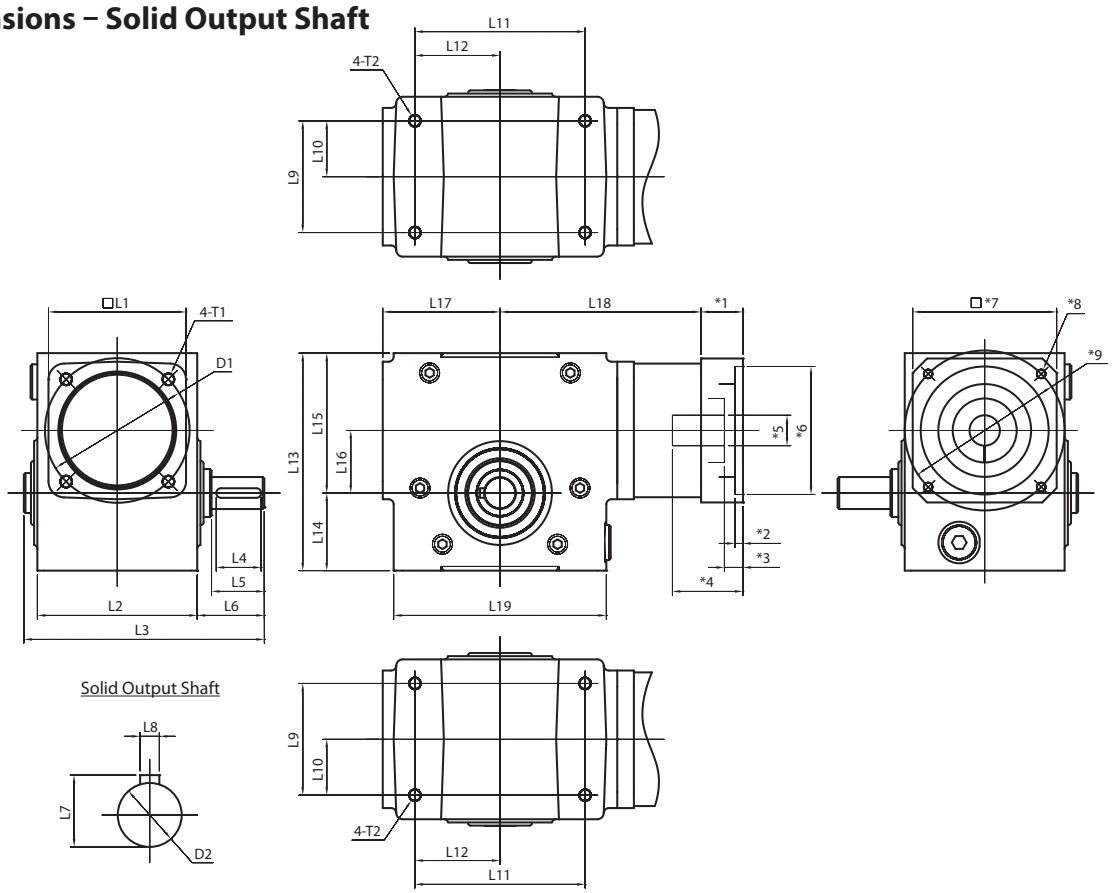

Frame Size	Unit	Note	EJM-002	EJM-003	EJM-005	EJM-006	EJM-009	EJM-011
L1	[mm]	--	60	86	86	86	116	116
L2	[mm]	--	70	100	100	100	130	130
L3	[mm]	--	140.5	150.5	156	173	204	261
L4	[mm]	--	28	28	36	50	50	70
L5	[mm]	--	33	33	39	55	54	79
L6	[mm]	--	52	42	48	64	64	105
L7	[mm]	--	22.5	22.5	28	33	38	45
L8	[mm]	--	6	6	8	8	10	12
L9	[mm]	--	51	70	73	73	102	102
L10	[mm]	--	25.5	35	36.5	36.5	51	51
L11	[mm]	--	83	106	127	127	178	191
L12	[mm]	--	41.5	53	63.5	63.5	89	95.5
L13	[mm]	--	118.5	136	162	176	225.5	250
L14	[mm]	--	43.5	48.5	58	63.5	82.5	86
L15	[mm]	--	75	87.5	104	112.5	143	164
L16	[mm]	--	33.8	39.1	50.0	60.5	76.2	89.9
L17	[mm]	--	67	73.5	84	95	117	130
L18	[mm]	--	125.5	125.5	136.5	147.5	184	197
L19	[mm]	--	110	133	152.5	178	228.5	241.5
D1	[mm]	--	ø64	ø90.5	ø90.5	ø90.5	ø127	ø127
D2 (h6)	[mm]	--	ø20	ø20	ø25	ø30	ø35	ø42
T1	[mm]	--	M8 x12	M8 x12	M8 x12	M8 x12	M8 x12	M8 x12
T2	[mm]	--	M8 x12	M8 x12	M10 x15	M10 x15	M12 x18	M16 x24
***1 ~**	[mm]	*9	Motor attachment dimensions are made to fit your servo motor.					

EJL SERIES

The EJL series is the perfect option for dynamic servo applications requiring high accuracy in a cost-effective package. The EJL series is available in 3 backlash levels, as low as 1 arc-min, to satisfy a variety of applications. Output options include single and dual shaft, hollow bore with keyway, hollow bore with shrink disc and robotic ISO flange. EJL is available in ratios as high as 90:1 in a single stage and maximum acceleration torque as high as 6250Nm.

Hardened and ground worms and bronze alloy wheels deliver high torque, smooth operation, and superior shock load absorption. Over-sized taper roller bearings accommodate high radial forces. A unique 3 bearing arrangement maintains proper worm bearing preload over all allowable temperature ranges.

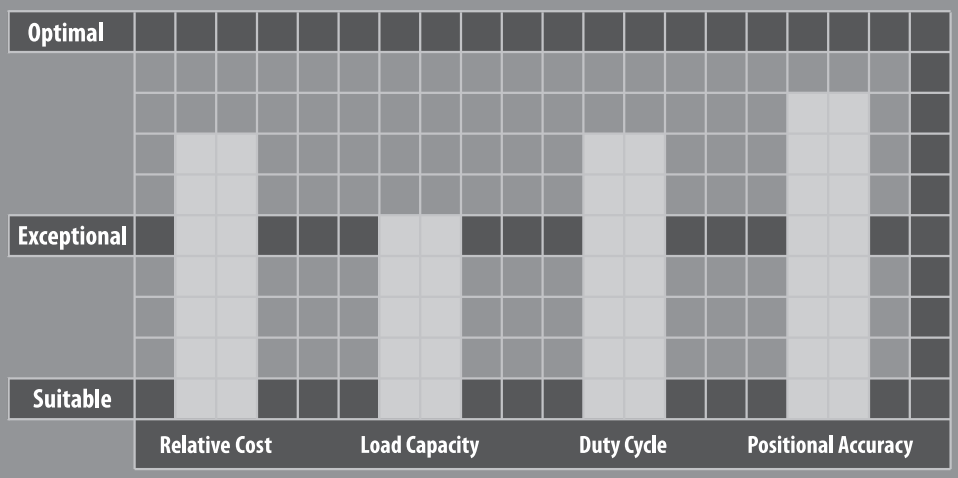

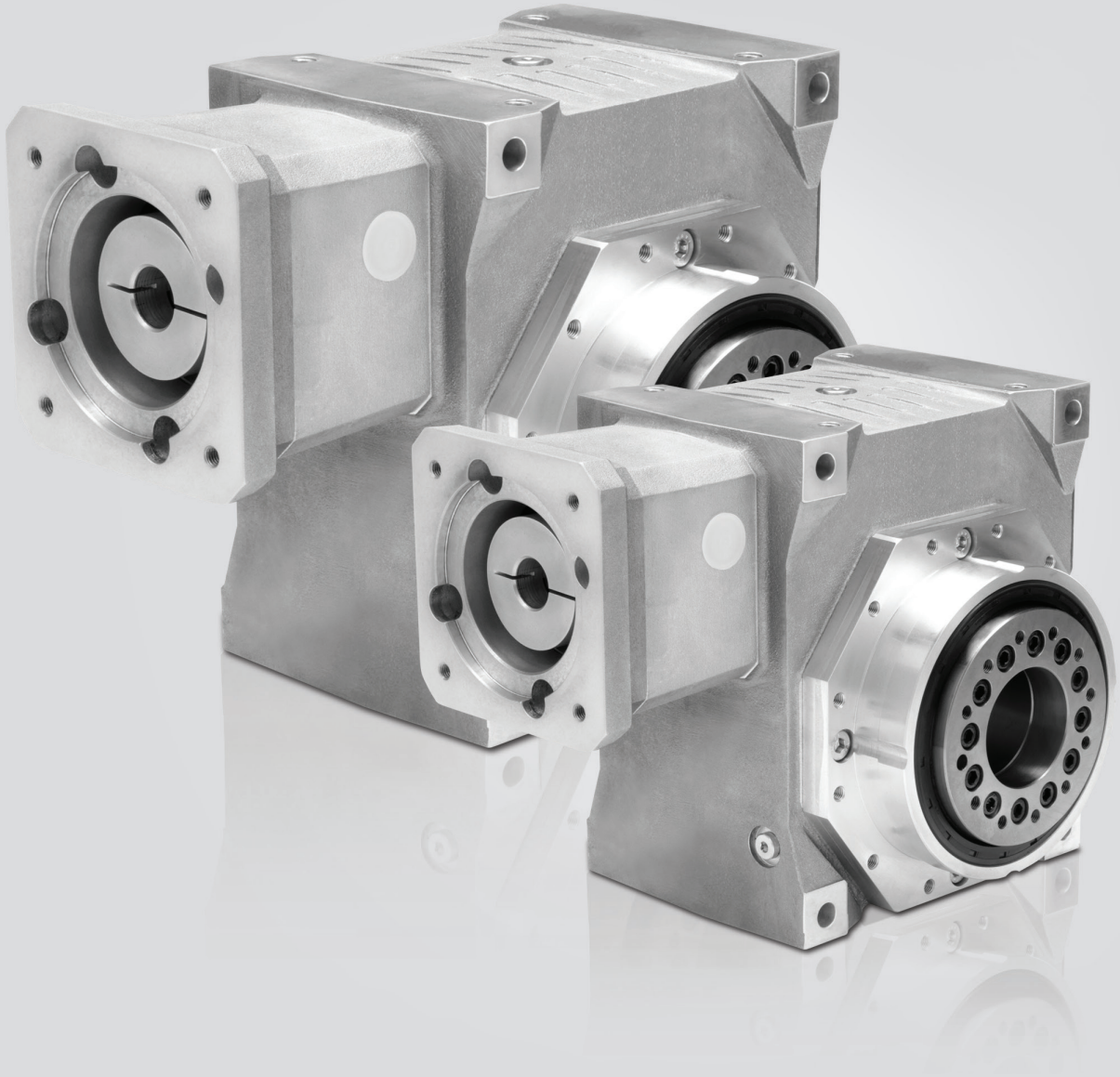

EJL SERIES

- Best price-performance ratio among all servo worm gearheads
- Three levels of backlash, as low as 1 arc-min to meet any application requirement
- Output options include single and dual shaft, hollow bore with keyway, hollow bore with shrink disc and robotic ISO flange
- 11 frame sizes with ratios up to 90:1 in a single stage

EJL Series Features

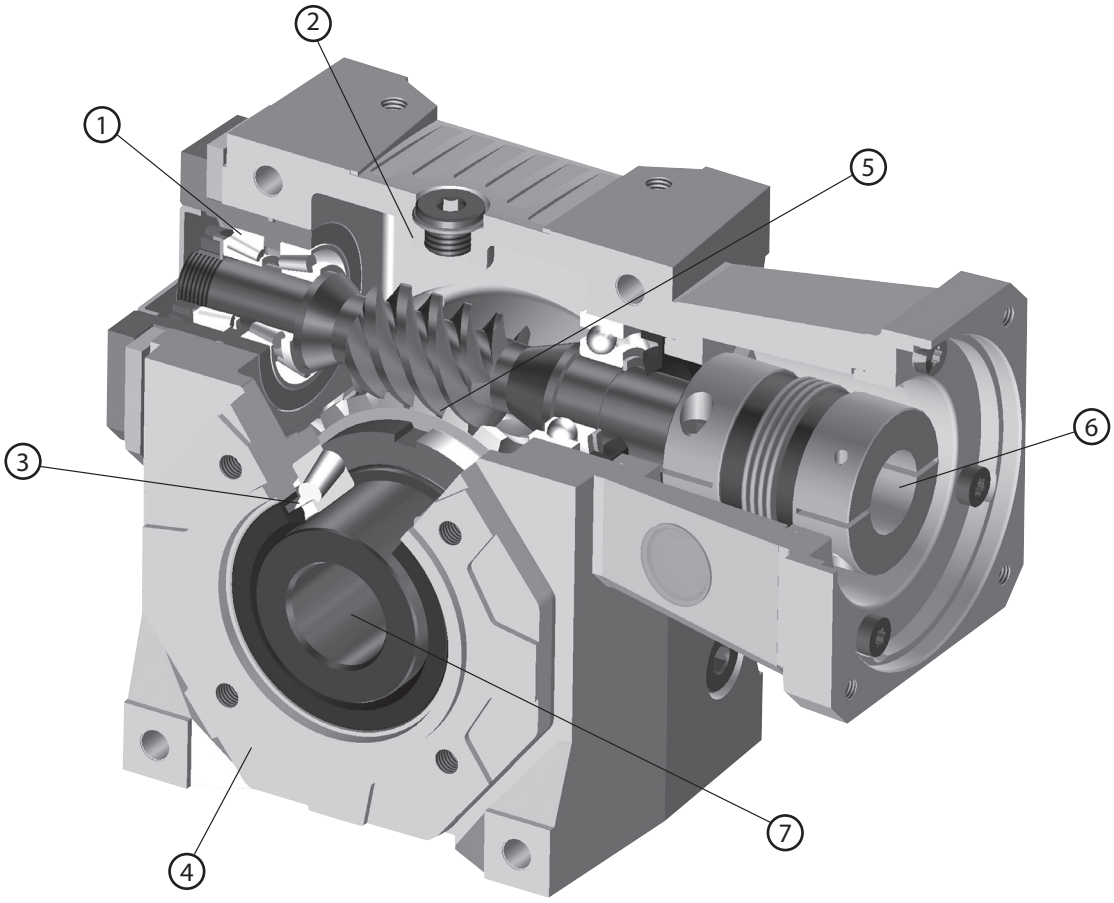

1. Tapered bearing input with constant preload over all allowable temperature ranges. High stiffness and long life
2. Maintenance-free, lubricated for life with high performance synthetic oil
3. Oversized tapered roller bearing at the output provides unmatched radial load and tilting moment capacity
4. Single piece housing made of cast and heat treated aluminum magnesium alloy offering superior rigidity and low weight (Sizes 125-200 utilize a cast iron housing)
5. Optimized gear contact pattern. 90% of teeth in contact resulting in excellent wear resistance and low backlash maintained throughout the life of the gearhead
6. Simple servomotor mounting. Adapter plates designed to mount to any motor and a high stiffness bellows coupling to eliminate shaft misalignment
7. Wide range of output options include single shaft, dual shaft, keyed hollow, shrink disc and robotic ISO flange

EJL Series Model Code

EJL – 63 – 30 – H0 L – A11130 – D14 – H1

- **H1** — Mounting position (sizes 125-200 Only)
- **A11130 – D14** — *Motor mounting code
- **L** — Backlash:
  - 0: Standard Backlash (10 arc-min)
  - L: Low Backlash (5 arc-min)
  - P: Precision Backlash (1 arc-min, 2 arc-min for sizes 125, 160, 200)
- **H0** — Output mounting type:
  - H0: Keyed Hollow Shaft
  - SR: Keyed Solid Shaft Right
  - SL: Keyed Solid Shaft Left
  - SW: Keyed Dual Solid Shaft
  - DR: Hollow Shrink Disc Right
  - DL: Hollow Shrink Disc Left
  - FR: Robot Flange Right
  - FL: Robot Flange Left
- **30** — Ratio: 3.125, 5.125, 5.2, 7.2, 7.25, 10.25, 14.5, 15.25, 19.5, 20.5, 29.5, 30, 45, 60, 90
- **63** — Frame size: 25, 35, 45, 55, 63, 75, 90, 110, 125, 160, 200
- **EJL** — Series

* Motor mounting code varies depending on the motor. Contact us to configure the code.

EJL 025 1-Stage Specifications

Frame Size	025					
Ratio	Unit	Note	5.2	7.25	10.25	14.5
Nominal Output Torque	[Nm]	*1	8	8	8	9
Maximum Acceleration Torque	[Nm]	*1	13	14	13	15
Emergency Stop Torque	[Nm]	--	46	46	46	46
No Load Running Torque	[Nm]	*2	0.23	0.25	0.19	0.18
Nominal Input Speed	[rpm]	*1	4,000			
Maximum Continuous Input Speed	[rpm]	*1	4,000			
Maximum Cyclic Input Speed	[rpm]	--	6,000			
Maximum Radial Load	[N]	*3	1500			
Maximum Axial Load	[N]	*4	500			
Moment of Inertia	[kgcm2]	--	0.02	0.02	0.01	0.01
Efficiency	[%]	*5	86	85	84	77
Torsional Rigidity	[Nm/arcmin]	--	2			
Maximum Torsional Backlash (Standard)	[Arc-min]	--	≤ 15			
Noise Level	dB [A]	*6	60			
Ambient Temperature	[°C]	--	-30 to +40			
Permitted Housing Temperature	[°C]	--	+80			
Protection Class	--	--	IP65			
Lubrication	--	--	Synthetic Oil			
Service Life	[Hours]	--	25,000			
Weight	[kg]	*7	1.4			

*1) Higher output torque is available at reduced speed. Contact us if you need to operate outside of these parameters

*2) Input torque with no load applied to the output shaft at 2,000 rpm

*3) The maximum radial load the gearbox can accept

*4) The maximum axial load the gearbox can accept

*5) The efficiency at the nominal output torque and input speed rating

*6) Measured with no load applied to the output shaft at 3,000 rpm and 1 meter distance

*7) Weight may vary slightly between models

EJL 025 1-Stage Specifications

Frame Size	**025**					
Ratio	Unit	Note	19.5	30	45	60
Nominal Output Torque	[Nm]	*1	9	11	11	10
Maximum Acceleration Torque	[Nm]	*1	15	18	18	16
Emergency Stop Torque	[Nm]	--	46	46	42	35
No Load Running Torque	[Nm]	*2	0.18	0.15	0.15	0.14
Nominal Input Speed	[rpm]	*1	4,000			
Maximum Continuous Input Speed	[rpm]	*1	4,000			
Maximum Cyclic Input Speed	[rpm]	--	6,000			
Maximum Radial Load	[N]	*3	1500			
Maximum Axial Load	[N]	*4	500			
Moment of Inertia	[kgcm2]	--	0.01	0.01	0.01	0.01
Efficiency	[%]	*5	74	65	59	53
Torsional Rigidity	[Nm/arcmin]	--	2			
Maximum Torsional Backlash (Standard)	[Arc-min]	--	≤ 15			
Noise Level	dB [A]	*6	60			
Ambient Temperature	[°C]	--	-30 to +40			
Permitted Housing Temperature	[°C]	--	+80			
Protection Class	--	--	IP65			
Lubrication	--	--	Synthetic Oil			
Service Life	[Hours]	--	25,000			
Weight	[kg]	*7	1.4			

*1) Higher output torque is available at reduced speed. Contact us if you need to operate outside of these parameters

*2) Input torque with no load applied to the output shaft at 2,000 rpm

*3) The maximum radial load the gearbox can accept

*4) The maximum axial load the gearbox can accept

*5) The efficiency at the nominal output torque and input speed rating

*6) Measured with no load applied to the output shaft at 3,000 rpm and 1 meter distance

*7) Weight may vary slightly between models

EJL 035 1-Stage Specifications

Frame Size	**035**						
Ratio	Unit	Note	5.2	7.25	10.25	14.5	19.5
Nominal Output Torque	[Nm]	*1	16	17	17	19	20
Maximum Acceleration Torque	[Nm]	*1	27	28	29	31	32
Emergency Stop Torque	[Nm]	--	96	96	96	96	96
No Load Running Torque	[Nm]	*2	0.46	0.46	0.30	0.32	0.30
Nominal Input Speed	[rpm]	*1	4,000				
Maximum Continuous Input Speed	[rpm]	*1	4,000				
Maximum Cyclic Input Speed	[rpm]	--	6,000				
Maximum Radial Load	[N]	*3	3,800				
Maximum Axial Load	[N]	*4	2,800				
Moment of Inertia	[kgcm2]	--	0.07	0.06	0.05	0.04	0.04
Efficiency	[%]	*5	91	89	87	81	78
Torsional Rigidity	[Nm/arcmin]	--	5				
Maximum Torsional Backlash (Standard)	[Arc-min]	--	≤ 10				
Maximum Torsional Backlash (Low)	[Arc-min]	--	≤ 5				
Maximum Torsional Backlash (Precision)	[Arc-min]	--	≤ 1				
Noise Level	dB [A]	*6	60				
Ambient Temperature	[°C]	--	-30 to +90				
Permitted Housing Temperature	[°C]	--	+80				
Protection Class	--	--	IP65				
Lubrication	--	--	Synthetic Oil				
Service Life	[Hours]	--	25,000				
Weight	[kg]	*7	3.5				

*1) Higher output torque is available at reduced speed. Contact us if you need to operate outside of these parameters

*2) Input torque with no load applied to the output shaft at 2,000 rpm

*3) The maximum radial load the gearbox can accept

*4) The maximum axial load the gearbox can accept

*5) The efficiency at the nominal output torque and input speed rating

*6) Measured with no load applied to the output shaft at 3,000 rpm and 1 meter distance

*7) Weight may vary slightly between models

EJL 035 1-Stage Specifications

Frame Size	**035**					
Ratio	Unit	Note	30	45	60	90
Nominal Output Torque	[Nm]	*1	23	23	22	21
Maximum Acceleration Torque	[Nm]	*1	37	36	34	32
Emergency Stop Torque	[Nm]	--	96	87	73	72
No Load Running Torque	[Nm]	*2	0.27	0.26	0.26	0.29
Nominal Input Speed	[rpm]	*1	4,000			
Maximum Continuous Input Speed	[rpm]	*1	4,000			
Maximum Cyclic Input Speed	[rpm]	--	6,000			
Maximum Radial Load	[N]	*3	3,800			
Maximum Axial Load	[N]	*4	2,800			
Moment of Inertia	[kgcm2]	--	0.04	0.04	0.03	0.02
Efficiency	[%]	*5	69	61	55	46
Torsional Rigidity	[Nm/arcmin]	--	5			
Maximum Torsional Backlash (Standard)	[Arc-min]	--	≤ 10			
Maximum Torsional Backlash (Low)	[Arc-min]	--	≤ 5			
Maximum Torsional Backlash (Precision)	[Arc-min]	--	≤ 1			
Noise Level	dB [A]	*6	60			
Ambient Temperature	[°C]	--	-30 to +90			
Permitted Housing Temperature	[°C]	--	+80			
Protection Class	--	--	IP65			
Lubrication	--	--	Synthetic Oil			
Service Life	[Hours]	--	25,000			
Weight	[kg]	*7	3.5			

*1) Higher output torque is available at reduced speed. Contact us if you need to operate outside of these parameters

*2) Input torque with no load applied to the output shaft at 2,000 rpm

*3) The maximum radial load the gearbox can accept

*4) The maximum axial load the gearbox can accept

*5) The efficiency at the nominal output torque and input speed rating

*6) Measured with no load applied to the output shaft at 3,000 rpm and 1 meter distance

*7) Weight may vary slightly between models

EJL 045 1-Stage Specifications

Frame Size	045						
Ratio	Unit	Note	3.125	5.2	7.25	10.25	14.5
Nominal Output Torque	[Nm]	*1	30	36	42	46	52
Maximum Acceleration Torque	[Nm]	*1	48	62	71	80	83
Emergency Stop Torque	[Nm]	--	214	214	214	214	214
No Load Running Torque	[Nm]	*2	1.07	0.98	0.86	0.77	0.66
Nominal Input Speed	[rpm]	*1	4,000				
Maximum Continuous Input Speed	[rpm]	*1	4,000				
Maximum Cyclic Input Speed	[rpm]	--	6,000				
Maximum Radial Load	[N]	*3	5,800				
Maximum Axial Load	[N]	*4	4,000				
Moment of Inertia	[kgcm2]	--	0.47	0.29	0.22	0.15	0.14
Efficiency	[%]	*5	93	92	91	90	86
Torsional Rigidity	[Nm/arcmin]	--	9				
Maximum Torsional Backlash (Standard)	[Arc-min]	--	≤ 10				
Maximum Torsional Backlash (Low)	[Arc-min]	--	≤ 5				
Maximum Torsional Backlash (Precision)	[Arc-min]	--	≤ 1				
Noise Level	dB [A]	*6	60				
Ambient Temperature	[°C]	--	-30 to +40				
Permitted Housing Temperature	[°C]	--	+80				
Protection Class	--	--	IP65				
Lubrication	--	--	Synthetic Oil				
Service Life	[Hours]	--	25,000				
Weight	[kg]	*7	6.5				

*1) Higher output torque is available at reduced speed. Contact us if you need to operate outside of these parameters

*2) Input torque with no load applied to the output shaft at 2,000 rpm

*3) The maximum radial load the gearbox can accept

*4) The maximum axial load the gearbox can accept

*5) The efficiency at the nominal output torque and input speed rating

*6) Measured with no load applied to the output shaft at 3,000 rpm and 1 meter distance

*7) Weight may vary slightly between models

EJL 045 1-Stage Specifications

Frame Size	**045**						
Ratio	Unit	Note	19.5	30	45	60	90
Nominal Output Torque	[Nm]	*1	50	55	54	50	46
Maximum Acceleration Torque	[Nm]	*1	80	88	86	78	71
Emergency Stop Torque	[Nm]	--	214	214	185	170	154
No Load Running Torque	[Nm]	*2	0.58	0.59	0.46	0.54	0.56
Nominal Input Speed	[rpm]	*1	4,000				
Maximum Continuous Input Speed	[rpm]	*1	4,000				
Maximum Cyclic Input Speed	[rpm]	--	6,000				
Maximum Radial Load	[N]	*3	5,800				
Maximum Axial Load	[N]	*4	4,000				
Moment of Inertia	[kgcm2]	--	0.10	0.10	0.08	0.07	0.05
Efficiency	[%]	*5	84	76	69	64	56
Torsional Rigidity	[Nm/arcmin]	--	9				
Maximum Torsional Backlash (Standard)	[Arc-min]	--	≤ 10				
Maximum Torsional Backlash (Low)	[Arc-min]	--	≤ 5				
Maximum Torsional Backlash (Precision)	[Arc-min]	--	≤ 1				
Noise Level	dB [A]	*6	60				
Ambient Temperature	[°C]	--	-30 to +40				
Permitted Housing Temperature	[°C]	--	+80				
Protection Class	--	--	IP65				
Lubrication	--	--	Synthetic Oil				
Service Life	[Hours]	--	25,000				
Weight	[kg]	*7	6.5				

*1) Higher output torque is available at reduced speed. Contact us if you need to operate outside of these parameters

*2) Input torque with no load applied to the output shaft at 2,000 rpm

*3) The maximum radial load the gearbox can accept

*4) The maximum axial load the gearbox can accept

*5) The efficiency at the nominal output torque and input speed rating

*6) Measured with no load applied to the output shaft at 3,000 rpm and 1 meter distance

*7) Weight may vary slightly between models

EJL 055 1-Stage Specifications

Frame Size	**055**						
Ratio	Unit	Note	3.125	5.2	7.25	10.25	14.5
Nominal Output Torque	[Nm]	*1	52	60	65	76	71
Maximum Acceleration Torque	[Nm]	*1	83	103	111	132	115
Emergency Stop Torque	[Nm]	--	307	307	307	307	307
No Load Running Torque	[Nm]	*2	1.24	1.15	1.15	0.96	0.96
Nominal Input Speed	[rpm]	*1	4,000				
Maximum Continuous Input Speed	[rpm]	*1	4,000				
Maximum Cyclic Input Speed	[rpm]	--	6,000				
Maximum Radial Load	[N]	*3	7,000				
Maximum Axial Load	[N]	*4	4,800				
Moment of Inertia	[kgcm2]	--	1.1	0.75	0.53	0.45	0.38
Efficiency	[%]	*5	93	93	91	88	85
Torsional Rigidity	[Nm/arcmin]	--	20				
Maximum Torsional Backlash (Standard)	[Arc-min]	--	≤ 10				
Maximum Torsional Backlash (Low)	[Arc-min]	--	≤ 5				
Maximum Torsional Backlash (Precision)	[Arc-min]	--	≤ 1				
Noise Level	dB [A]	*6	70				
Ambient Temperature	[°C]	--	-30 to +40				
Permitted Housing Temperature	[°C]	--	+80				
Protection Class	--	--	IP65				
Lubrication	--	--	Synthetic Oil				
Service Life	[Hours]	--	25,000				
Weight	[kg]	*7	8.9				

*1) Higher output torque is available at reduced speed. Contact us if you need to operate outside of these parameters

*2) Input torque with no load applied to the output shaft at 2,000 rpm

*3) The maximum radial load the gearbox can accept

*4) The maximum axial load the gearbox can accept

*5) The efficiency at the nominal output torque and input speed rating

*6) Measured with no load applied to the output shaft at 3,000 rpm and 1 meter distance

*7) Weight may vary slightly between models

EJL 055 1-Stage Specifications

Frame Size	**055**						
Ratio	Unit	Note	19.5	30	45	60	90
Nominal Output Torque	[Nm]	*1	77	83	83	82	76
Maximum Acceleration Torque	[Nm]	*1	123	130	130	128	117
Emergency Stop Torque	[Nm]	--	307	307	307	286	263
No Load Running Torque	[Nm]	*2	0.80	0.82	0.75	0.61	0.66
Nominal Input Speed	[rpm]	*1	4,000				
Maximum Continuous Input Speed	[rpm]	*1	4,000				
Maximum Cyclic Input Speed	[rpm]	--	6,000				
Maximum Radial Load	[N]	*3	7,000				
Maximum Axial Load	[N]	*4	4,800				
Moment of Inertia	[kgcm2]	--	0.31	0.34	0.28	0.26	0.12
Efficiency	[%]	*5	83	75	69	63	55
Torsional Rigidity	[Nm/arcmin]	--	20				
Maximum Torsional Backlash (Standard)	[Arc-min]	--	≤ 10				
Maximum Torsional Backlash (Low)	[Arc-min]	--	≤ 5				
Maximum Torsional Backlash (Precision)	[Arc-min]	--	≤ 1				
Noise Level	dB [A]	*6	70				
Ambient Temperature	[°C]	--	-30 to +40				
Permitted Housing Temperature	[°C]	--	+80				
Protection Class	--	--	IP65				
Lubrication	--	--	Synthetic Oil				
Service Life	[Hours]	--	25,000				
Weight	[kg]	*7	8.9				

*1) Higher output torque is available at reduced speed. Contact us if you need to operate outside of these parameters

*2) Input torque with no load applied to the output shaft at 2,000 rpm

*3) The maximum radial load the gearbox can accept

*4) The maximum axial load the gearbox can accept

*5) The efficiency at the nominal output torque and input speed rating

*6) Measured with no load applied to the output shaft at 3,000 rpm and 1 meter distance

*7) Weight may vary slightly between models

EJL 063 1-Stage Specifications

Frame Size	063						
Ratio	Unit	Note	5.2	7.25	10.25	14.5	19.5
Nominal Output Torque	[Nm]	*1	90	91	103	110	119
Maximum Acceleration Torque	[Nm]	*1	153	155	169	179	190
Emergency Stop Torque	[Nm]	--	497	497	497	497	497
No Load Running Torque	[Nm]	*2	2.51	1.76	1.81	1.15	1.08
Nominal Input Speed	[rpm]	*1	4,000				
Maximum Continuous Input Speed	[rpm]	*1	4,000				
Maximum Cyclic Input Speed	[rpm]	--	6,000				
Maximum Radial Load	[N]	*3	8,800				
Maximum Axial Load	[N]	*4	8,500				
Moment of Inertia	[kgcm2]	--	1.6	0.9	0.8	0.69	0.55
Efficiency	[%]	*5	93	92	91	87	85
Torsional Rigidity	[Nm/arcmin]	--	36				
Maximum Torsional Backlash (Standard)	[Arc-min]	--	≤ 10				
Maximum Torsional Backlash (Low)	[Arc-min]	--	≤ 5				
Maximum Torsional Backlash (Precision)	[Arc-min]	--	≤ 1				
Noise Level	dB [A]	*6	70				
Ambient Temperature	[°C]	--	-30 to +40				
Permitted Housing Temperature	[°C]	--	+80				
Protection Class	--	--	IP65				
Lubrication	--	--	Synthetic Oil				
Service Life	[Hours]	--	25,000				
Weight	[kg]	*7	14.5				

*1) Higher output torque is available at reduced speed. Contact us if you need to operate outside of these parameters

*2) Input torque with no load applied to the output shaft at 2,000 rpm

*3) The maximum radial load the gearbox can accept

*4) The maximum axial load the gearbox can accept

*5) The efficiency at the nominal output torque and input speed rating

*6) Measured with no load applied to the output shaft at 3,000 rpm and 1 meter distance

*7) Weight may vary slightly between models

EJL 063 1-Stage Specifications

Frame Size	**063**					
Ratio	Unit	Note	30	45	60	90
Nominal Output Torque	[Nm]	*1	138	123	121	110
Maximum Acceleration Torque	[Nm]	*1	218	193	189	169
Emergency Stop Torque	[Nm]	--	497	403	404	368
No Load Running Torque	[Nm]	*2	1.10	1.02	1.15	1.18
Nominal Input Speed	[rpm]	*1	4,000			
Maximum Continuous Input Speed	[rpm]	*1	4,000			
Maximum Cyclic Input Speed	[rpm]	--	6,000			
Maximum Radial Load	[N]	*3	8,800			
Maximum Axial Load	[N]	*4	8,500			
Moment of Inertia	[kgcm2]	--	0.59	0.5	0.47	0.32
Efficiency	[%]	*5	78	72	67	59
Torsional Rigidity	[Nm/arcmin]	--	36			
Maximum Torsional Backlash (Standard)	[Arc-min]	--	≤ 10			
Maximum Torsional Backlash (Low)	[Arc-min]	--	≤ 5			
Maximum Torsional Backlash (Precision)	[Arc-min]	--	≤ 1			
Noise Level	dB [A]	*6	70			
Ambient Temperature	[°C]	--	-30 to +40			
Permitted Housing Temperature	[°C]	--	+80			
Protection Class	--	--	IP65			
Lubrication	--	--	Synthetic Oil			
Service Life	[Hours]	--	25,000			
Weight	[kg]	*7	14.5			

*1) Higher output torque is available at reduced speed. Contact us if you need to operate outside of these parameters

*2) Input torque with no load applied to the output shaft at 2,000 rpm

*3) The maximum radial load the gearbox can accept

*4) The maximum axial load the gearbox can accept

*5) The efficiency at the nominal output torque and input speed rating

*6) Measured with no load applied to the output shaft at 3,000 rpm and 1 meter distance

*7) Weight may vary slightly between models

EJL 075 1-Stage Specifications

Frame Size	075						
Ratio	Unit	Note	5.2	7.25	10.25	14.5	19.5
Nominal Output Torque	[Nm]	*1	174	161	168	195	194
Maximum Acceleration Torque	[Nm]	*1	296	270	269	315	310
Emergency Stop Torque	[Nm]	--	834	834	834	834	834
No Load Running Torque	[Nm]	*2	2.89	2.55	2.26	1.93	1.71
Nominal Input Speed	[rpm]	*1	3,000				
Maximum Continuous Input Speed	[rpm]	*1	4,000				
Maximum Cyclic Input Speed	[rpm]	--	6,000				
Maximum Radial Load	[N]	*3	10,500				
Maximum Axial Load	[N]	*4	10,500				
Moment of Inertia	[kgcm2]	--	3.7	2.5	2.2	1.9	1.5
Efficiency	[%]	*5	94	92	91	87	85
Torsional Rigidity	[Nm/arcmin]	--	50				
Maximum Torsional Backlash (Standard)	[Arc-min]	--	≤ 10				
Maximum Torsional Backlash (Low)	[Arc-min]	--	≤ 5				
Maximum Torsional Backlash (Precision)	[Arc-min]	--	≤ 1				
Noise Level	dB [A]	*6	75				
Ambient Temperature	[°C]	--	-30 to +40				
Permitted Housing Temperature	[°C]	--	+80				
Protection Class	--	--	IP65				
Lubrication	--	--	Synthetic Oil				
Service Life	[Hours]	--	25,000				
Weight	[kg]	*7	21.3				

*1) Higher output torque is available at reduced speed. Contact us if you need to operate outside of these parameters

*2) Input torque with no load applied to the output shaft at 2,000 rpm

*3) The maximum radial load the gearbox can accept

*4) The maximum axial load the gearbox can accept

*5) The efficiency at the nominal output torque and input speed rating

*6) Measured with no load applied to the output shaft at 3,000 rpm and 1 meter distance

*7) Weight may vary slightly between models

EJL 075 1-Stage Specifications

Frame Size	**075**					
Ratio	Unit	Note	30	45	60	90
Nominal Output Torque	[Nm]	*1	212	212	195	184
Maximum Acceleration Torque	[Nm]	*1	334	331	300	280
Emergency Stop Torque	[Nm]	--	834	718	657	625
No Load Running Torque	[Nm]	*2	1.74	1.41	1.60	1.65
Nominal Input Speed	[rpm]	*1	3,000			
Maximum Continuous Input Speed	[rpm]	*1	4,000			
Maximum Cyclic Input Speed	[rpm]	--	6,000			
Maximum Radial Load	[N]	*3	10,500			
Maximum Axial Load	[N]	*4	10,500			
Moment of Inertia	[kgcm2]	--	1.6	1.4	1.3	0.8
Efficiency	[%]	*5	80	71	66	57
Torsional Rigidity	[Nm/arcmin]	--	50			
Maximum Torsional Backlash (Standard)	[Arc-min]	--	≤ 10			
Maximum Torsional Backlash (Low)	[Arc-min]	--	≤ 5			
Maximum Torsional Backlash (Precision)	[Arc-min]	--	≤ 1			
Noise Level	dB [A]	*6	75			
Ambient Temperature	[°C]	--	-30 to +40			
Permitted Housing Temperature	[°C]	--	+80			
Protection Class	--	--	IP65			
Lubrication	--	--	Synthetic Oil			
Service Life	[Hours]	--	25,000			
Weight	[kg]	*7	21.3			

*1) Higher output torque is available at reduced speed. Contact us if you need to operate outside of these parameters

*2) Input torque with no load applied to the output shaft at 2,000 rpm

*3) The maximum radial load the gearbox can accept

*4) The maximum axial load the gearbox can accept

*5) The efficiency at the nominal output torque and input speed rating

*6) Measured with no load applied to the output shaft at 3,000 rpm and 1 meter distance

*7) Weight may vary slightly between models

EJL 090 1-Stage Specifications

Frame Size	**090**						
Ratio	Unit	Note	5.2	7.25	10.25	14.5	19.5
Nominal Output Torque	[Nm]	*1	271	306	314	314	367
Maximum Acceleration Torque	[Nm]	*1	460	490	528	504	584
Emergency Stop Torque	[Nm]	--	1,543	1,543	1,543	1,543	1,543
No Load Running Torque	[Nm]	*2	2.97	2.62	2.33	1.99	1.76
Nominal Input Speed	[rpm]	*1	3,000				
Maximum Continuous Input Speed	[rpm]	*1	4,000				
Maximum Cyclic Input Speed	[rpm]	--	6,000				
Maximum Radial Load	[N]	*3	15,800				
Maximum Axial Load	[N]	*4	13,000				
Moment of Inertia	[kgcm2]	--	8.5	6	3.8	3.2	2.5
Efficiency	[%]	*5	94	94	92	88	87
Torsional Rigidity	[Nm/arcmin]	--	75				
Maximum Torsional Backlash (Standard)	[Arc-min]	--	≤ 10				
Maximum Torsional Backlash (Low)	[Arc-min]	--	≤ 5				
Maximum Torsional Backlash (Precision)	[Arc-min]	--	≤ 1				
Noise Level	dB [A]	*6	75				
Ambient Temperature	[°C]	--	-30 to +40				
Permitted Housing Temperature	[°C]	--	+80				
Protection Class	--	--	IP65				
Lubrication	--	--	Synthetic Oil				
Service Life	[Hours]	--	25,000				
Weight	[kg]	*7	33.8				

*1) Higher output torque is available at reduced speed. Contact us if you need to operate outside of these parameters

*2) Input torque with no load applied to the output shaft at 2,000 rpm

*3) The maximum radial load the gearbox can accept

*4) The maximum axial load the gearbox can accept

*5) The efficiency at the nominal output torque and input speed rating

*6) Measured with no load applied to the output shaft at 3,000 rpm and 1 meter distance

*7) Weight may vary slightly between models

EJL 090 1-Stage Specifications

Frame Size	**090**					
Ratio	Unit	Note	30	45	60	90
Nominal Output Torque	[Nm]	*1	362	385	364	332
Maximum Acceleration Torque	[Nm]	*1	572	599	559	505
Emergency Stop Torque	[Nm]	--	1,543	1,255	1,230	1,114
No Load Running Torque	[Nm]	*2	1.79	1.43	1.65	1.70
Nominal Input Speed	[rpm]	*1	3,000			
Maximum Continuous Input Speed	[rpm]	*1	4,000			
Maximum Cyclic Input Speed	[rpm]	--	6,000			
Maximum Radial Load	[N]	*3	15,800			
Maximum Axial Load	[N]	*4	13,000			
Moment of Inertia	[kgcm2]	--	2.6	1.9	1.7	1
Efficiency	[%]	*5	80	76	72	64
Torsional Rigidity	[Nm/arcmin]	--	75			
Maximum Torsional Backlash (Standard)	[Arc-min]	--	≤ 10			
Maximum Torsional Backlash (Low)	[Arc-min]	--	≤ 5			
Maximum Torsional Backlash (Precision)	[Arc-min]	--	≤ 1			
Noise Level	dB [A]	*6	75			
Ambient Temperature	[°C]	--	-30 to +40			
Permitted Housing Temperature	[°C]	--	+80			
Protection Class	--	--	IP65			
Lubrication	--	--	Synthetic Oil			
Service Life	[Hours]	--	25,000			
Weight	[kg]	*7	33.8			

*1) Higher output torque is available at reduced speed. Contact us if you need to operate outside of these parameters

*2) Input torque with no load applied to the output shaft at 2,000 rpm

*3) The maximum radial load the gearbox can accept

*4) The maximum axial load the gearbox can accept

*5) The efficiency at the nominal output torque and input speed rating

*6) Measured with no load applied to the output shaft at 3,000 rpm and 1 meter distance

*7) Weight may vary slightly between models

EJL 110 1-Stage Specifications

Frame Size	110						
Ratio	Unit	Note	5.2	7.25	10.25	14.5	19.5
Nominal Output Torque	[Nm]	*1	458	488	522	519	589
Maximum Acceleration Torque	[Nm]	*1	779	795	878	830	943
Emergency Stop Torque	[Nm]	--	2,289	2,289	2,289	2,289	2,289
No Load Running Torque	[Nm]	*2	3.20	2.82	2.51	2.14	1.89
Nominal Input Speed	[rpm]	*1	3,000				
Maximum Continuous Input Speed	[rpm]	*1	4,000				
Maximum Cyclic Input Speed	[rpm]	--	6,000				
Maximum Radial Load	[N]	*3	21,500				
Maximum Axial Load	[N]	*4	16,000				
Moment of Inertia	[kgcm2]	--	18.5	13	8.5	6.3	4.6
Efficiency	[%]	*5	94	94	92	90	88
Torsional Rigidity	[Nm/arcmin]	--	120				
Maximum Torsional Backlash (Standard)	[Arc-min]	--	≤ 10				
Maximum Torsional Backlash (Low)	[Arc-min]	--	≤ 5				
Maximum Torsional Backlash (Precision)	[Arc-min]	--	≤ 1				
Noise Level	dB [A]	*6	75				
Ambient Temperature	[°C]	--	-30 to +40				
Permitted Housing Temperature	[°C]	--	+80				
Protection Class	--	--	IP65				
Lubrication	--	--	Synthetic Oil				
Service Life	[Hours]	--	25,000				
Weight	[kg]	*7	48.4				

*1) Higher output torque is available at reduced speed. Contact us if you need to operate outside of these parameters

*2) Input torque with no load applied to the output shaft at 2,000 rpm

*3) The maximum radial load the gearbox can accept

*4) The maximum axial load the gearbox can accept

*5) The efficiency at the nominal output torque and input speed rating

*6) Measured with no load applied to the output shaft at 3,000 rpm and 1 meter distance

*7) Weight may vary slightly between models

EJL 110 1-Stage Specifications

Frame Size	**110**					
Ratio	Unit	Note	30	45	60	90
Nominal Output Torque	[Nm]	*1	688	665	588	557
Maximum Acceleration Torque	[Nm]	*1	1,100	1,037	905	847
Emergency Stop Torque	[Nm]	--	2,289	2,152	2,094	1,941
No Load Running Torque	[Nm]	*2	1.93	1.51	1.78	1.83
Nominal Input Speed	[rpm]	*1	3,000			
Maximum Continuous Input Speed	[rpm]	*1	4,000			
Maximum Cyclic Input Speed	[rpm]	--	6,000			
Maximum Radial Load	[N]	*3	21,500			
Maximum Axial Load	[N]	*4	16,000			
Moment of Inertia	[kgcm2]	--	3.5	3.3	3	1.7
Efficiency	[%]	*5	83	78	73	66
Torsional Rigidity	[Nm/arcmin]	--	120			
Maximum Torsional Backlash (Standard)	[Arc-min]	--	≤ 10			
Maximum Torsional Backlash (Low)	[Arc-min]	--	≤ 5			
Maximum Torsional Backlash (Precision)	[Arc-min]	--	≤ 1			
Noise Level	dB [A]	*6	75			
Ambient Temperature	[°C]	--	-30 to +40			
Permitted Housing Temperature	[°C]	--	+80			
Protection Class	--	--	IP65			
Lubrication	--	--	Synthetic Oil			
Service Life	[Hours]	--	25,000			
Weight	[kg]	*7	48.4			

*1) Higher output torque is available at reduced speed. Contact us if you need to operate outside of these parameters

*2) Input torque with no load applied to the output shaft at 2,000 rpm

*3) The maximum radial load the gearbox can accept

*4) The maximum axial load the gearbox can accept

*5) The efficiency at the nominal output torque and input speed rating

*6) Measured with no load applied to the output shaft at 3,000 rpm and 1 meter distance

*7) Weight may vary slightly between models

EJL 125 1-Stage Specifications

Frame Size	**125**						
Ratio	Unit	Note	5.125	7.2	10.25	15.25	20.5
Nominal Output Torque	[Nm]	*1	716	742	725	625	877
Maximum Acceleration Torque	[Nm]	*1	1,181	1,224	1,196	1,031	1,447
Emergency Stop Torque	[Nm]	--	3,767	3,767	3,767	3,342	3,767
No Load Running Torque	[Nm]	*2	4.80	4.23	3.76	3.21	2.84
Nominal Input Speed	[rpm]	*1	3,000				
Maximum Continuous Input Speed	[rpm]	*1	4,000				
Maximum Cyclic Input Speed	[rpm]	--	6,000				
Maximum Radial Load	[N]	*3	26,000				
Maximum Axial Load	[N]	*4	22,000				
Moment of Inertia	[kgcm2]	--	50	38	30.5	25	23.4
Efficiency	[%]	*5	95	95	94	91	89
Torsional Rigidity	[Nm/arcmin]	--	180				
Maximum Torsional Backlash (Standard)	[Arc-min]	--	≤ 5				
Maximum Torsional Backlash (Precision)	[Arc-min]	--	≤ 2				
Noise Level	dB [A]	*6	80				
Ambient Temperature	[°C]	--	-30 to +40				
Permitted Housing Temperature	[°C]	--	+80				
Protection Class	--	--	IP65				
Lubrication	--	--	Synthetic Oil				
Service Life	[Hours]	--	25,000				
Weight	[kg]	*7	97.5				

*1) Higher output torque is available at reduced speed. Contact us if you need to operate outside of these parameters

*2) Input torque with no load applied to the output shaft at 2,000 rpm

*3) The maximum radial load the gearbox can accept

*4) The maximum axial load the gearbox can accept

*5) The efficiency at the nominal output torque and input speed rating

*6) Measured with no load applied to the output shaft at 3,000 rpm and 1 meter distance

*7) Weight may vary slightly between models

EJL 125 1-Stage Specifications

Frame Size	**125**					
Ratio	Unit	Note	29.5	45	60	90
Nominal Output Torque	[Nm]	*1	731	952	815	680
Maximum Acceleration Torque	[Nm]	*1	1,206	1,571	1,345	1,122
Emergency Stop Torque	[Nm]	--	3,295	3,767	2,937	2,502
No Load Running Torque	[Nm]	*2	2.90	2.27	2.66	2.74
Nominal Input Speed	[rpm]	*1	3,000			
Maximum Continuous Input Speed	[rpm]	*1	4,000			
Maximum Cyclic Input Speed	[rpm]	--	6,000			
Maximum Radial Load	[N]	*3	26,000			
Maximum Axial Load	[N]	*4	22,000			
Moment of Inertia	[kgcm2]	--	23.15	21	20	19
Efficiency	[%]	*5	85	80	74	64
Torsional Rigidity	[Nm/arcmin]	--	180			
Maximum Torsional Backlash (Standard)	[Arc-min]	--	≤ 5			
Maximum Torsional Backlash (Precision)	[Arc-min]	--	≤ 2			
Noise Level	dB [A]	*6	80			
Ambient Temperature	[°C]	--	-30 to +40			
Permitted Housing Temperature	[°C]	--	+80			
Protection Class	--	--	IP65			
Lubrication	--	--	Synthetic Oil			
Service Life	[Hours]	--	25,000			
Weight	[kg]	*7	97.5			

*1) Higher output torque is available at reduced speed. Contact us if you need to operate outside of these parameters

*2) Input torque with no load applied to the output shaft at 2,000 rpm

*3) The maximum radial load the gearbox can accept

*4) The maximum axial load the gearbox can accept

*5) The efficiency at the nominal output torque and input speed rating

*6) Measured with no load applied to the output shaft at 3,000 rpm and 1 meter distance

*7) Weight may vary slightly between models

EJL 160 1-Stage Specifications

Frame Size	**160**						
Ratio	Unit	Note	5.125	7.2	10.25	15.25	20.5
Nominal Output Torque	[Nm]	*1	1,648	1,569	1,650	1,443	1,856
Maximum Acceleration Torque	[Nm]	*1	2,719	2,589	2,723	2,381	3,062
Emergency Stop Torque	[Nm]	--	7,251	7,251	7,251	5,572	7,251
No Load Running Torque	[Nm]	*2	7.20	6.35	5.64	4.82	4.26
Nominal Input Speed	[rpm]	*1	2,000				
Maximum Continuous Input Speed	[rpm]	*1	4,000				
Maximum Cyclic Input Speed	[rpm]	--	6,000				
Maximum Radial Load	[N]	*3	34,100				
Maximum Axial Load	[N]	*4	34,000				
Moment of Inertia	[kgcm2]	--	120	77	63	52.7	51.5
Efficiency	[%]	*5	96	95	94	92	90
Torsional Rigidity	[Nm/arcmin]	--	350				
Maximum Torsional Backlash (Standard)	[Arc-min]	--	≤ 5				
Maximum Torsional Backlash (Precision)	[Arc-min]	--	≤ 2				
Noise Level	dB [A]	*6	80				
Ambient Temperature	[°C]	--	-30 to +40				
Permitted Housing Temperature	[°C]	--	+80				
Protection Class	--	--	IP65				
Lubrication	--	--	Synthetic Oil				
Service Life	[Hours]	--	25,000				
Weight	[kg]	*7	172.3				

*1) Higher output torque is available at reduced speed. Contact us if you need to operate outside of these parameters

*2) Input torque with no load applied to the output shaft at 2,000 rpm

*3) The maximum radial load the gearbox can accept

*4) The maximum axial load the gearbox can accept

*5) The efficiency at the nominal output torque and input speed rating

*6) Measured with no load applied to the output shaft at 3,000 rpm and 1 meter distance

*7) Weight may vary slightly between models

EJL 160 1-Stage Specifications

Frame Size	**160**					
Ratio	Unit	Note	29.5	45	60	90
Nominal Output Torque	[Nm]	*1	1,535	2,211	1,723	1,489
Maximum Acceleration Torque	[Nm]	*1	2,533	3,648	2,843	2,457
Emergency Stop Torque	[Nm]	--	6,571	7,251	6,331	4,933
No Load Running Torque	[Nm]	*2	4.35	3.41	4.00	4.11
Nominal Input Speed	[rpm]	*1	2,000			
Maximum Continuous Input Speed	[rpm]	*1	4,000			
Maximum Cyclic Input Speed	[rpm]	--	6,000			
Maximum Radial Load	[N]	*3	34,100			
Maximum Axial Load	[N]	*4	34,000			
Moment of Inertia	[kgcm2]	--	52.8	46.5	40	38
Efficiency	[%]	*5	86	81	76	67
Torsional Rigidity	[Nm/arcmin]	--	350			
Maximum Torsional Backlash (Standard)	[Arc-min]	--	≤ 5			
Maximum Torsional Backlash (Precision)	[Arc-min]	--	≤ 2			
Noise Level	dB [A]	*6	80			
Ambient Temperature	[°C]	--	-30 to +40			
Permitted Housing Temperature	[°C]	--	+80			
Protection Class	--	--	IP65			
Lubrication	--	--	Synthetic Oil			
Service Life	[Hours]	--	25,000			
Weight	[kg]	*7	172.3			

*1) Higher output torque is available at reduced speed. Contact us if you need to operate outside of these parameters

*2) Input torque with no load applied to the output shaft at 2,000 rpm

*3) The maximum radial load the gearbox can accept

*4) The maximum axial load the gearbox can accept

*5) The efficiency at the nominal output torque and input speed rating

*6) Measured with no load applied to the output shaft at 3,000 rpm and 1 meter distance

*7) Weight may vary slightly between models

EJL 200 1-Stage Specifications

Frame Size	200						
Ratio	Unit	Note	5.125	7.2	10.25	15.25	20.5
Nominal Output Torque	[Nm]	*1	2,954	3,042	2,946	2,540	3,538
Maximum Acceleration Torque	[Nm]	*1	4,874	5,019	4,861	4,191	5,838
Emergency Stop Torque	[Nm]	--	12,826	12,826	12,826	12,448	12,826
No Load Running Torque	[Nm]	*2	10.80	9.52	8.46	7.23	6.39
Nominal Input Speed	[rpm]	*1	2,000				
Maximum Continuous Input Speed	[rpm]	*1	4,000				
Maximum Cyclic Input Speed	[rpm]	--	6,000				
Maximum Radial Load	[N]	*3	71,700				
Maximum Axial Load	[N]	*4	71,000				
Moment of Inertia	[kgcm2]	--	287	177	143	102	96
Efficiency	[%]	*5	96	96	95	93	91
Torsional Rigidity	[Nm/arcmin]	--	600				
Maximum Torsional Backlash (Standard)	[Arc-min]	--	≤ 5				
Maximum Torsional Backlash (Precision)	[Arc-min]	--	≤ 2				
Noise Level	dB [A]	*6	80				
Ambient Temperature	[°C]	--	-30 to +40				
Permitted Housing Temperature	[°C]	--	+80				
Protection Class	--	--	IP65				
Lubrication	--	--	Synthetic Oil				
Service Life	[Hours]	--	25,000				
Weight	[kg]	*7	369.68				

*1) Higher output torque is available at reduced speed. Contact us if you need to operate outside of these parameters

*2) Input torque with no load applied to the output shaft at 2,000 rpm

*3) The maximum radial load the gearbox can accept

*4) The maximum axial load the gearbox can accept

*5) The efficiency at the nominal output torque and input speed rating

*6) Measured with no load applied to the output shaft at 3,000 rpm and 1 meter distance

*7) Weight may vary slightly between models

EJL 200 1-Stage Specifications

Frame Size	**200**					
Ratio	Unit	Note	29.5	45	60	90
Nominal Output Torque	[Nm]	*1	2,925	3,788	3,159	2,641
Maximum Acceleration Torque	[Nm]	*1	4,826	6,250	5,212	4,358
Emergency Stop Torque	[Nm]	--	12,277	12,826	11,674	9,323
No Load Running Torque	[Nm]	*2	6.52	5.11	5.99	6.17
Nominal Input Speed	[rpm]	*1	2,000			
Maximum Continuous Input Speed	[rpm]	*1	4,000			
Maximum Cyclic Input Speed	[rpm]	--	6,000			
Maximum Radial Load	[N]	*3	71,700			
Maximum Axial Load	[N]	*4	71,000			
Moment of Inertia	[kgcm2]	--	99	82.5	71	69
Efficiency	[%]	*5	87	83	77	69
Torsional Rigidity	[Nm/arcmin]	--	600			
Maximum Torsional Backlash (Standard)	[Arc-min]	--	≤ 5			
Maximum Torsional Backlash (Precision)	[Arc-min]	--	≤ 2			
Noise Level	dB [A]	*6	80			
Ambient Temperature	[°C]	--	-30 to +40			
Permitted Housing Temperature	[°C]	--	+80			
Protection Class	--	--	IP65			
Lubrication	--	--	Synthetic Oil			
Service Life	[Hours]	--	25,000			
Weight	[kg]	*7	369.68			

*1) Higher output torque is available at reduced speed. Contact us if you need to operate outside of these parameters

*2) Input torque with no load applied to the output shaft at 2,000 rpm

*3) The maximum radial load the gearbox can accept

*4) The maximum axial load the gearbox can accept

*5) The efficiency at the nominal output torque and input speed rating

*6) Measured with no load applied to the output shaft at 3,000 rpm and 1 meter distance

*7) Weight may vary slightly between models

EJL Dimensions – Hollow Output Shaft with Keyway

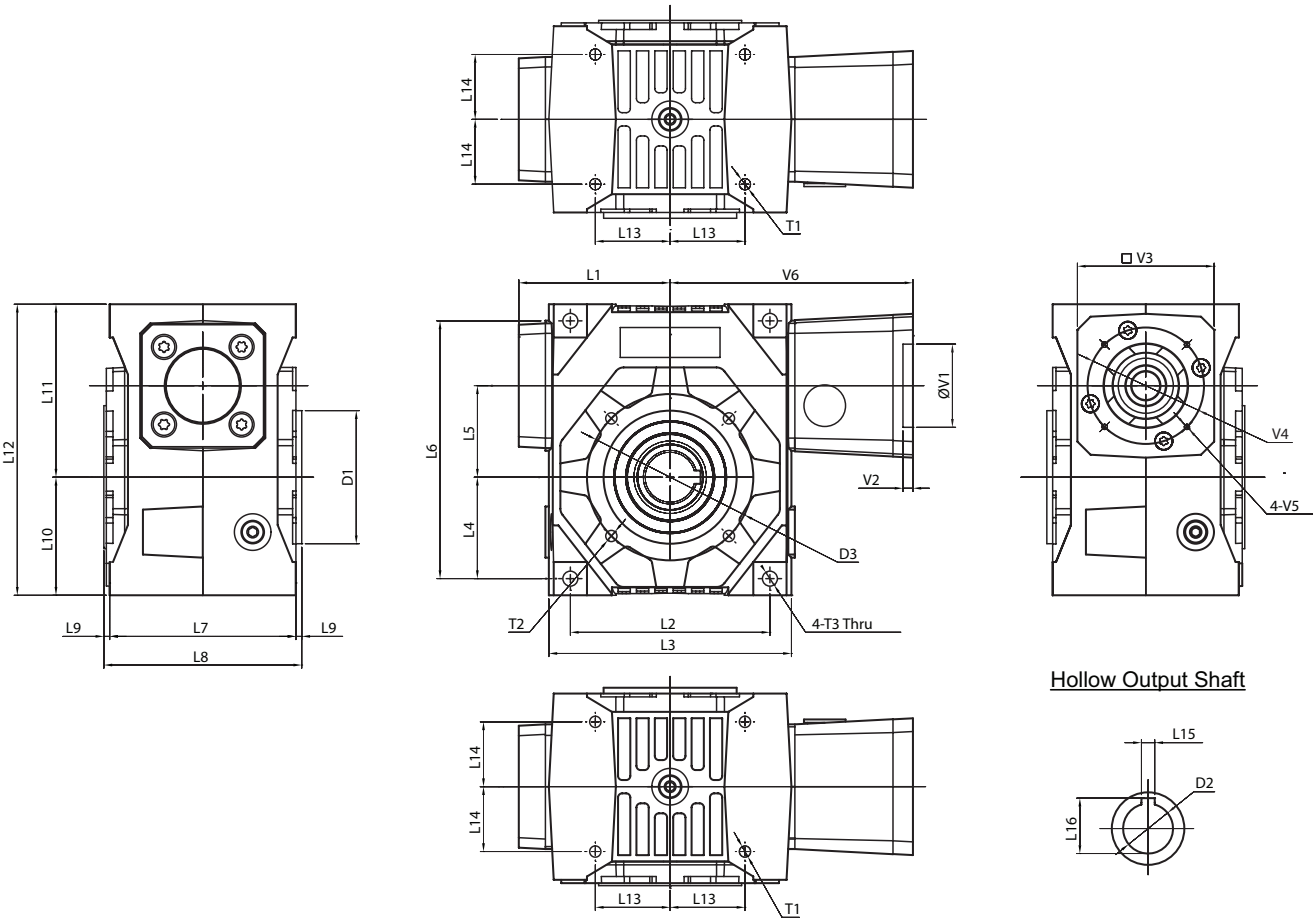

Frame Size	Unit	EJL25	EJL35	EJL45	EJL55
L1	[mm]	49	70	83.5	91
L2	[mm]	66	86	108	120
L3	[mm]	82	107	132	146
L4	[mm]	33	44.5	53	61
L5	[mm]	25	35	45	55
L6	[mm]	84	110	135	155
L7	[mm]	64	86	100	112
L8	[mm]	70	92	106	119
L9	[mm]	3	3	3	3.5
L10	[mm]	39	52.5	62	71
L11	[mm]	57	73.5	91	104
L12	[mm]	96	126	153	175
L13	[mm]	24.75	31	40.5	45
L14	[mm]	22	28	34	39
L15	[mm]	5	5	8	8
L16	[mm]	16.3	18.3	28.3	33.3
D1 (j7)	[mm]	55	50	70	80
D2 (H7)	[mm]	14	16	25	30
D3	[mm]	65	65	85	100
T1	[mm]	4-M5	4-M6	4-M8	4-M8
T2	[mm]	4-M5	4-M6	4-M8	4-M8
T3	[mm]	6.2	7	9	9
V1 ~ V6	Motor attachment dimensions are made to fit your servo motor.				

EJL Dimensions – Hollow Output Shaft with Keyway

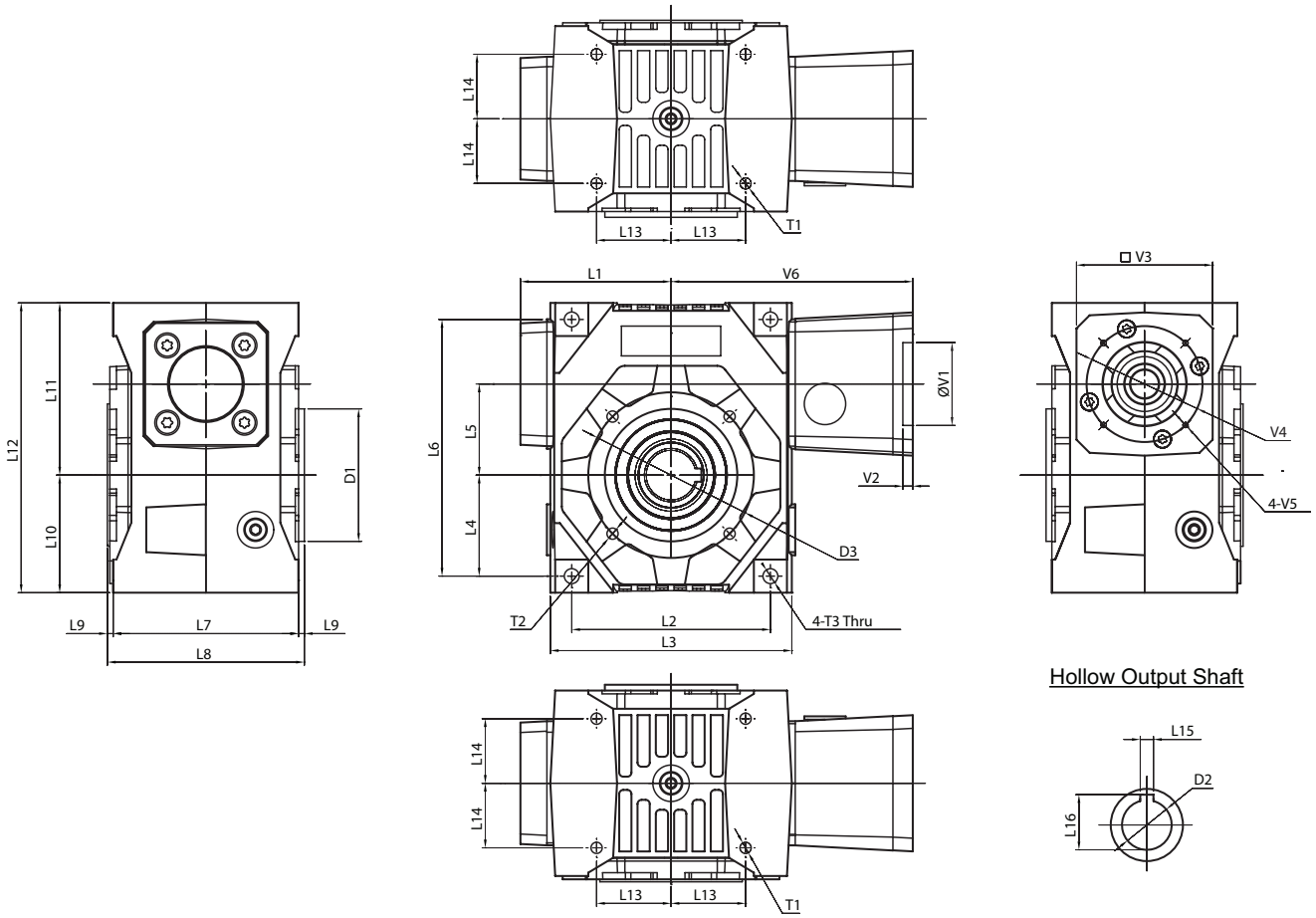

Frame Size	Unit	EJL63	EJL75	EJL90	EJL110
L1	[mm]	101	124	136.5	152
L2	[mm]	134	172	186	220
L3	[mm]	165	204	225	260
L4	[mm]	66	82	91	108
L5	[mm]	63	75	90	110
L6	[mm]	173	208	234	276
L7	[mm]	127	148	170	182
L8	[mm]	134	156	178	192
L9	[mm]	3.5	4	4	5
L10	[mm]	78	94	106	123
L11	[mm]	119	138	158	183
L12	[mm]	197	232	264	306
L13	[mm]	49	68	70.5	87.5
L14	[mm]	45.5	55	65	70
L15	[mm]	10	12	14	18
L16	[mm]	38.3	43.3	53.8	64.4
D1 (j7)	[mm]	95	110	130	165
D2 (H7)	[mm]	35	40	50	60
D3	[mm]	115	130	165	200
T1	[mm]	4-M10	4-M10	4-M12	8-M12
T2	[mm]	4-M10	4-M10	4-M12	8-M12
T3	[mm]	11	11	13	13
V1 ~ V6	Motor attachment dimensions are made to fit your servo motor.				

EJL Dimensions – Shrink Disc Hollow Output Shaft

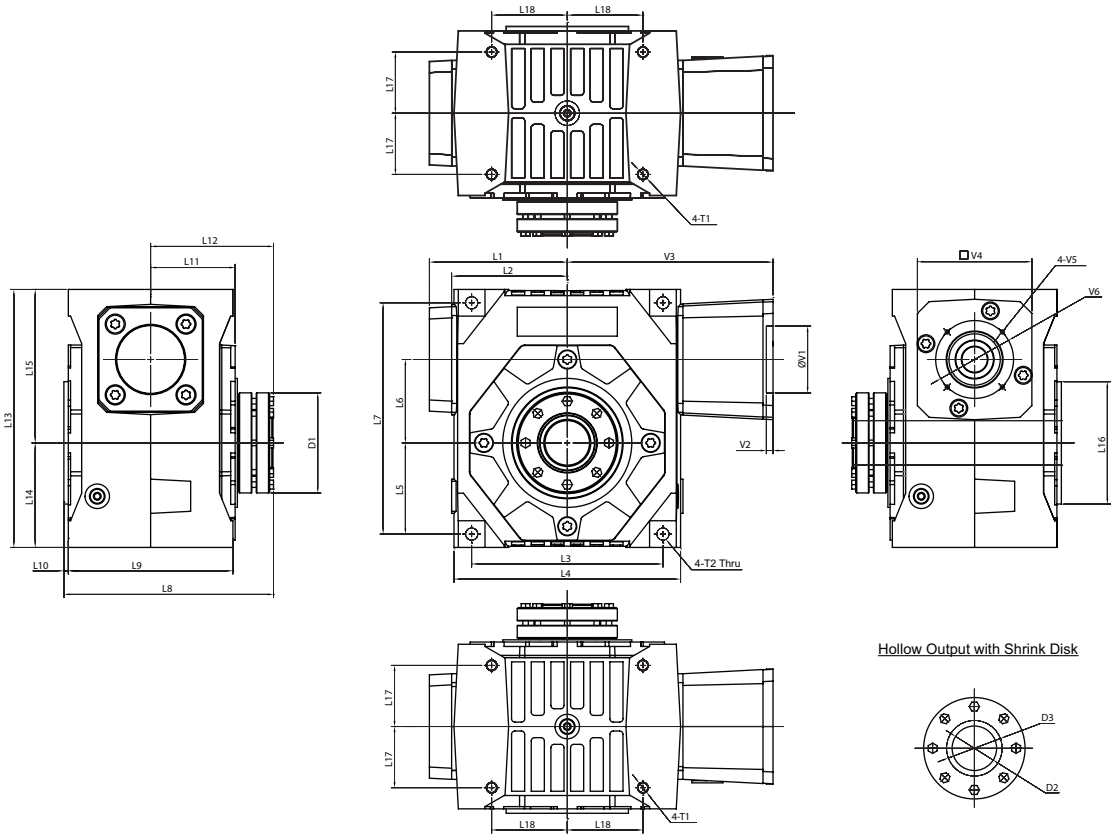

Frame Size	Unit	EJL35	EJL45	EJL55	EJL63	EJL75	EJL90	EJL110
L1	[mm]	70	83.5	91	101	124	136.5	152
L2	[mm]	55	67.5	75	84	104	114.5	132
L3	[mm]	86	108	120	134	172	186	220
L4	[mm]	107	132	146	165	204	225	260
L5	[mm]	44.5	53	61	66	82	91	108
L6	[mm]	35	45	55	63	75	90	110
L7	[mm]	110	135	155	173	208	234	276
L8	[mm]	117	132	150	165	188	213	229
L9	[mm]	86	100	112	127	148	170	182
L10	[mm]	3	3	3.5	3.5	4	4	5
L11	[mm]	45	52	58	65.5	76	88	94
L12	[mm]	70.5	79.5	90.5	98	110	124	133
L13	[mm]	126	153	175	197	232	264	306
L14	[mm]	52.5	62	71	78	94	106	123
L15	[mm]	73.5	91	104	119	138	158	183
L16	[mm]	50	70	80	95	110	130	165
L17	[mm]	28	34	39	45.5	55	65	70
L18	[mm]	31	40.5	45	49	68	70.5	87.5
D1	[mm]	50	60	72	80	90	115	145
D2 (H7)	[mm]	20	25	30	35	40	50	60
D3	[mm]	24	30	36	44	50	68	80
T1	[mm]	M6	M8	M8	M10	M10	M12	M12
T2	[mm]	7	9	9	11	11	13	13
V1 ~ V6	Motor attachment dimensions are made to fit your servo motor.							

EJL Dimensions – Shrink Disc Hollow Output Shaft

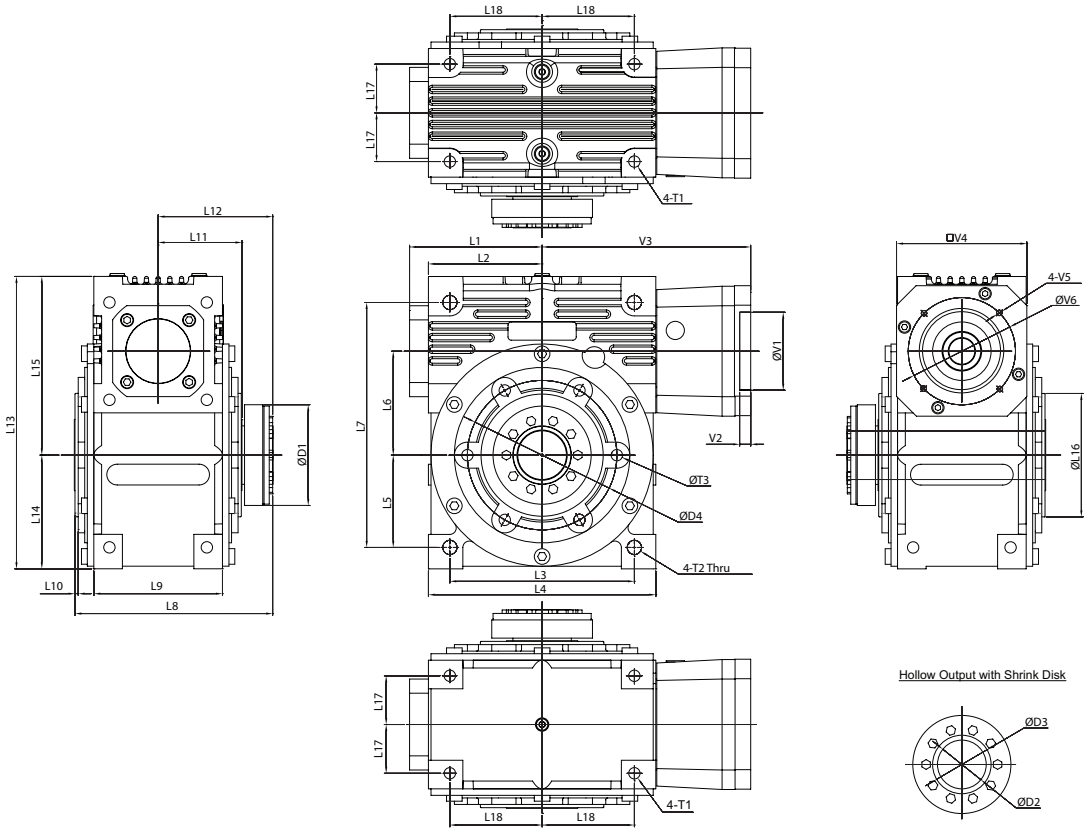

Frame Size	Unit	EJL125	EJL160	EJL200
L1	[mm]	163	204	251
L2	[mm]	135	175	216
L3	[mm]	214	284	342.5
L4	[mm]	270	346	432
L5	[mm]	107	142	171
L6	[mm]	125	160	200
L7	[mm]	302	377	483
L8	[mm]	274	305	456
L9	[mm]	180	198	288
L10	[mm]	4	5	5
L11	[mm]	117	129	192
L12	[mm]	157	177	264
L13	[mm]	360	450	576
L14	[mm]	135	175	216
L15	[mm]	225	275	360
L16	[mm]	160	190	250
L17	[mm]	70	75	112
L18	[mm]	107	142	171.25
D1	[mm]	145	155	230
D2 (H7)	[mm]	65	75	100
D3	[mm]	80	90	140
D4	[mm]	185	230	300
T1	[mm]	M16	M20	M20
T2	[mm]	17	22	28
T3	[mm]	6-M16	6-M20	8-M20
V1 ~ V6	Motor attachment dimensions are made to fit your servo motor.			

EJL Dimensions – Solid Output Shaft - Single and Double

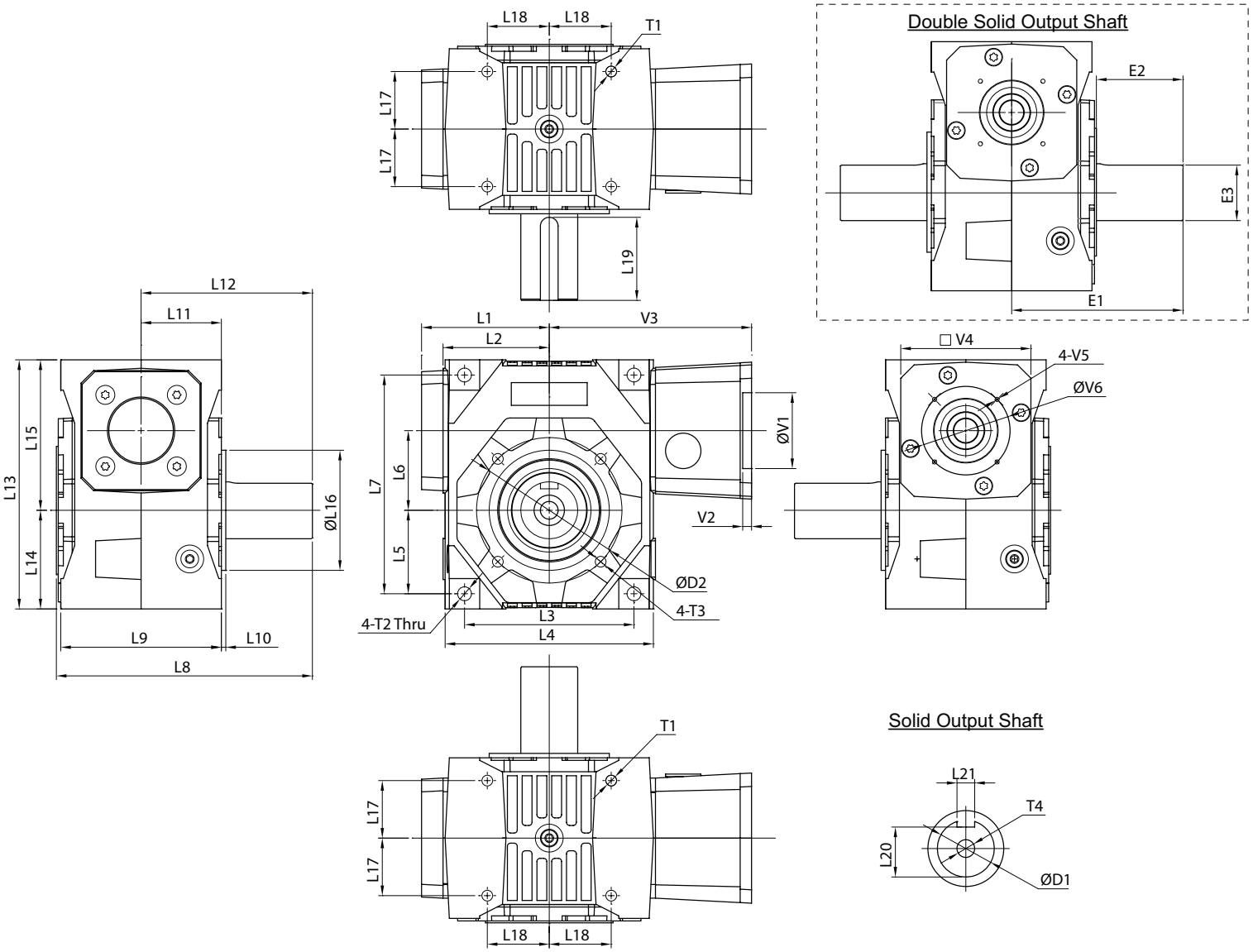

Frame Size	Unit	EJL35	EJL45	EJL55	EJL63	EJL75	EJL90	EJL110
L1	[mm]	70	83.5	91	101	124	136.5	152
L2	[mm]	55	67.5	75	84	104	114.5	132
L3	[mm]	86	108	120	134	172	186	220
L4	[mm]	107	132	146	165	204	225	260
L5	[mm]	44.5	53	61	66	82	91	108
L6	[mm]	35	45	55	63	75	90	110
L7	[mm]	110	135	155	173	208	234	276
L8	[mm]	129	160	178	203	229	276	304
L9	[mm]	86	100	112	127	148	170	182
L10	[mm]	3.0	3.0	3.5	3.5	4	4	5
L11	[mm]	45	50	58	63.5	74	85	91
L12	[mm]	83	107	118	135.5	151	187	208
L13	[mm]	126	153	175	197	232	264	306
L14	[mm]	52.5	62	71	78	94	106	123
L15	[mm]	73.5	91	104	119	138	158	183

EJL Dimensions – Solid Output Shaft - Single and Double

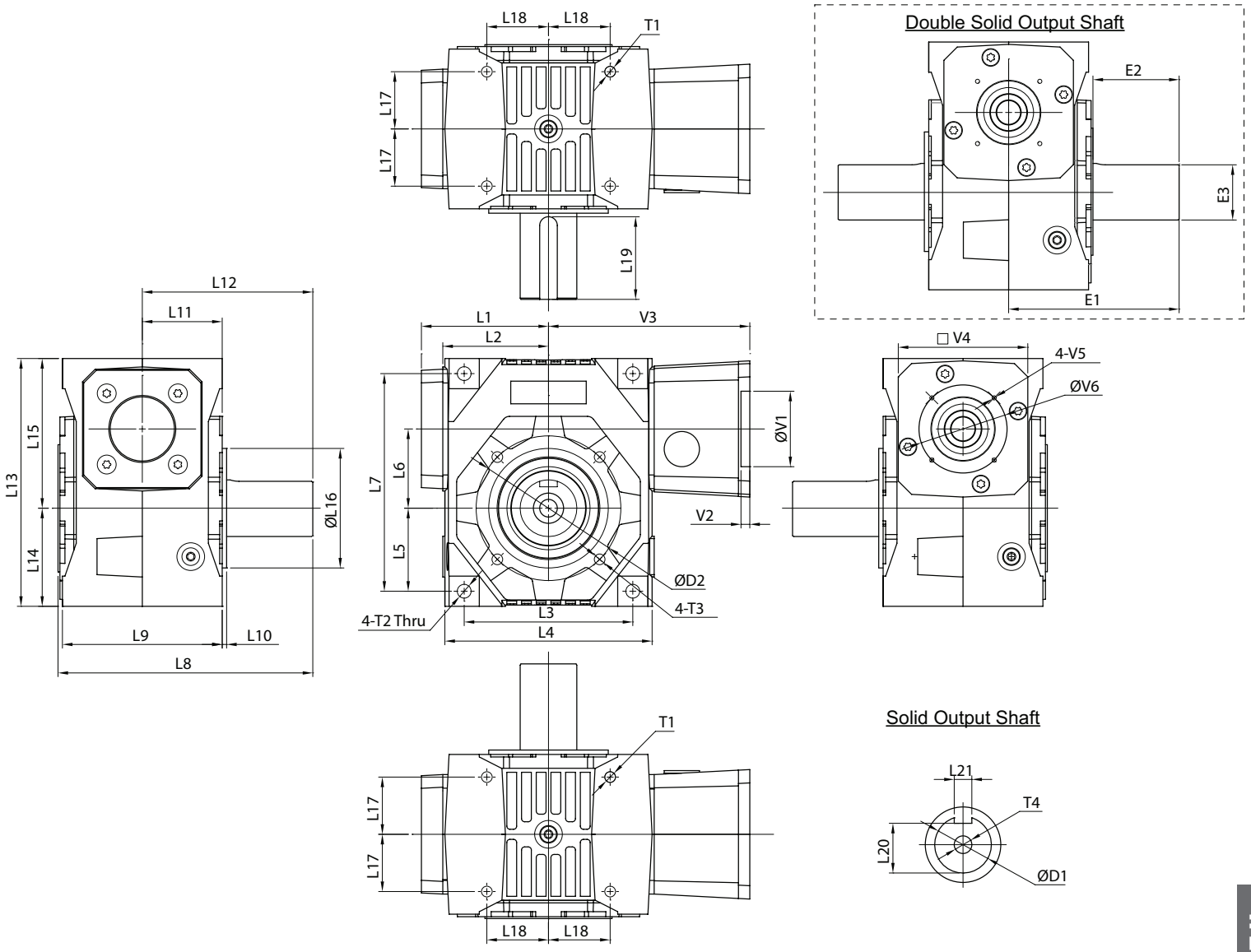

Frame Size	Unit	EJL35	EJL45	EJL55	EJL63	EJL75	EJL90	EJL110
L16 (j7)	[mm]	50	70	80	95	110	130	165
L17	[mm]	28	34	39	45.5	55	65	70
L18	[mm]	31	40.5	45	49	68	70.5	87.5
L19	[mm]	35	50	55	65	70	95.5	110
L20	[mm]	21	30	35	39.5	44.5	58.0	67.5
L21	[mm]	8	10	12	14	14	18	20
D1 (h6)	[mm]	25	35	40	45	50	65	75
D2	[mm]	65	85	100	115	130	165	200
T1	[mm]	M6	M8	M8	M10	M10	M12	M12
T2	[mm]	7	9	9	11	11	13	13
T3	[mm]	M6	M8	M8	M10	4-M10	4-M12	8-M12
T4	[mm]	M10	M12	M16	M16	M16	M20	M20
E1	[mm]	83	107	118	135.5	151	187	208
E2	[mm]	38(*)	55(*)	60(*)	70	75	100	115
E3 (h6)	[mm]	25	35	40	45	50	65	75
V1 ~ V6	Motor attachment dimensions are made to fit your servo motor.							

EJL Dimensions – Solid Output Shaft - Single Only

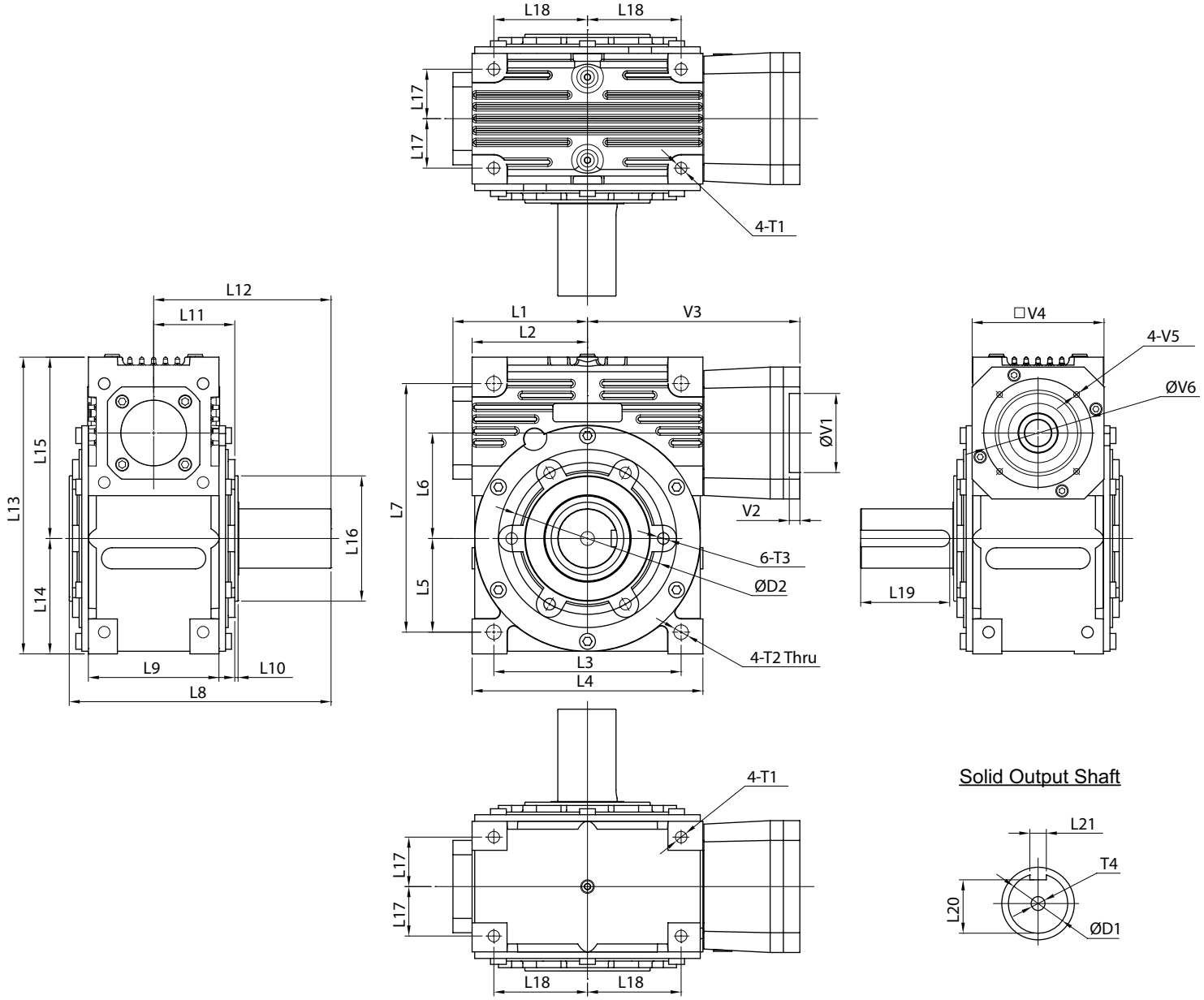

Solid Output Shaft

Frame Size	Unit	EJL125	EJL160	EJL200
L1	[mm]	163	204	251
L2	[mm]	135	175	216
L3	[mm]	214	284	342.5
L4	[mm]	270	350	432
L5	[mm]	107	142	171
L6	[mm]	125	160	200
L7	[mm]	302	377	483
L8	[mm]	348	397	551
L9	[mm]	180	198	288
L10	[mm]	4	5	5
L11	[mm]	111	123	187
L12	[mm]	233	269	359
L13	[mm]	360	450	576
L14	[mm]	135	175	216

EJL Dimensions – Solid Output Shaft - Single Only

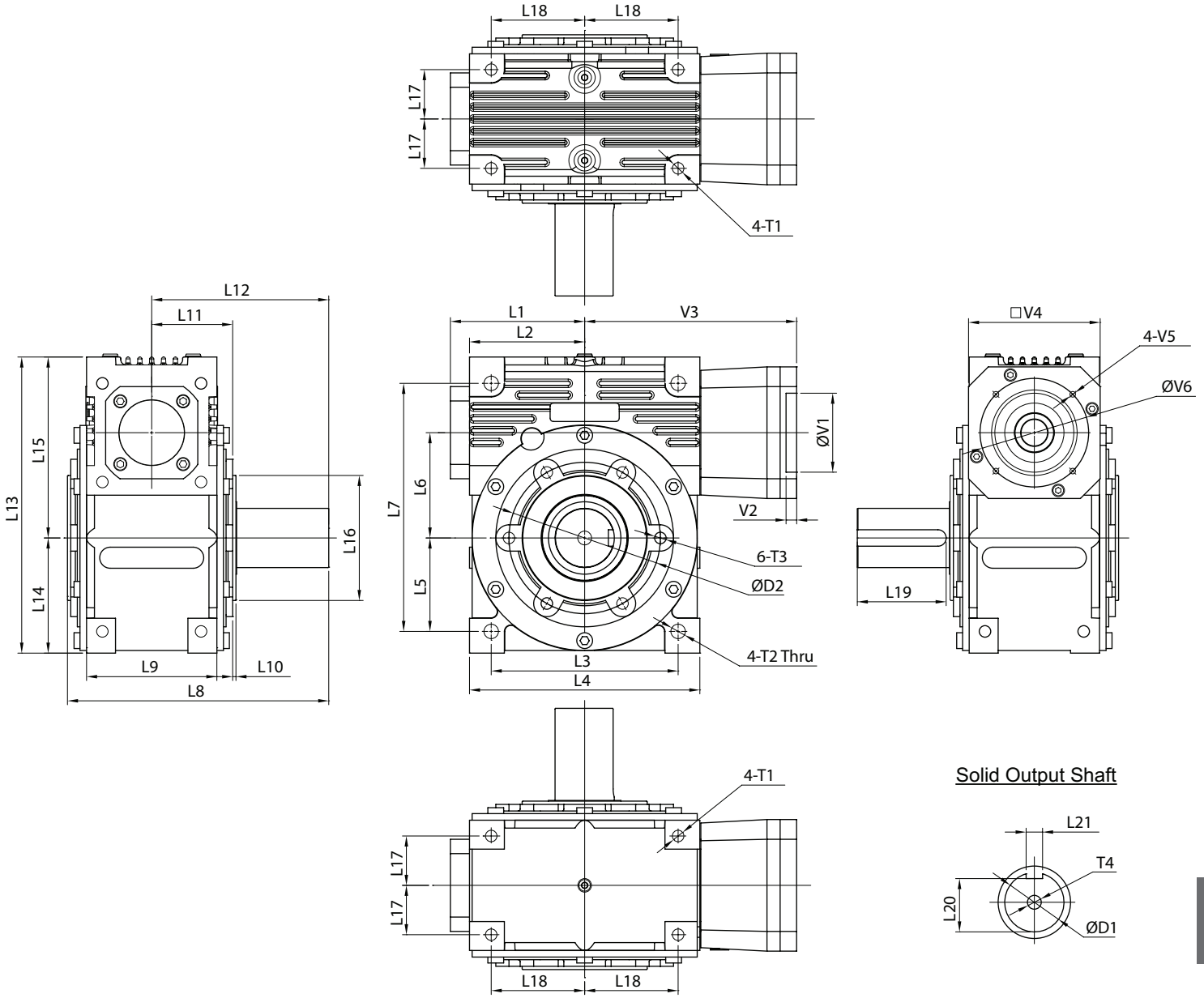

Frame Size	Unit	EJL125	EJL160	EJL200
L15	[mm]	225	275	360
L16 (j7)	[mm]	160	190	250
L17	[mm]	70	75	112
L18	[mm]	107	142	171.25
L19	[mm]	111	135	164
L20	[mm]	67.5	81.0	109.0
L21	[mm]	20.0	25.0	32.0
D1 (h6)	[mm]	75	90	120
D2	[mm]	185	230	300
T1	[mm]	M16	M20	M20
T2	[mm]	17	22	28
T3	[mm]	M16	M20	M20
T4	[mm]	M20	M24	M24
V1 ~ V6	Motor attachment dimensions are made to fit your servo motor.			

EJL Dimensions – Robot Flange

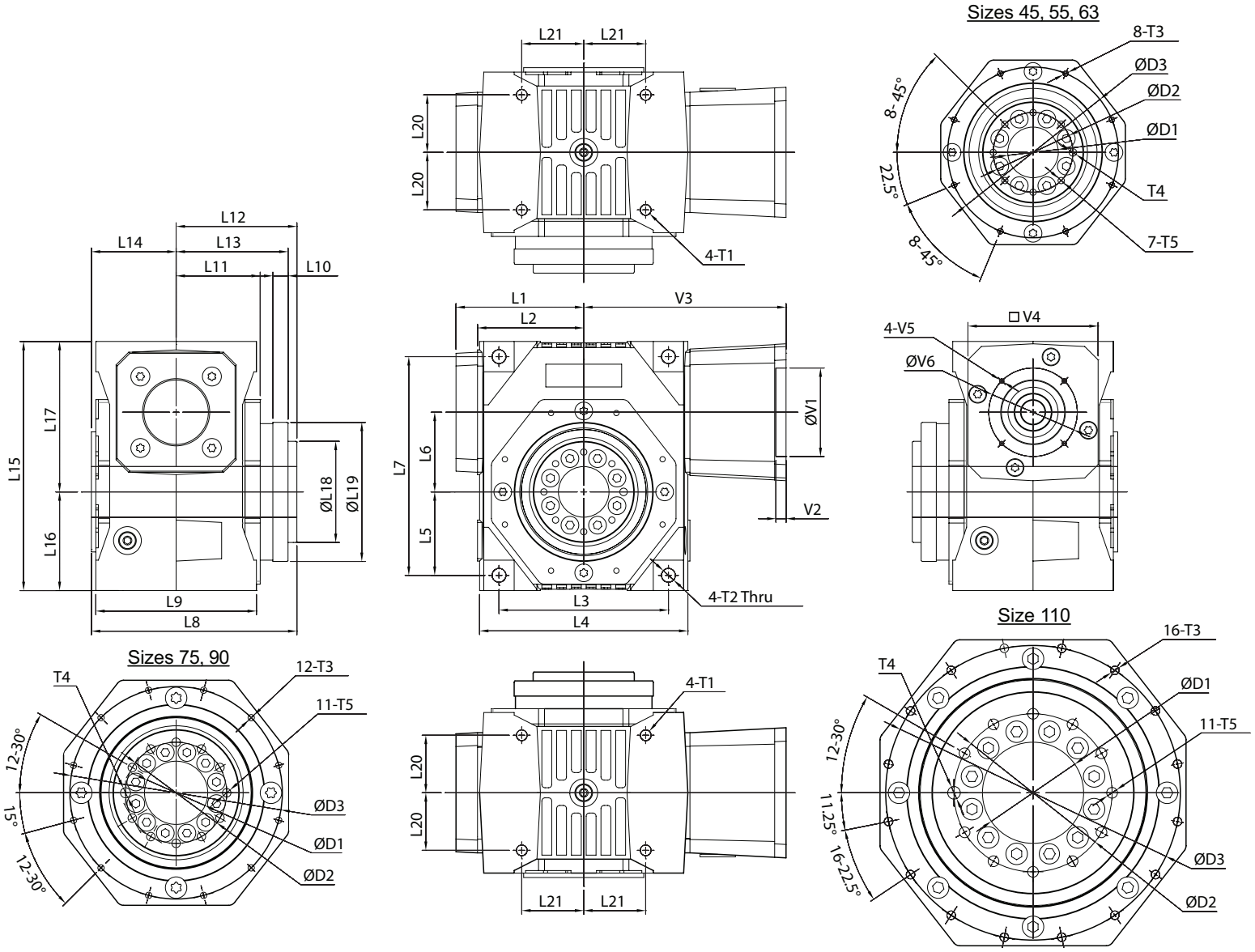

Frame Size	Unit	EJL45	EJL55	EJL63	EJL75	EJL90	EJL110
L1	[mm]	83.5	91.0	101.0	124.0	136.5	152.0
L2	[mm]	67.5	75.0	84.0	104.0	114.5	132.0
L3	[mm]	108	120	134	172	186	220
L4	[mm]	132	146	165	204	225	260
L5	[mm]	53	61	66	82	91	108
L6	[mm]	45	55	63	75	90	110
L7	[mm]	135	155	173	208	234	276
L8	[mm]	133.0	148.5	162.5	195	227	246
L9	[mm]	100	112	127	148	170	182
L10	[mm]	10	12	12	15	18	22
L11	[mm]	54.0	59.0	66.5	79	93	100
L12	[mm]	80.0	89.0	95.5	117	138	150
L13	[mm]	74.0	82.0	88.5	110	129	140
L14	[mm]	53.0	59.5	67.0	78	89	96
L15	[mm]	153	175	197	232	264	306

EJL Dimensions – Robot Flange

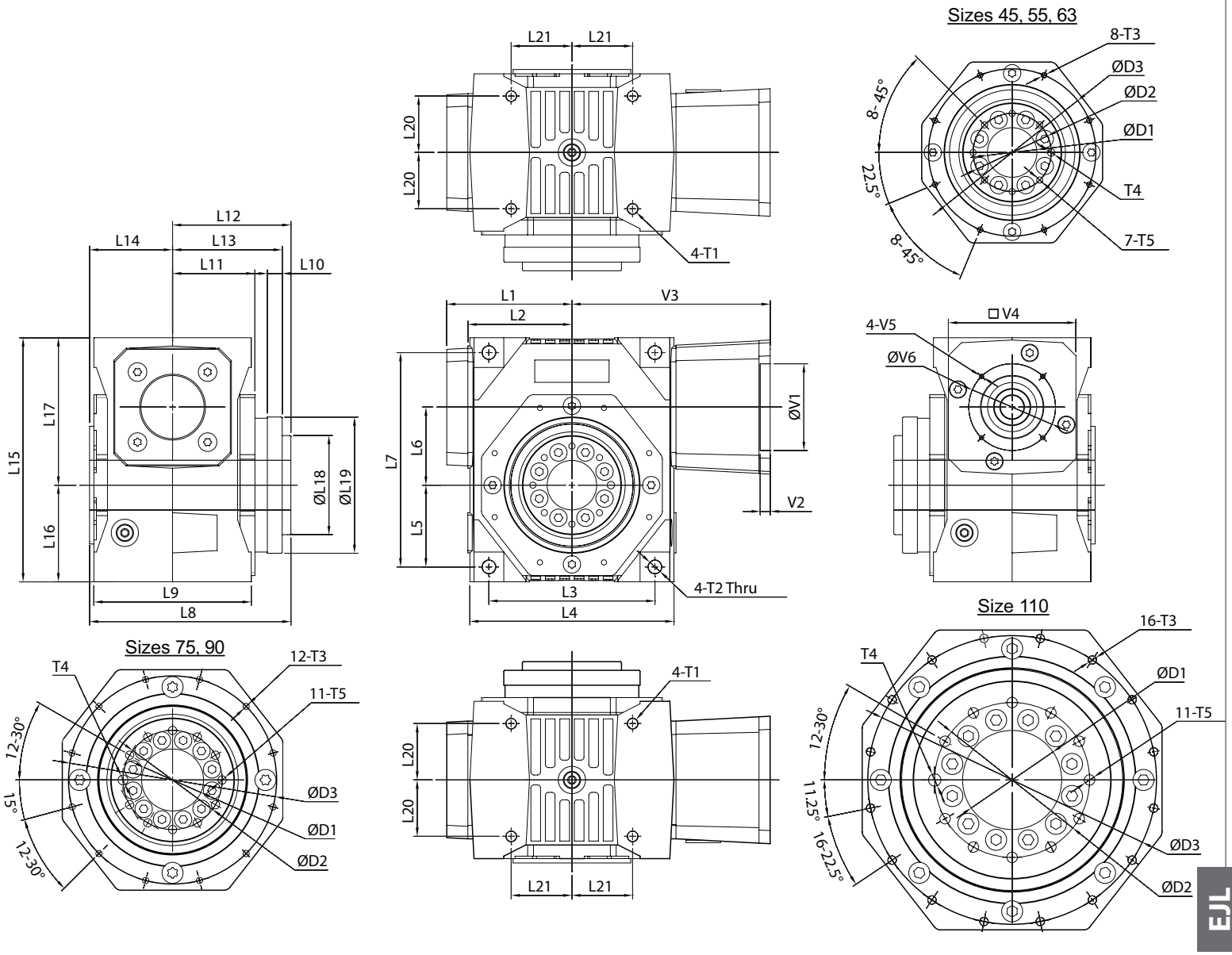

Frame Size	Unit	EJL45	EJL55	EJL63	EJL75	EJL90	EJL110
L16	[mm]	62	71	78	94	106	123
L17	[mm]	91	104	119	138	158	183
L18 (h7)	[mm]	50	63	80	100	125	160
L19 (h7)	[mm]	80	90	110	140	165	200
L20	[mm]	34.0	39.0	45.5	55	65	70
L21	[mm]	40.5	45.0	49.0	68	71	88
D1 (H7)	[mm]	25.0	31.5	40.0	50	63	80
D2	[mm]	40	50	63	80	100	125
D3	[mm]	100	109	135	168	190	233
T1	[mm]	M8	M8	M10	M10	M12	M12
T2	[mm]	9	9	11	11	13	13
T3	[mm]	M5-12 Depth	M5-12 Depth	M5-12 Depth	M6-15 Depth	M8-18 Depth	M8-19 Depth
T4 (H7)	[mm]	6	6	6	8	8	10
T5	[mm]	M6-11 Depth	M6-11 Depth	M6-11 Depth	M8-15 Depth	M8-15 Depth	M10-15 Depth
V1 ~ V6	Motor attachment dimensions are made to fit your servo motor.						

EJH SERIES

With its cast iron housing design, the EJH is a rugged, reliable performer for any dynamic servo application. This product is an ideal fit for machine builders transitioning from mechanical or hydraulic systems to all-electric servo drives. Unlike traditional worm gearboxes out on the market, the EJH utilizes a globoidal gear mesh, resulting in 300% shock load capacity and a quiet, smooth running drive.

With torque capability up to 7800 in. lb. and backlash as low as 6 arc-min, the EJH is well suited for metals, plastics or rubber processing machinery applications requiring a robust, compact solution. Nidec Drive Technology Corporation can customize this product to fit your needs by offering a variety of solid shaft, hollow shaft or shrink disc output mounting options.

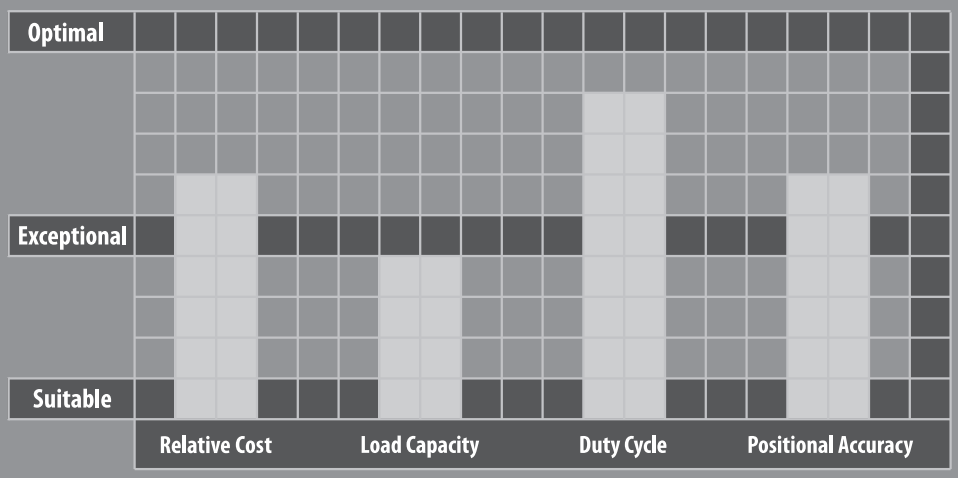

EJH SERIES

- Compact design – exact reduction ratios from 5:1 – 60:1 available in a single stage
- Mid-range performance with backlash as low as 6 arc-min
- Robust cast iron housing design for heavy industry applications
- Five frame sizes to choose from with nominal output torque up to 475Nm

EJH Series Features

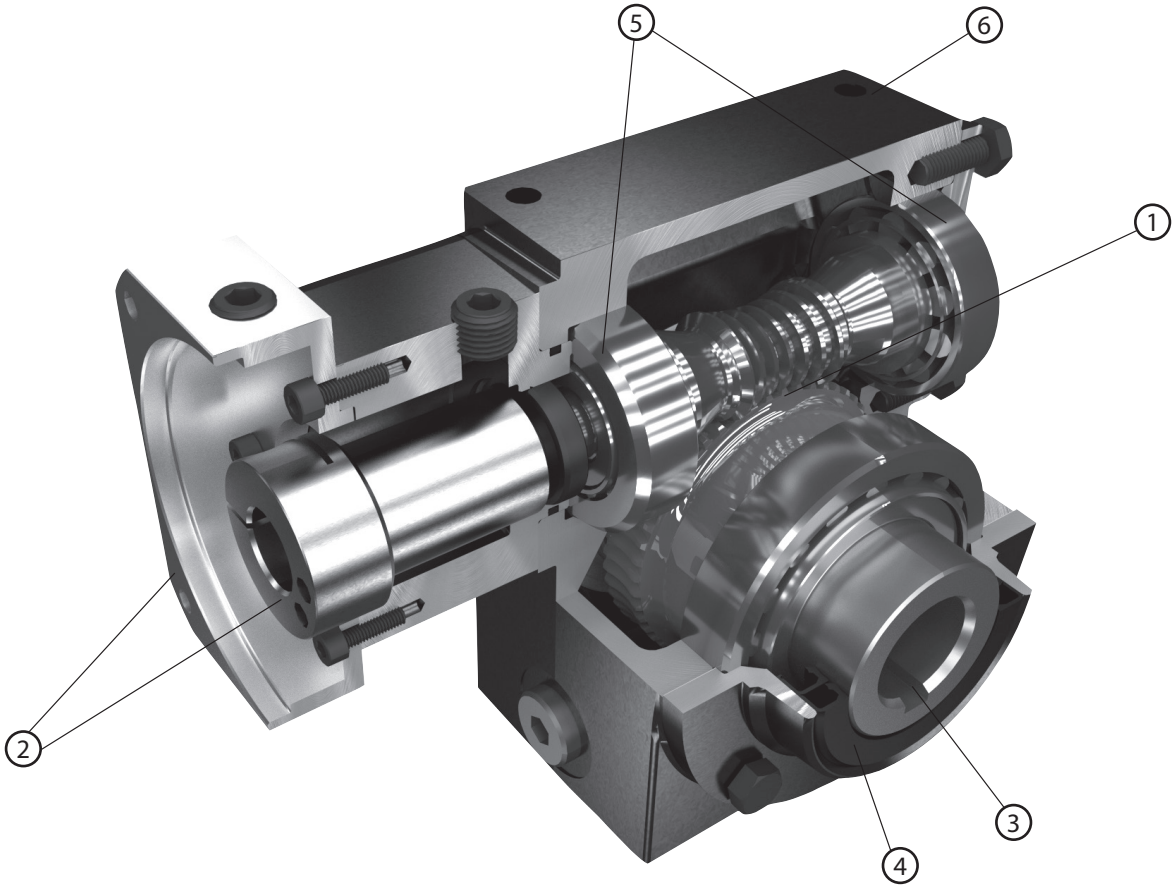

1. Globoidal gear set – between 3-8 teeth in contact at once, allowing 300% shock load capacity
2. Adapter–bushing connection allows simple mounting to virtually any servomotor manufacturer
3. Wide range of output mounting styles available—hollow shaft, solid shaft, flange mount, shrink disc
4. Double oil seal and o-ring provide IP65 protection
5. Tapered roller bearings provide high radial and thrust load capability
6. Cast iron housing for improved durability in heavy industrial applications

EJH Series Model Code

EJH – 015 – 25 – H0 – 0 – 19HB16

- 19HB16: *Motor mounting code
- 0: Backlash:
  - 0: Standard Backlash
  - L: Low Backlash
- H0: Output mounting style:
  - H0: Keyed Hollow Shaft
  - SR: Keyed Solid Shaft Right
  - SL: Keyed Solid Shaft Left
  - SW: Keyed Dual Solid Shaft
  - DR: Hollow Shrink Disc Right
  - DL: Hollow Shrink Disc Left
- 25: Ratio: 5, 6, 7, 8, 9, 10, 15, 20, 25, 30, 40, 50, 60
- 015: Frame size: 015, 020, 025, 030, 035
- EJH: Series

* Motor mounting code varies depending on the motor. Contact us to configure the code.

EJH 015 1-Stage Specifications

Frame Size	**015**								
Ratio	Unit	Note	5	6	7	8	9	10	15
Nominal Output Torque	[Nm]	--	35	---	---	---	---	47	48
Maximum Acceleration Torque	[Nm]	--	46	---	---	---	---	59	61
Emergency Stop Torque	[Nm]	--	183	---	---	---	---	217	216
No Load Running Torque	[Nm]	*1	0.51						
Nominal Input Speed	[rpm]	--	2,000						
Maximum Continuous Input Speed	[rpm]	--	4,000						
Maximum Cyclic Input Speed	[rpm]	--	4,000						
Maximum Radial Load	[N]	*2	3,110						
Maximum Axial Load	[N]	*3	1,780						
Moment of Inertia (≤ Ø14)	[kgcm2]	--	0.75	---	---	---	---	0.59	0.56
Moment of Inertia (≤ Ø19)	[kgcm2]	--	0.95	---	---	---	---	0.79	0.76
Moment of Inertia (≤ Ø28)	[kgcm2]	--	2.13	---	---	---	---	1.97	1.94
Efficiency	[%]	*4	88	---	---	---	---	86	84
Torsional Rigidity	[Nm/arcmin]	--	10.3						
Maximum Torsional Backlash (Standard)	[Arc-min]	--	≤ 32						
Maximum Torsional Backlash (Low)	[Arc-min]	--	≤ 15						
Noise Level	dB [A]	*5	≤ 73						
Ambient Temperature	[°C]	--	-25 ~ 100						
Permitted Housing Temperature	[°C]	--	100						
Protection Class	--	--	IP65						
Lubrication	--	--	Synthetic Oil						
Service Life	[Hours]	--	25,000						
Weight	[kg]	*6	7						

*1) Torque at no load applied to the input shaft at 2,000 rpm

*2) The maximum radial load the gearbox can accept

*3) The maximum axial load the gearbox can accept

*4) The efficiency at the nominal output torque rating

*5) Measured with no load applied to the input shaft at 2,000 rpm

*6) Weight may vary slightly between models

EJH 015 1-Stage Specifications

Frame Size	015							
Ratio	Unit	Note	20	25	30	40	50	60
Nominal Output Torque	[Nm]	--	48	---	46	42	41	38
Maximum Acceleration Torque	[Nm]	--	59	---	57	52	51	48
Emergency Stop Torque	[Nm]	--	209	---	192	148	150	128
No Load Running Torque	[Nm]	*1	0.51					
Nominal Input Speed	[rpm]	--	2,000					
Maximum Continuous Input Speed	[rpm]	--	4,000					
Maximum Cyclic Input Speed	[rpm]	--	4,000					
Maximum Radial Load	[N]	*2	3,110					
Maximum Axial Load	[N]	*3	1,780					
Moment of Inertia (≤ Ø14)	[kgcm2]	--	0.54	---	0.54	0.53	0.53	0.53
Moment of Inertia (≤ Ø19)	[kgcm2]	--	0.74	---	0.74	0.73	0.73	0.73
Moment of Inertia (≤ Ø28)	[kgcm2]	--	1.92	---	1.92	1.91	1.91	1.91
Efficiency	[%]	*4	81	---	76	72	69	66
Torsional Rigidity	[Nm/arcmin]	--	10.3					
Maximum Torsional Backlash (Standard)	[Arc-min]	--	≤ 32					
Maximum Torsional Backlash (Low)	[Arc-min]	--	≤ 15					
Noise Level	dB [A]	*5	≤ 73					
Ambient Temperature	[°C]	--	-25 ~ 100					
Permitted Housing Temperature	[°C]	--	100					
Protection Class	--	--	IP65					
Lubrication	--	--	Synthetic Oil					
Service Life	[Hours]	--	25,000					
Weight	[kg]	*6	7					

*1) Torque at no load applied to the input shaft at 2,000 rpm

*2) The maximum radial load the gearbox can accept

*3) The maximum axial load the gearbox can accept

*4) The efficiency at the nominal output torque rating

*5) Measured with no load applied to the input shaft at 2,000 rpm

*6) Weight may vary slightly between models

EJH 020 1-Stage Specifications

Frame Size	**020**								
Ratio	Unit	Note	5	6	7	8	9	10	15
Nominal Output Torque	[Nm]	--	67	73	78	82	84	86	89
Maximum Acceleration Torque	[Nm]	--	90	99	105	111	113	115	120
Emergency Stop Torque	[Nm]	--	384	407	429	441	441	441	452
No Load Running Torque	[Nm]	*1	1.61						
Nominal Input Speed	[rpm]	--	2,000						
Maximum Continuous Input Speed	[rpm]	--	4,000						
Maximum Cyclic Input Speed	[rpm]	--	4,000						
Maximum Radial Load	[N]	*2	6,670						
Maximum Axial Load	[N]	*3	1,820						
Moment of Inertia (≤ Ø14)	[kgcm2]	--	1.52	1.28	1.14	1.04	0.98	0.94	0.83
Moment of Inertia (≤ Ø19)	[kgcm2]	--	1.72	1.48	1.34	1.24	1.18	1.14	1.03
Moment of Inertia (≤ Ø28)	[kgcm2]	--	2.89	2.66	2.52	2.42	2.36	2.31	2.21
Efficiency	[%]	*4	92	91	91	91	90	90	88
Torsional Rigidity	[Nm/arcmin]	--	17.8						
Maximum Torsional Backlash (Standard)	[Arc-min]	--	≤ 24						
Maximum Torsional Backlash (Low)	[Arc-min]	--	≤ 11						
Noise Level	dB [A]	*5	≤ 75						
Ambient Temperature	[°C]	--	-25 ~ 100						
Permitted Housing Temperature	[°C]	--	100						
Protection Class	--	--	IP65						
Lubrication	--	--	Synthetic Oil						
Service Life	[Hours]	--	25,000						
Weight	[kg]	*6	12						

*1) Torque at no load applied to the input shaft at 2,000 rpm

*2) The maximum radial load the gearbox can accept

*3) The maximum axial load the gearbox can accept

*4) The efficiency at the nominal output torque rating

*5) Measured with no load applied to the input shaft at 2,000 rpm

*6) Weight may vary slightly between models

EJH 020 1-Stage Specifications

Frame Size	020							
Ratio	Unit	Note	20	25	30	40	50	60
Nominal Output Torque	[Nm]	--	89	88	85	81	78	75
Maximum Acceleration Torque	[Nm]	--	116	116	112	106	102	98
Emergency Stop Torque	[Nm]	--	418	418	395	362	305	294
No Load Running Torque	[Nm]	*1	1.61					
Nominal Input Speed	[rpm]	--	2,000					
Maximum Continuous Input Speed	[rpm]	--	4,000					
Maximum Cyclic Input Speed	[rpm]	--	4,000					
Maximum Radial Load	[N]	*2	6,670					
Maximum Axial Load	[N]	*3	1,820					
Moment of Inertia (≤ Ø14)	[kgcm2]	--	0.79	0.77	0.76	0.75	0.75	0.75
Moment of Inertia (≤ Ø19)	[kgcm2]	--	0.99	0.97	0.96	0.95	0.95	0.95
Moment of Inertia (≤ Ø28)	[kgcm2]	--	2.17	2.15	2.14	2.13	2.13	2.13
Efficiency	[%]	*4	85	84	80	76	73	70
Torsional Rigidity	[Nm/arcmin]	--	17.8					
Maximum Torsional Backlash (Standard)	[Arc-min]	--	≤ 24					
Maximum Torsional Backlash (Low)	[Arc-min]	--	≤ 11					
Noise Level	dB [A]	*5	≤ 75					
Ambient Temperature	[°C]	--	-25 ~ 100					
Permitted Housing Temperature	[°C]	--	100					
Protection Class	--	--	IP65					
Lubrication	--	--	Synthetic Oil					
Service Life	[Hours]	--	25,000					
Weight	[kg]	*6	12					

*1) Torque at no load applied to the input shaft at 2,000 rpm

*2) The maximum radial load the gearbox can accept

*3) The maximum axial load the gearbox can accept

*4) The efficiency at the nominal output torque rating

*5) Measured with no load applied to the input shaft at 2,000 rpm

*6) Weight may vary slightly between models

EJH 025 1-Stage Specifications

Frame Size	**025**								
Ratio	Unit	Note	5	6	7	8	9	10	15
Nominal Output Torque	[Nm]	--	120	133	140	148	151	155	161
Maximum Acceleration Torque	[Nm]	--	167	184	194	205	209	214	222
Emergency Stop Torque	[Nm]	--	746	802	825	859	870	881	881
No Load Running Torque	[Nm]	*1	2.72						
Nominal Input Speed	[rpm]	--	2,000						
Maximum Continuous Input Speed	[rpm]	--	4,000						
Maximum Cyclic Input Speed	[rpm]	--	4,000						
Maximum Radial Load	[N]	*2	8,890						
Maximum Axial Load	[N]	*3	1,860						
Moment of Inertia (≤ Ø19)	[kgcm2]	--	5.42	4.66	4.20	3.90	3.69	3.54	3.20
Moment of Inertia (≤ Ø28)	[kgcm2]	--	6.24	5.48	5.02	4.72	4.51	4.36	4.02
Moment of Inertia (≤ Ø38)	[kgcm2]	--	11.8	11.1	10.6	10.3	10.1	9.94	9.60
Efficiency	[%]	*4	92	92	91	91	90	90	88
Torsional Rigidity	[Nm/arcmin]	--	23.1						
Maximum Torsional Backlash (Standard)	[Arc-min]	--	≤ 19						
Maximum Torsional Backlash (Low)	[Arc-min]	--	≤ 9						
Noise Level	dB [A]	*5	≤ 80						
Ambient Temperature	[°C]	--	-25 ~ 100						
Permitted Housing Temperature	[°C]	--	100						
Protection Class	--	--	IP65						
Lubrication	--	--	Synthetic Oil						
Service Life	[Hours]	--	25,000						
Weight	[kg]	*6	20						

*1) Torque at no load applied to the input shaft at 2,000 rpm

*2) The maximum radial load the gearbox can accept

*3) The maximum axial load the gearbox can accept

*4) The efficiency at the nominal output torque rating

*5) Measured with no load applied to the input shaft at 2,000 rpm

*6) Weight may vary slightly between models

EJH 025 1-Stage Specifications

Frame Size	**025**							
Ratio	Unit	Note	20	25	30	40	50	60
Nominal Output Torque	[Nm]	--	159	159	152	145	140	134
Maximum Acceleration Torque	[Nm]	--	217	217	208	198	191	183
Emergency Stop Torque	[Nm]	--	847	791	780	678	621	610
No Load Running Torque	[Nm]	*1	2.72					
Nominal Input Speed	[rpm]	--	2,000					
Maximum Continuous Input Speed	[rpm]	--	4,000					
Maximum Cyclic Input Speed	[rpm]	--	4,000					
Maximum Radial Load	[N]	*2	8,890					
Maximum Axial Load	[N]	*3	1,860					
Moment of Inertia (≤ Ø19)	[kgcm2]	--	3.07	3.02	2.99	2.96	2.94	2.93
Moment of Inertia (≤ Ø28)	[kgcm2]	--	3.89	3.84	3.81	3.78	3.76	3.75
Moment of Inertia (≤ Ø38)	[kgcm2]	--	9.47	9.42	9.39	9.36	9.34	9.33
Efficiency	[%]	*4	85	84	80	76	73	70
Torsional Rigidity	[Nm/arcmin]	--	23.1					
Maximum Torsional Backlash (Standard)	[Arc-min]	--	≤ 19					
Maximum Torsional Backlash (Low)	[Arc-min]	--	≤ 9					
Noise Level	dB [A]	*5	≤ 80					
Ambient Temperature	[°C]	--	-25 ~ 100					
Permitted Housing Temperature	[°C]	--	100					
Protection Class	--	--	IP65					
Lubrication	--	--	Synthetic Oil					
Service Life	[Hours]	--	25,000					
Weight	[kg]	*6	20					

*1) Torque at no load applied to the input shaft at 2,000 rpm

*2) The maximum radial load the gearbox can accept

*3) The maximum axial load the gearbox can accept

*4) The efficiency at the nominal output torque rating

*5) Measured with no load applied to the input shaft at 2,000 rpm

*6) Weight may vary slightly between models

EJH 030 1-Stage Specifications

Frame Size	**030**								
Ratio	Unit	Note	5	6	7	8	9	10	15
Nominal Output Torque	[Nm]	--	196	219	233	248	255	264	275
Maximum Acceleration Torque	[Nm]	--	275	306	324	345	355	367	381
Emergency Stop Torque	[Nm]	--	1,311	1,424	1,480	1,548	1,548	1,559	1,570
No Load Running Torque	[Nm]	*1	3.46						
Nominal Input Speed	[rpm]	--	2,000						
Maximum Continuous Input Speed	[rpm]	--	4,000						
Maximum Cyclic Input Speed	[rpm]	--	4,000						
Maximum Radial Load	[N]	*2	11,110						
Maximum Axial Load	[N]	*3	4,220						
Moment of Inertia (≤ Ø19)	[kgcm2]	--	13.3	11.1	9.80	8.94	8.35	7.92	6.92
Moment of Inertia (≤ Ø28)	[kgcm2]	--	16.2	14.0	12.7	11.8	11.2	10.8	9.78
Moment of Inertia (≤ Ø38)	[kgcm2]	--	19.9	17.7	16.3	15.5	14.9	14.5	13.5
Efficiency	[%]	*4	92	92	91	91	90	89	88
Torsional Rigidity	[Nm/arcmin]	--	41.6						
Maximum Torsional Backlash (Standard)	[Arc-min]	--	≤ 16						
Maximum Torsional Backlash (Low)	[Arc-min]	--	≤ 7						
Noise Level	dB [A]	*5	≤ 80						
Ambient Temperature	[°C]	--	-25 ~ 100						
Permitted Housing Temperature	[°C]	--	100						
Protection Class	--	--	IP65						
Lubrication	--	--	Synthetic Oil						
Service Life	[Hours]	--	25,000						
Weight	[kg]	*6	35						

*1) Torque at no load applied to the input shaft at 2,000 rpm

*2) The maximum radial load the gearbox can accept

*3) The maximum axial load the gearbox can accept

*4) The efficiency at the nominal output torque rating

*5) Measured with no load applied to the input shaft at 2,000 rpm

*6) Weight may vary slightly between models

EJH 030 1-Stage Specifications

Frame Size	**030**							
Ratio	Unit	Note	20	25	30	40	50	60
Nominal Output Torque	[Nm]	--	272	272	260	248	239	230
Maximum Acceleration Torque	[Nm]	--	373	373	357	341	328	315
Emergency Stop Torque	[Nm]	--	1,503	1,435	1,390	1,254	1,096	1,085
No Load Running Torque	[Nm]	*1	3.46					
Nominal Input Speed	[rpm]	--	2,000					
Maximum Continuous Input Speed	[rpm]	--	4,000					
Maximum Cyclic Input Speed	[rpm]	--	4,000					
Maximum Radial Load	[N]	*2	11,110					
Maximum Axial Load	[N]	*3	4,220					
Moment of Inertia (≤ Ø19)	[kgcm2]	--	6.57	6.41	6.32	6.24	6.19	6.17
Moment of Inertia (≤ Ø28)	[kgcm2]	--	9.43	9.27	9.18	9.10	9.05	9.03
Moment of Inertia (≤ Ø38)	[kgcm2]	--	13.1	13.0	12.9	12.8	12.7	12.7
Efficiency	[%]	*4	85	84	80	76	73	70
Torsional Rigidity	[Nm/arcmin]	--	41.6					
Maximum Torsional Backlash (Standard)	[Arc-min]	--	≤ 16					
Maximum Torsional Backlash (Low)	[Arc-min]	--	≤ 7					
Noise Level	dB [A]	*5	≤ 80					
Ambient Temperature	[°C]	--	-25 ~ 100					
Permitted Housing Temperature	[°C]	--	100					
Protection Class	--	--	IP65					
Lubrication	--	--	Synthetic Oil					
Service Life	[Hours]	--	25,000					
Weight	[kg]	*6	35					

*1) Torque at no load applied to the input shaft at 2,000 rpm

*2) The maximum radial load the gearbox can accept

*3) The maximum axial load the gearbox can accept

*4) The efficiency at the nominal output torque rating

*5) Measured with no load applied to the input shaft at 2,000 rpm

*6) Weight may vary slightly between models

EJH 035 1-Stage Specifications

Frame Size	**035**								
Ratio	Unit	Note	5	6	7	8	9	10	15
Nominal Output Torque	[Nm]	--	341	381	404	430	442	456	475
Maximum Acceleration Torque	[Nm]	--	480	537	568	604	619	638	663
Emergency Stop Torque	[Nm]	--	2,423	2,644	2,731	2,845	2,864	2,889	2,885
No Load Running Torque	[Nm]	*1	4.20						
Nominal Input Speed	[rpm]	--	2,000						
Maximum Continuous Input Speed	[rpm]	--	4,000						
Maximum Cyclic Input Speed	[rpm]	--	4,000						
Maximum Radial Load	[N]	*2	15,560						
Maximum Axial Load	[N]	*3	4,000						
Moment of Inertia (≤ Ø19)	[kgcm2]	--	28.3	23.9	21.2	19.5	18.3	17.4	15.4
Moment of Inertia (≤ Ø28)	[kgcm2]	--	32.3	27.8	25.2	23.4	22.2	21.4	19.4
Moment of Inertia (≤ Ø38)	[kgcm2]	--	36.9	32.5	29.8	28.1	26.9	26.0	24.0
Efficiency	[%]	*4	91	91	91	90	90	89	87
Torsional Rigidity	[Nm/arcmin]	--	79.2						
Maximum Torsional Backlash (Standard)	[Arc-min]	--	≤ 15						
Maximum Torsional Backlash (Low)	[Arc-min]	--	≤ 6						
Noise Level	dB [A]	*5	≤ 83						
Ambient Temperature	[°C]	--	-25 ~ 100						
Permitted Housing Temperature	[°C]	--	100						
Protection Class	--	--	IP65						
Lubrication	--	--	Synthetic Oil						
Service Life	[Hours]	--	25,000						
Weight	[kg]	*6	53						

*1) Torque at no load applied to the input shaft at 2,000 rpm

*2) The maximum radial load the gearbox can accept

*3) The maximum axial load the gearbox can accept

*4) The efficiency at the nominal output torque rating

*5) Measured with no load applied to the input shaft at 2,000 rpm

*6) Weight may vary slightly between models

EJH 035 1-Stage Specifications

Frame Size	**035**							
Ratio	Unit	Note	20	25	30	40	50	60
Nominal Output Torque	[Nm]	--	471	468	450	429	413	397
Maximum Acceleration Torque	[Nm]	--	649	649	622	593	571	548
Emergency Stop Torque	[Nm]	--	2,819	2,691	2,570	2,293	2,076	2,037
No Load Running Torque	[Nm]	*1	4.20					
Nominal Input Speed	[rpm]	--	2,000					
Maximum Continuous Input Speed	[rpm]	--	4,000					
Maximum Cyclic Input Speed	[rpm]	--	4,000					
Maximum Radial Load	[N]	*2	15,560					
Maximum Axial Load	[N]	*3	4,000					
Moment of Inertia (≤ Ø19)	[kgcm2]	--	14.7	14.4	14.2	14.0	13.9	13.9
Moment of Inertia (≤ Ø28)	[kgcm2]	--	18.7	18.3	18.1	18.0	17.9	17.8
Moment of Inertia (≤ Ø38)	[kgcm2]	--	23.3	23.0	22.8	22.6	22.5	22.5
Efficiency	[%]	*4	84	83	79	75	72	69
Torsional Rigidity	[Nm/arcmin]	--	79.2					
Maximum Torsional Backlash (Standard)	[Arc-min]	--	≤ 15					
Maximum Torsional Backlash (Low)	[Arc-min]	--	≤ 6					
Noise Level	dB [A]	*5	≤ 83					
Ambient Temperature	[°C]	--	-25 ~ 100					
Permitted Housing Temperature	[°C]	--	100					
Protection Class	--	--	IP65					
Lubrication	--	--	Synthetic Oil					
Service Life	[Hours]	--	25,000					
Weight	[kg]	*6	53					

*1) Torque at no load applied to the input shaft at 2,000 rpm

*2) The maximum radial load the gearbox can accept

*3) The maximum axial load the gearbox can accept

*4) The efficiency at the nominal output torque rating

*5) Measured with no load applied to the input shaft at 2,000 rpm

*6) Weight may vary slightly between models

EJH Dimensions – Hollow Output Shaft

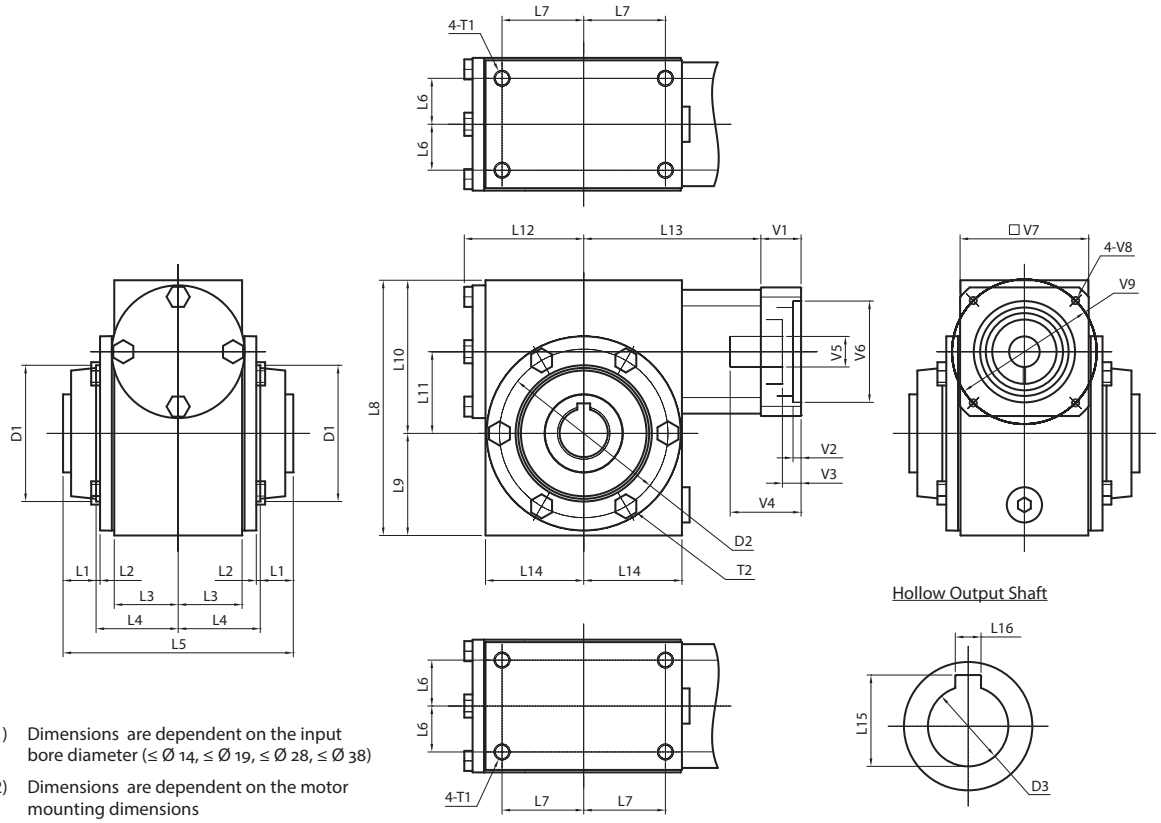

*1) Dimensions are dependent on the input bore diameter (≤ Ø 14, ≤ Ø 19, ≤ Ø 28, ≤ Ø 38)

*2) Dimensions are dependent on the motor mounting dimensions

Frame Size	Unit	Note	EJH-015	EJH-020	EJH-025	EJH-030	EJH-035
L1	[mm]	--	6.5	15.5	13.5	21.5	15
L2	[mm]	--	3.5	2.5	3	3.5	5
L3	[mm]	--	42	40	49	65	87
L4	[mm]	--	52.5	51	60.5	78.5	102
L5	[mm]	--	118	134	148	200	234
L6	[mm]	--	33.5	28.5	38	49	71.5
L7	[mm]	--	36.5	51	65	81	97
L8	[mm]	--	121	159	191	230	262
L9	[mm]	--	41.5	63.5	76	92	108
L10	[mm]	--	79.5	95.5	115	138	154
L11	[mm]	--	38.1	50.8	63.5	76.2	88.9
L12	[mm]	--	55	73	93	115	131
L13	[mm]	*1	95.5 - 105.5	113.5 - 123.5	137.5 - 149.5	156 - 168	174.5 - 186.5
L14	[mm]	--	45	61	79	98	113
L15	[mm]	--	28.5	33.5	38.5	49	64.5
L16	[mm]	--	8	8	10	14	18
D1 ±0.03	[mm]	--	ø63.45	ø84.73	ø107.11	ø135.69	ø134.26
D2	[mm]	--	ø79.5	ø105	ø125.5	ø155.5	ø184
D3 (H7)	[mm]	--	ø25	ø30	ø35	ø45	ø60
T1	[mm]	--	4xM8x12	4xM10x15	4xM10x15	4xM12x18	4xM12x18
T2	[mm]	--	4xM6 Bolts	4xM8 Bolts	8xM8 Bolts	6xM10 Bolts	6xM10 Bolts
V1 ~ V9	[mm]	*2	Motor attachment dimensions are made to fit your servo motor.				

EJH Dimensions – Solid Output Shaft

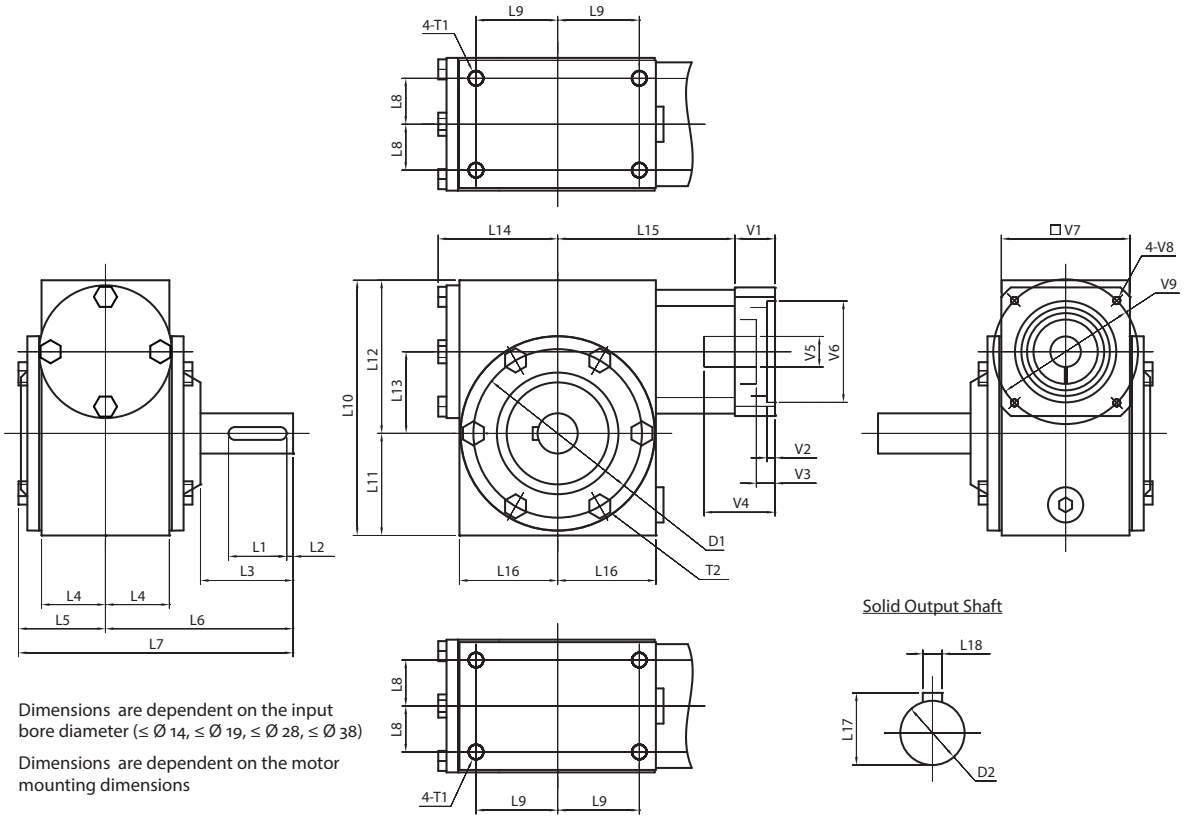

*1) Dimensions are dependent on the input bore diameter (≤ Ø 14, ≤ Ø 19, ≤ Ø 28, ≤ Ø 38)

*2) Dimensions are dependent on the motor mounting dimensions

Frame Size	Unit	Note	EJH-015	EJH-020	EJH-025	EJH-030	EJH-035
L1	[mm]	--	22	36	40	50	63
L2	[mm]	--	4	4	3	3	5
L3	[mm]	--	32.5	57.5	55	85.5	97.5
L4	[mm]	--	42	40	49	65	87
L5	[mm]	--	53	54.5	65.5	84	106.5
L6	[mm]	--	89	117.5	121.5	168.5	209.5
L7	[mm]	--	142	172	187	252.5	316
L8	[mm]	--	33.5	28.5	38	49	71.5
L9	[mm]	--	36.5	51	65	81	97
L10	[mm]	--	121	159	191	230	262
L11	[mm]	--	41.5	63.5	76	92	108
L12	[mm]	--	79.5	95.5	115	138	154
L13	[mm]	--	38.1	50.8	63.5	76.2	88.9
L14	[mm]	--	55	73	93	115	131
L15	[mm]	*1	95.5 - 105.5	113.5 - 123.5	137.5 - 149.5	156 - 168	174.5 - 186.5
L16	[mm]	--	45	61	79	98	113
L17	[mm]	--	22.5	28	33	41	48.5
L18	[mm]	--	6	8	8	10	14
D1	[mm]	--	ø79.5	ø105	ø125.5	ø155.5	ø184
D2 (k6)	[mm]	--	ø20	ø25	ø30	ø38	ø45
T1	[mm]	--	4xM8x12	4xM10x15	4xM10x15	4xM12x18	4xM12x18
T2	[mm]	--	4xM6 Bolts	4xM8 Bolts	8xM8 Bolts	6xM10 Bolts	6xM10 Bolts
V1 ~ V9	[mm]	*2	Motor attachment dimensions are made to fit your servo motor.				

EJH Dimensions – Hollow Output with Shrink Disk

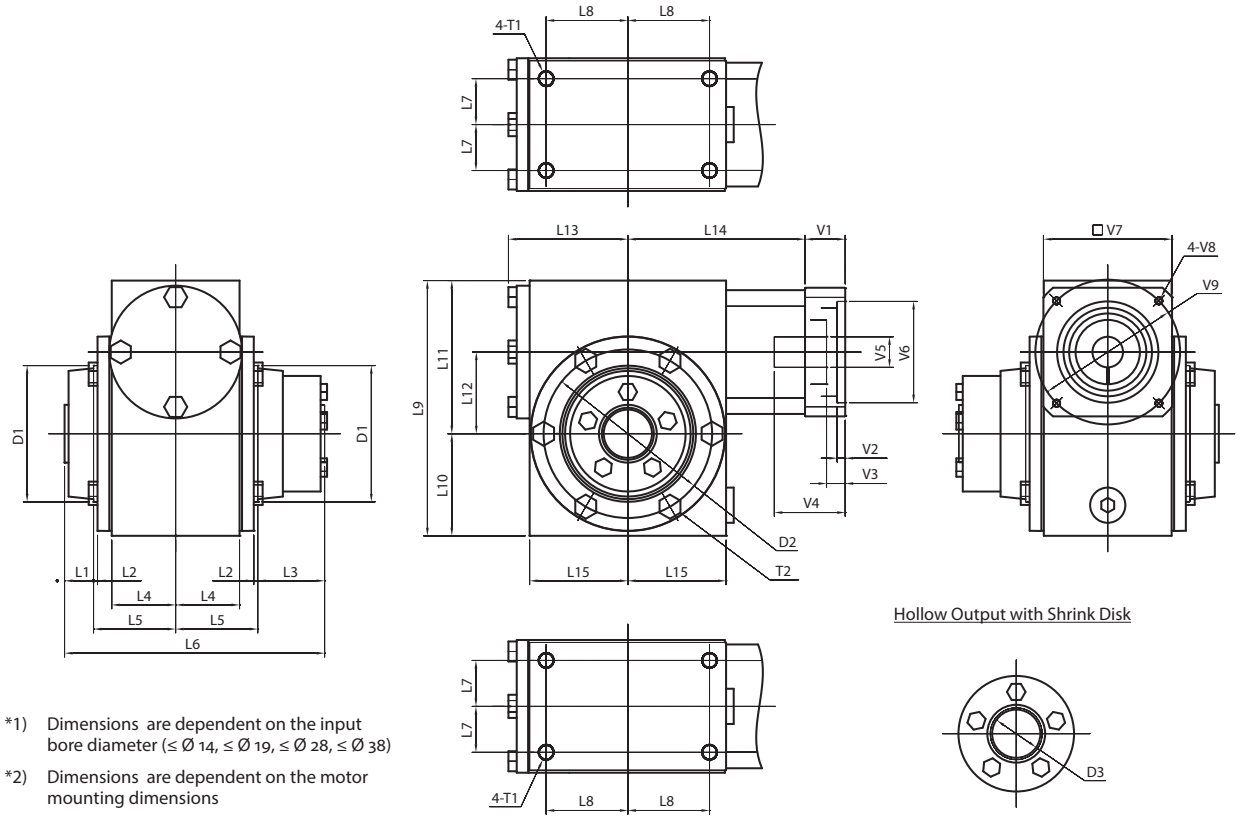

*1) Dimensions are dependent on the input bore diameter (≤ Ø 14, ≤ Ø 19, ≤ Ø 28, ≤ Ø 38)

*2) Dimensions are dependent on the motor mounting dimensions

Frame Size	Unit	Note	EJH-015	EJH-020	EJH-025	EJH-030	EJH-035
L1	[mm]	--	6.5	15.5	13.5	21.5	15
L2	[mm]	--	3.5	2.5	3	3.5	5
L3	[mm]	--	30.5	41.5	48.5	56.5	57
L4	[mm]	--	42	40	49	65	87
L5	[mm]	--	52.5	51	60.5	78.5	101
L6	[mm]	--	141.5	159.5	183	235	271
L7	[mm]	--	33.5	28.5	38	49	71.5
L8	[mm]	--	36.5	51	65	81	97
L9	[mm]	--	121	159	191	230	262
L10	[mm]	--	41.5	63.5	76	92	108
L11	[mm]	--	79.5	95.5	115	138	154
L12	[mm]	--	38.1	50.8	63.5	76.2	88.9
L13	[mm]	--	55	73	93	115	131
L14	[mm]	*1	95.5 - 105.5	113.5 - 123.5	137.5 - 149.5	156 - 168	174.5 - 186.5
L15	[mm]	--	45	61	79	98	113
D1 ±0.03	[mm]	--	ø63.45	ø84.73	ø107.11	ø135.69	ø134.26
D2	[mm]	--	ø79.5	ø105	ø125.5	ø155.5	ø184
D3 (H7)	[mm]	--	ø25	ø30	ø35	ø45	ø60
T1	[mm]	--	4xM8x12	4xM10x15	4xM10x15	4xM12x18	4xM12x18
T2	[mm]	--	4xM6 Bolts	4xM8 Bolts	8xM8 Bolts	6xM10 Bolts	6xM10 Bolts
V1 ~ V9	[mm]	*2	Motor attachment dimensions are made to fit your servo motor.				

EJH Dimensions – Optional Mounting Flange (*1)

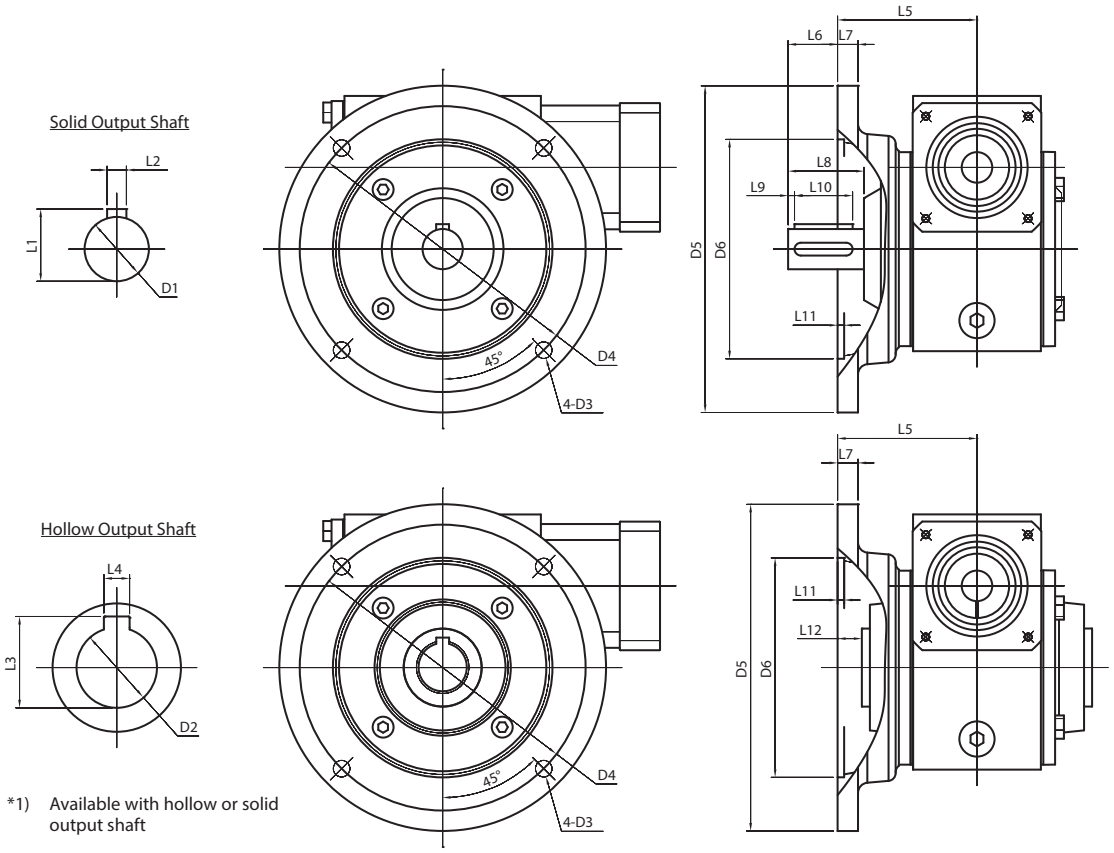

*1) Available with hollow or solid output shaft

Frame Size	Unit	Note	EJH-015	EJH-020	EJH-025	EJH-030	EJH-035
L1	[mm]	--	22.5	28	33	41	48.5
L2	[mm]	--	6	8	8	10	14
L3	[mm]	--	28.5	33.5	38.5	49	64.5
L4	[mm]	--	8	8	10	14	18
L5	[mm]	--	86	87	89	111	129
L6	[mm]	--	2.5	31	32	58	80.5
L7	[mm]	--	10	13	13	13	13
L8	[mm]	--	32.5	57.5	55.0	85.5	97.5
L9	[mm]	--	4	4	3	3	5
L10	[mm]	--	22	36	40	50	63
L11	[mm]	--	4	4	5	7	7
L12	[mm]	--	27.5	20	15.5	10.5	12
D1 (k6)	[mm]	--	ø20	ø25	ø30	ø38	ø45
D2 (H7)	[mm]	--	ø25	ø30	ø35	ø45	ø60
D3	[mm]	--	ø10	ø10	ø12	ø14	ø14
D4	[mm]	--	ø149	ø178	ø210	ø241	ø267
D5	[mm]	--	ø168	ø203	ø235	ø267	ø298
D6 ±0.03	[mm]	--	ø114.30	ø136.55	ø168.30	ø196.88	ø222.28

EJP SERIES

The EJP series is ideal for demanding applications requiring high efficiency, torsional rigidity and zero backlash. It's lightweight, black anodized aluminum housing and dual input/output seals allow for excellent environmental protection with minimal maintenance. The EJP is part of our modular design platform, which means it can be mounted to any servomotor manufacturer with ease.

Our internal design captures both sides of the gear tooth to completely eliminate backlash and guarantee it for the life of the product. Exact reduction ratios allow for simplified servo tuning. Ratios 5:1 through 60:1 are available in a single stage, resulting in a more compact design. The face mounting option gives customers the ability to directly attach components such as tables, pinion gears and timing belt pulleys, eliminating the need for couplings.

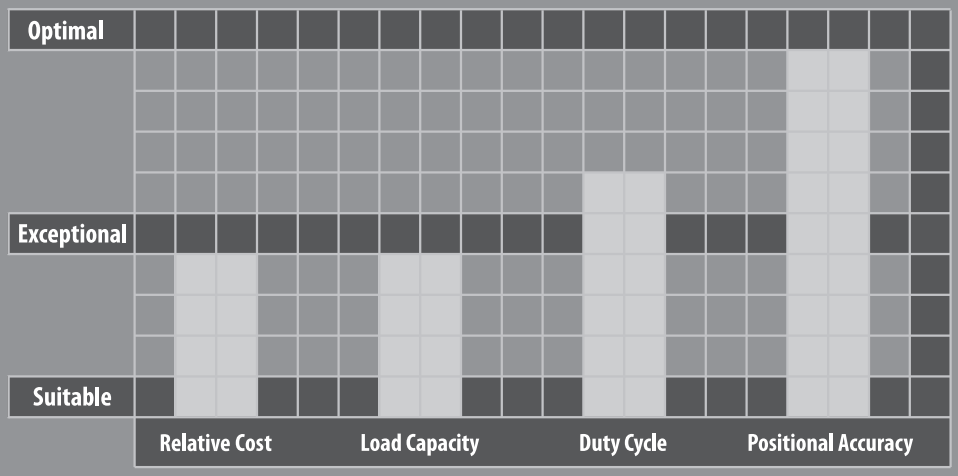

EJP SERIES

- Performance leader in its category
- High positional accuracy and torsional rigidity combined with low noise and exceptionally smooth operation. Zero backlash available
- Wide range of output mounting options
- Compact design – up to 60:1 available in a single stage configuration

EJP Series Features

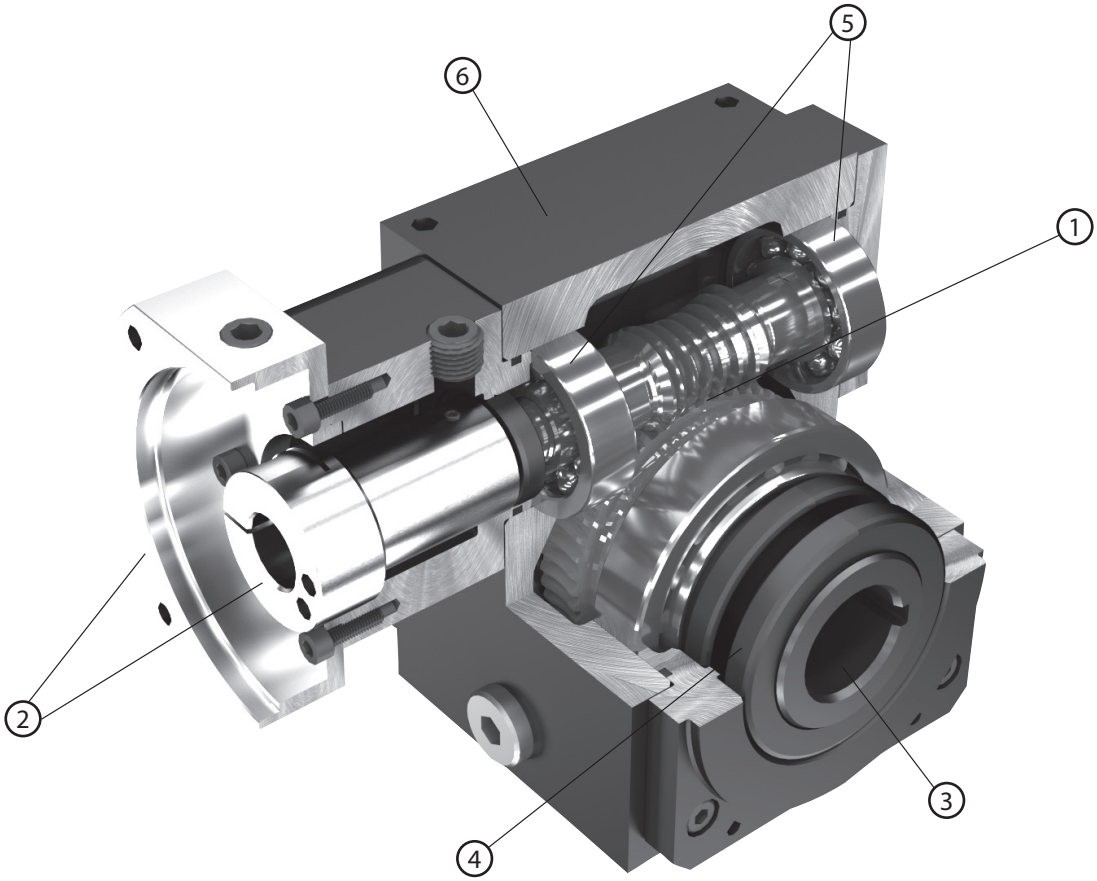

1. Globoidal gear set – between 3-8 teeth in contact at once, allowing 300% shock load capacity
2. Adapter–bushing connection allows simple mounting to virtually any servomotor manufacturer
3. Wide range of output mounting styles available – hollow shaft, solid shaft, face mount, shrink disc
4. Double oil seal and o-ring provide IP65 protection
5. Ball bearings help reduce friction and heat
6. Anodized, thermally efficient aluminum housing

EJP Series Model Code

EJP	–	038	–	25	–	H0	–	0	–	19HB16

- 19HB16: *Motor mounting code
- 0: Backlash: 0: Standard Backlash; Z: Zero Backlash
- H0: Output mounting style:
  - H0: Keyed Hollow Shaft
  - SR: Keyed Solid Shaft Right
  - SL: Keyed Solid Shaft Left
  - SW: Keyed Dual Solid Shaft
  - DR: Hollow Shrink Disc Right
  - DL: Hollow Shrink Disc Left
  - FR: Robot Flange Right
  - FL: Robot Flange Left
- 25: Ratio: 5, 6, 7, 8, 9, 10, 15, 20, 25, 30, 40, 50, 60
- 038: Frame size: 038, 051, 064, 076, 089
- EJP: Series

* Motor mounting code varies depending on the motor. Contact us to configure the code.

EJP 038 1-Stage Specifications

Frame Size	**038**								
Ratio	Unit	Note	5	6	7	8	9	10	15
Nominal Output Torque	[Nm]	--	35	---	---	---	---	46	49
Maximum Acceleration Torque	[Nm]	--	46	---	---	---	---	59	61
Emergency Stop Torque	[Nm]	--	105	---	---	---	---	138	147
No Load Running Torque	[Nm]	*1	0.51						
Nominal Input Speed	[rpm]	--	2,000						
Maximum Continuous Input Speed	[rpm]	--	4,000						
Maximum Cyclic Input Speed	[rpm]	--	6,000						
Maximum Radial Load	[N]	*2	3,110						
Maximum Axial Load	[N]	*3	1,780						
Moment of Inertia (≤ Ø14)	[kgcm2]	--	0.75	---	---	---	---	0.59	0.56
Moment of Inertia (≤ Ø19)	[kgcm2]	--	0.95	---	---	---	---	0.79	0.76
Moment of Inertia (≤ Ø28)	[kgcm2]	--	2.13	---	---	---	---	1.97	1.94
Efficiency	[%]	*4	88	---	---	---	---	86	84
Torsional Rigidity	[Nm/arcmin]	--	3.8						
Maximum Torsional Backlash (Standard)	[Arc-min]	--	≤ 8						
Noise Level	dB [A]	*5	≤ 73						
Ambient Temperature	[°C]	--	-25 ~ 100						
Permitted Housing Temperature	[°C]	--	100						
Protection Class	--	--	IP65						
Lubrication	--	--	Synthetic Oil						
Service Life	[Hours]	--	25,000						
Weight	[kg]	*6	4.1						

*1) Torque at no load applied to the input shaft at 2,000 rpm
*2) The maximum radial load the gearbox can accept
*3) The maximum axial load the gearbox can accept
*4) The efficiency at the nominal output torque rating
*5) Measured with no load applied to the input shaft at 2,000 rpm
*6) Weight may vary slightly between models

EJP 038 1-Stage Specifications

Frame Size	**038**							
Ratio	Unit	Note	20	25	30	40	50	60
Nominal Output Torque	[Nm]	--	47	---	46	42	42	38
Maximum Acceleration Torque	[Nm]	--	60	---	56	52	52	47
Emergency Stop Torque	[Nm]	--	141	---	138	126	126	114
No Load Running Torque	[Nm]	*1	0.51					
Nominal Input Speed	[rpm]	--	2,000					
Maximum Continuous Input Speed	[rpm]	--	4,000					
Maximum Cyclic Input Speed	[rpm]	--	6,000					
Maximum Radial Load	[N]	*2	3,110					
Maximum Axial Load	[N]	*3	1,780					
Moment of Inertia (≤ Ø14)	[kgcm2]	--	0.54	---	0.54	0.53	0.53	0.53
Moment of Inertia (≤ Ø19)	[kgcm2]	--	0.74	---	0.74	0.73	0.73	0.73
Moment of Inertia (≤ Ø28)	[kgcm2]	--	1.92	---	1.92	1.91	1.91	1.91
Efficiency	[%]	*4	81	---	76	72	69	66
Torsional Rigidity	[Nm/arcmin]	--	3.8					
Maximum Torsional Backlash (Standard)	[Arc-min]	--	≤ 8					
Noise Level	dB [A]	*5	≤ 73					
Ambient Temperature	[°C]	--	-25 ~ 100					
Permitted Housing Temperature	[°C]	--	100					
Protection Class	--	--	IP65					
Lubrication	--	--	Synthetic Oil					
Service Life	[Hours]	--	25,000					
Weight	[kg]	*6	4.1					

*1) Torque at no load applied to the input shaft at 2,000 rpm

*2) The maximum radial load the gearbox can accept

*3) The maximum axial load the gearbox can accept

*4) The efficiency at the nominal output torque rating

*5) Measured with no load applied to the input shaft at 2,000 rpm

*6) Weight may vary slightly between models

EJP 051 1-Stage Specifications

Frame Size	**051**								
Ratio	Unit	Note	5	6	7	8	9	10	15
Nominal Output Torque	[Nm]	--	67	75	78	82	85	87	90
Maximum Acceleration Torque	[Nm]	--	90	99	110	110	110	120	120
Emergency Stop Torque	[Nm]	--	201	225	234	246	255	261	270
No Load Running Torque	[Nm]	*1	1.61						
Nominal Input Speed	[rpm]	--	2,000						
Maximum Continuous Input Speed	[rpm]	--	4,000						
Maximum Cyclic Input Speed	[rpm]	--	6,000						
Maximum Radial Load	[N]	*2	6,670						
Maximum Axial Load	[N]	*3	1,820						
Moment of Inertia (≤ Ø14)	[kgcm2]	--	1.52	1.28	1.14	1.04	0.98	0.94	0.83
Moment of Inertia (≤ Ø19)	[kgcm2]	--	1.72	1.48	1.34	1.24	1.18	1.14	1.03
Moment of Inertia (≤ Ø28)	[kgcm2]	--	2.89	2.66	2.52	2.42	2.36	2.31	2.21
Efficiency	[%]	*4	92	91	91	91	90	90	88
Torsional Rigidity	[Nm/arcmin]	--	7.6						
Maximum Torsional Backlash (Standard)	[Arc-min]	--	≤ 6						
Maximum Torsional Backlash (Zero)	[Arc-min]	--	≤ 0						
Noise Level	dB [A]	*5	≤ 75						
Ambient Temperature	[°C]	--	-25 ~ 100						
Permitted Housing Temperature	[°C]	--	100						
Protection Class	--	--	IP65						
Lubrication	--	--	Synthetic Oil						
Service Life	[Hours]	--	25,000						
Weight	[kg]	*6	8.2						

*1) Torque at no load applied to the input shaft at 2,000 rpm

*2) The maximum radial load the gearbox can accept

*3) The maximum axial load the gearbox can accept

*4) The efficiency at the nominal output torque rating

*5) Measured with no load applied to the input shaft at 2,000 rpm

*6) Weight may vary slightly between models

EJP 051 1-Stage Specifications

Frame Size	**051**							
Ratio	Unit	Note	20	25	30	40	50	60
Nominal Output Torque	[Nm]	--	88	89	86	81	78	75
Maximum Acceleration Torque	[Nm]	--	120	120	110	110	100	100
Emergency Stop Torque	[Nm]	--	264	267	258	243	234	225
No Load Running Torque	[Nm]	*1	1.61					
Nominal Input Speed	[rpm]	--	2,000					
Maximum Continuous Input Speed	[rpm]	--	4,000					
Maximum Cyclic Input Speed	[rpm]	--	6,000					
Maximum Radial Load	[N]	*2	6,670					
Maximum Axial Load	[N]	*3	1,820					
Moment of Inertia (≤ Ø14)	[kgcm2]	--	0.79	0.77	0.76	0.75	0.75	0.75
Moment of Inertia (≤ Ø19)	[kgcm2]	--	0.99	0.97	0.96	0.95	0.95	0.95
Moment of Inertia (≤ Ø28)	[kgcm2]	--	2.17	2.15	2.14	2.13	2.13	2.13
Efficiency	[%]	*4	85	84	80	76	73	70
Torsional Rigidity	[Nm/arcmin]	--	7.6					
Maximum Torsional Backlash (Standard)	[Arc-min]	--	≤ 6					
Maximum Torsional Backlash (Zero)	[Arc-min]	--	≤ 0					
Noise Level	dB [A]	*5	≤ 75					
Ambient Temperature	[°C]	--	-25 ~ 100					
Permitted Housing Temperature	[°C]	--	100					
Protection Class	--	--	IP65					
Lubrication	--	--	Synthetic Oil					
Service Life	[Hours]	--	25,000					
Weight	[kg]	*6	8.2					

*1) Torque at no load applied to the input shaft at 2,000 rpm
*2) The maximum radial load the gearbox can accept
*3) The maximum axial load the gearbox can accept
*4) The efficiency at the nominal output torque rating
*5) Measured with no load applied to the input shaft at 2,000 rpm
*6) Weight may vary slightly between models

EJP 064 1-Stage Specifications

Frame Size	**064**								
Ratio	Unit	Note	5	6	7	8	9	10	15
Nominal Output Torque	[Nm]	--	120	180	140	150	150	150	160
Maximum Acceleration Torque	[Nm]	--	170	180	190	210	210	210	220
Emergency Stop Torque	[Nm]	--	360	540	420	450	450	450	480
No Load Running Torque	[Nm]	*1	2.72						
Nominal Input Speed	[rpm]	--	2,000						
Maximum Continuous Input Speed	[rpm]	--	4,000						
Maximum Cyclic Input Speed	[rpm]	--	6,000						
Maximum Radial Load	[N]	*2	8,890						
Maximum Axial Load	[N]	*3	1,860						
Moment of Inertia (≤ Ø19)	[kgcm2]	--	5.42	4.66	4.20	3.90	3.69	3.54	3.20
Moment of Inertia (≤ Ø28)	[kgcm2]	--	6.24	5.48	5.02	4.72	4.51	4.36	4.02
Moment of Inertia (≤ Ø38)	[kgcm2]	--	11.8	11.1	10.6	10.3	10.1	9.94	9.60
Efficiency	[%]	*4	92	92	91	91	90	90	88
Torsional Rigidity	[Nm/arcmin]	--	17.5						
Maximum Torsional Backlash (Standard)	[Arc-min]	--	≤ 5						
Maximum Torsional Backlash (Zero)	[Arc-min]	--	≤ 0						
Noise Level	dB [A]	*5	≤ 80						
Ambient Temperature	[°C]	--	-25 ~ 100						
Permitted Housing Temperature	[°C]	--	100						
Protection Class	--	--	IP65						
Lubrication	--	--	Synthetic Oil						
Service Life	[Hours]	--	25,000						
Weight	[kg]	*6	15						

*1) Torque at no load applied to the input shaft at 2,000 rpm

*2) The maximum radial load the gearbox can accept

*3) The maximum axial load the gearbox can accept

*4) The efficiency at the nominal output torque rating

*5) Measured with no load applied to the input shaft at 2,000 rpm

*6) Weight may vary slightly between models

EJP 064 1-Stage Specifications

Frame Size	**064**							
Ratio	Unit	Note	20	25	30	40	50	60
Nominal Output Torque	[Nm]	--	160	160	150	150	140	130
Maximum Acceleration Torque	[Nm]	--	220	220	210	200	190	180
Emergency Stop Torque	[Nm]	--	480	480	450	450	420	390
No Load Running Torque	[Nm]	*1	2.72					
Nominal Input Speed	[rpm]	--	2,000					
Maximum Continuous Input Speed	[rpm]	--	4,000					
Maximum Cyclic Input Speed	[rpm]	--	6,000					
Maximum Radial Load	[N]	*2	8,890					
Maximum Axial Load	[N]	*3	1,860					
Moment of Inertia (≤ Ø19)	[kgcm2]	--	3.07	3.02	2.99	2.96	2.94	2.93
Moment of Inertia (≤ Ø28)	[kgcm2]	--	3.89	3.84	3.81	3.78	3.76	3.75
Moment of Inertia (≤ Ø38)	[kgcm2]	--	9.47	9.42	9.39	9.36	9.34	9.33
Efficiency	[%]	*4	85	84	80	76	73	70
Torsional Rigidity	[Nm/arcmin]	--	17.5					
Maximum Torsional Backlash (Standard)	[Arc-min]	--	≤ 5					
Maximum Torsional Backlash (Zero)	[Arc-min]	--	≤ 0					
Noise Level	dB [A]	*5	≤ 80					
Ambient Temperature	[°C]	--	-25 ~ 100					
Permitted Housing Temperature	[°C]	--	100					
Protection Class	--	--	IP65					
Lubrication	--	--	Synthetic Oil					
Service Life	[Hours]	--	25,000					
Weight	[kg]	*6	15					

*1) Torque at no load applied to the input shaft at 2,000 rpm

*2) The maximum radial load the gearbox can accept

*3) The maximum axial load the gearbox can accept

*4) The efficiency at the nominal output torque rating

*5) Measured with no load applied to the input shaft at 2,000 rpm

*6) Weight may vary slightly between models

EJP 076 1-Stage Specifications

Frame Size	**076**								
Ratio	Unit	Note	5	6	7	8	9	10	15
Nominal Output Torque	[Nm]	--	200	220	230	250	260	260	270
Maximum Acceleration Torque	[Nm]	--	270	310	320	340	350	370	380
Emergency Stop Torque	[Nm]	--	600	660	690	750	780	780	810
No Load Running Torque	[Nm]	*1	3.46						
Nominal Input Speed	[rpm]	--	2,000						
Maximum Continuous Input Speed	[rpm]	--	4,000						
Maximum Cyclic Input Speed	[rpm]	--	6,000						
Maximum Radial Load	[N]	*2	11,110						
Maximum Axial Load	[N]	*3	4,220						
Moment of Inertia (≤ Ø19)	[kgcm2]	--	13.3	11.1	9.8	8.94	8.35	7.92	6.92
Moment of Inertia (≤ Ø28)	[kgcm2]	--	16.2	14.0	12.7	11.8	11.2	10.8	9.78
Moment of Inertia (≤ Ø38)	[kgcm2]	--	19.9	17.7	16.3	15.5	14.9	14.5	13.5
Efficiency	[%]	*4	92	92	91	91	90	89	88
Torsional Rigidity	[Nm/arcmin]	--	38.5						
Maximum Torsional Backlash (Standard)	[Arc-min]	--	≤ 4						
Maximum Torsional Backlash (Zero)	[Arc-min]	--	≤ 0						
Noise Level	dB [A]	*5	≤ 80						
Ambient Temperature	[°C]	--	-25 ~ 100						
Permitted Housing Temperature	[°C]	--	100						
Protection Class	--	--	IP65						
Lubrication	--	--	Synthetic Oil						
Service Life	[Hours]	--	25,000						
Weight	[kg]	*6	25						

*1) Torque at no load applied to the input shaft at 2,000 rpm

*2) The maximum radial load the gearbox can accept

*3) The maximum axial load the gearbox can accept

*4) The efficiency at the nominal output torque rating

*5) Measured with no load applied to the input shaft at 2,000 rpm

*6) Weight may vary slightly between models

EJP 076 1-Stage Specifications

Frame Size	**076**							
Ratio	Unit	Note	20	25	30	40	50	60
Nominal Output Torque	[Nm]	--	270	270	260	250	240	230
Maximum Acceleration Torque	[Nm]	--	370	370	360	340	330	320
Emergency Stop Torque	[Nm]	--	810	810	780	750	720	690
No Load Running Torque	[Nm]	*1	3.46					
Nominal Input Speed	[rpm]	--	2,000					
Maximum Continuous Input Speed	[rpm]	--	4,000					
Maximum Cyclic Input Speed	[rpm]	--	6,000					
Maximum Radial Load	[N]	*2	11,110					
Maximum Axial Load	[N]	*3	4,220					
Moment of Inertia (≤ Ø19)	[kgcm2]	--	6.57	6.41	6.32	6.24	6.19	6.17
Moment of Inertia (≤ Ø28)	[kgcm2]	--	9.43	9.27	9.18	9.10	9.05	9.03
Moment of Inertia (≤ Ø38)	[kgcm2]	--	13.1	13.0	12.9	12.8	12.7	12.7
Efficiency	[%]	*4	85	84	80	76	73	70
Torsional Rigidity	[Nm/arcmin]	--	38.5					
Maximum Torsional Backlash (Standard)	[Arc-min]	--	≤ 4					
Maximum Torsional Backlash (Zero)	[Arc-min]	--	≤ 0					
Noise Level	dB [A]	*5	≤ 80					
Ambient Temperature	[°C]	--	-25 ~ 100					
Permitted Housing Temperature	[°C]	--	100					
Protection Class	--	--	IP65					
Lubrication	--	--	Synthetic Oil					
Service Life	[Hours]	--	25,000					
Weight	[kg]	*6	25					

*1) Torque at no load applied to the input shaft at 2,000 rpm

*2) The maximum radial load the gearbox can accept

*3) The maximum axial load the gearbox can accept

*4) The efficiency at the nominal output torque rating

*5) Measured with no load applied to the input shaft at 2,000 rpm

*6) Weight may vary slightly between models

EJP 089 1-Stage Specifications

Frame Size	**089**								
Ratio	Unit	Note	5	6	7	8	9	10	15
Nominal Output Torque	[Nm]	--	340	380	400	430	440	460	480
Maximum Acceleration Torque	[Nm]	--	480	540	570	600	620	640	660
Emergency Stop Torque	[Nm]	--	1020	1140	1200	1290	1320	1380	1440
No Load Running Torque	[Nm]	*1	4.20						
Nominal Input Speed	[rpm]	--	2,000						
Maximum Continuous Input Speed	[rpm]	--	4,000						
Maximum Cyclic Input Speed	[rpm]	--	6,000						
Maximum Radial Load	[N]	*2	15,560						
Maximum Axial Load	[N]	*3	4,000						
Moment of Inertia (≤ Ø19)	[kgcm2]	--	28.3	23.9	21.2	19.5	18.3	17.4	15.4
Moment of Inertia (≤ Ø28)	[kgcm2]	--	32.3	27.8	25.2	23.4	22.2	21.4	19.4
Moment of Inertia (≤ Ø38)	[kgcm2]	--	36.9	32.5	29.8	28.1	26.9	26.0	24.0
Efficiency	[%]	*4	91	91	91	90	90	89	87
Torsional Rigidity	[Nm/arcmin]	--	71						
Maximum Torsional Backlash (Standard)	[Arc-min]	--	≤ 3						
Maximum Torsional Backlash (Zero)	[Arc-min]	--	≤ 0						
Noise Level	dB [A]	*5	≤ 83						
Ambient Temperature	[°C]	--	-25 ~ 100						
Permitted Housing Temperature	[°C]	--	100						
Protection Class	--	--	IP65						
Lubrication	--	--	Synthetic Oil						
Service Life	[Hours]	--	25,000						
Weight	[kg]	*6	50						

*1) Torque at no load applied to the input shaft at 2,000 rpm

*2) The maximum radial load the gearbox can accept

*3) The maximum axial load the gearbox can accept

*4) The efficiency at the nominal output torque rating

*5) Measured with no load applied to the input shaft at 2,000 rpm

*6) Weight may vary slightly between models

EJP 089 1-Stage Specifications

Frame Size	**089**							
Ratio	Unit	Note	20	25	30	40	50	60
Nominal Output Torque	[Nm]	--	470	470	450	430	410	400
Maximum Acceleration Torque	[Nm]	--	650	650	620	590	570	550
Emergency Stop Torque	[Nm]	--	1410	1410	1350	1290	1230	1200
No Load Running Torque	[Nm]	*1	4.20					
Nominal Input Speed	[rpm]	--	2,000					
Maximum Continuous Input Speed	[rpm]	--	4,000					
Maximum Cyclic Input Speed	[rpm]	--	6,000					
Maximum Radial Load	[N]	*2	15,560					
Maximum Axial Load	[N]	*3	4,000					
Moment of Inertia (≤ Ø19)	[kgcm2]	--	14.7	14.4	14.2	14.0	13.9	13.9
Moment of Inertia (≤ Ø28)	[kgcm2]	--	18.7	18.3	18.1	18.0	17.9	17.8
Moment of Inertia (≤ Ø38)	[kgcm2]	--	23.3	23.0	22.8	22.6	22.5	22.5
Efficiency	[%]	*4	84	83	79	75	72	69
Torsional Rigidity	[Nm/arcmin]	--	71					
Maximum Torsional Backlash (Standard)	[Arc-min]	--	≤ 3					
Maximum Torsional Backlash (Zero)	[Arc-min]	--	≤ 0					
Noise Level	dB [A]	*5	≤ 83					
Ambient Temperature	[°C]	--	-25 ~ 100					
Permitted Housing Temperature	[°C]	--	100					
Protection Class	--	--	IP65					
Lubrication	--	--	Synthetic Oil					
Service Life	[Hours]	--	25,000					
Weight	[kg]	*6	50					

*1) Torque at no load applied to the input shaft at 2,000 rpm

*2) The maximum radial load the gearbox can accept

*3) The maximum axial load the gearbox can accept

*4) The efficiency at the nominal output torque rating

*5) Measured with no load applied to the input shaft at 2,000 rpm

*6) Weight may vary slightly between models

EJP Dimensions – Hollow Output Shaft

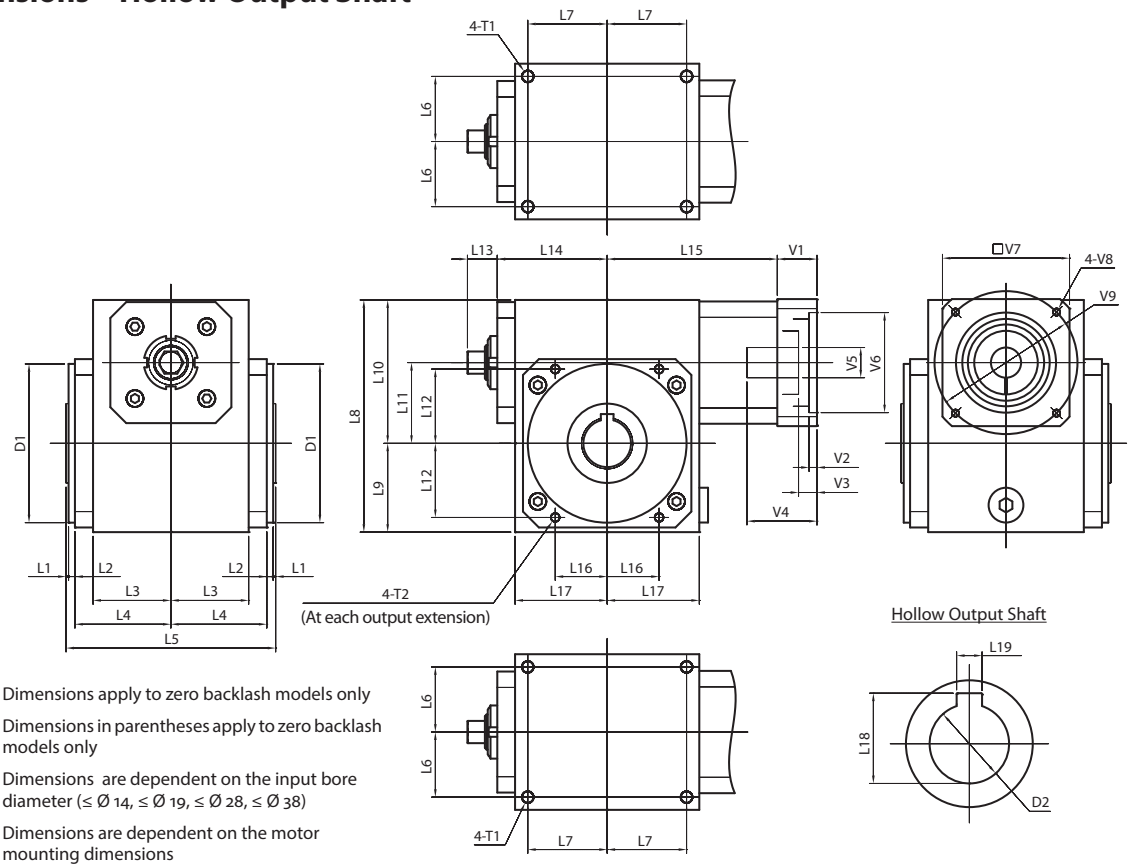

*1) Dimensions apply to zero backlash models only

*2) Dimensions in parentheses apply to zero backlash models only

*3) Dimensions are dependent on the input bore diameter (≤ Ø 14, ≤ Ø 19, ≤ Ø 28, ≤ Ø 38)

*4) Dimensions are dependent on the motor mounting dimensions

Frame Size	Unit	Note	EJP-038	EJP-051	EJP-064	EJP-076	EJP-089
L1	[mm]	--	1	1	1	2	2
L2	[mm]	--	4	4	4	4	4
L3	[mm]	--	39	49	54	73.5	90
L4	[mm]	--	51	60.5	70	94	111.5
L5	[mm]	--	112	132	148	200	234
L6	[mm]	--	32	41	44	63	80
L7	[mm]	--	42	50	68.5	79	95
L8	[mm]	--	118	146.5	181	214	252
L9	[mm]	--	45	56	73	82	100
L10	[mm]	--	73	90.5	108	132	152
L11	[mm]	--	38.1	50.8	63.5	76.2	88.9
L12	[mm]	--	34.5	46.5	57.5	64.5	80.5
L13	[mm]	*1	---	22	22	32	35
L14	[mm]	*2	63	69.5 (71)	94 (96)	110 (111)	125.5 (131)
L15	[mm]	*3	96.5 - 106.5	105 - 115	130.5 - 142.5	151 - 163	165 - 177
L16	[mm]	--	18.5	32.5	40	45.5	46.5
L17	[mm]	--	50.5	58	79	89.5	105
L18	[mm]	--	28.5	33.5	38.5	49.0	64.5
L19	[mm]	--	8	8	10	14	18
D1 (h8)	[mm]	--	ø64	ø100	ø120	ø134	ø145
D2 (H7)	[mm]	--	ø25	ø30	ø35	ø45	ø60
T1	[mm]	--	4xM8x12	4xM8x12	4xM8x12	4xM10x15	4xM10x15
T2	[mm]	--	4xM6x9	4xM6x9	4xM8x12	4xM10x15	4xM10x15
V1 ~ V9	[mm]	*4	Motor attachment dimensions are made to fit your servo motor.				

EJP Dimensions – Solid Output Shaft

*1) Dimensions apply to zero backlash models only

*2) Dimensions in parentheses apply to zero backlash models only

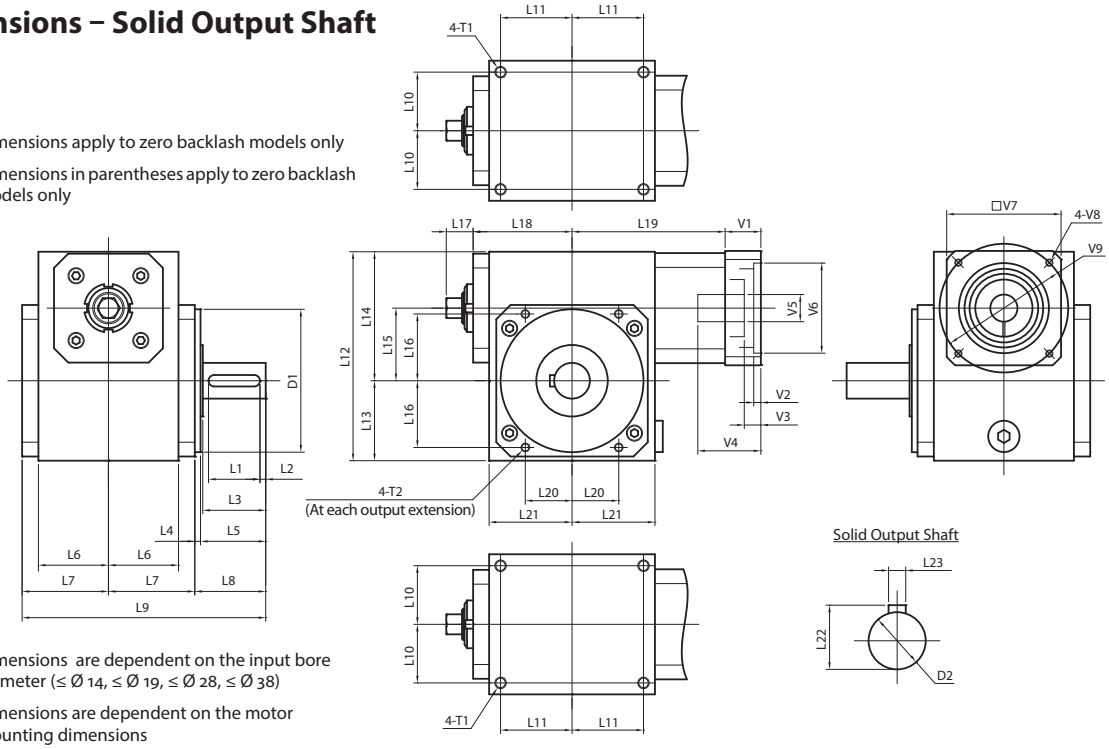

*3) Dimensions are dependent on the input bore diameter (≤ Ø 14, ≤ Ø 19, ≤ Ø 28, ≤ Ø 38)

*4) Dimensions are dependent on the motor mounting dimensions

Frame Size	Unit	Note	EJP-038	EJP-051	EJP-064	EJP-076	EJP-089
L1	[mm]	--	22	36	40	50	63
L2	[mm]	--	90	4	4	5	5
L3	[mm]	--	30	44	50	67	83
L4	[mm]	--	4	4	4	4	4
L5	[mm]	--	31	45.5	51	67	84.5
L6	[mm]	--	39	49	54	73.5	90
L7	[mm]	--	51	60.5	70	94	111
L8	[mm]	--	35	49.5	55	71	88.5
L9	[mm]	--	137	170.5	194	259	311.5
L10	[mm]	--	32	41	44	63	80
L11	[mm]	--	42	50	68.5	79	95
L12	[mm]	--	118	146.5	181	214	252
L13	[mm]	--	45	56	73	82	100
L14	[mm]	--	73	90.5	108	132	152
L15	[mm]	--	38.1	50.8	63.5	76.2	88.9
L16	[mm]	--	34.5	46.5	57.5	64.5	80.5
L17	[mm]	*1	---	22	22	32	35
L18	[mm]	*2	63	69.5 (71)	94 (96)	110 (111)	125.5 (131)
L19	[mm]	*3	96.5 - 106.5	105 - 115	130.5 - 142.5	151 - 163	165 - 177
L20	[mm]	--	18.5	32.5	40	45.5	46.5
L21	[mm]	--	50.5	58	79	89.5	105
L22	[mm]	--	22.5	28	33	38	48.5
L23	[mm]	--	6	8	8	10	14
D1 (h8)	[mm]	--	ø64	ø100	ø120	ø134	ø145
D2 (k6)	[mm]	--	ø20	ø25	ø30	ø35	ø45
T1	[mm]	--	4xM8x12	4xM8x12	4xM8x12	4xM10x15	4xM10x15
T2	[mm]	--	4xM6x9	4xM6x9	4xM8x12	4xM10x15	4xM10x15
V1 ~ V9	[mm]	*4	Motor attachment dimensions are made to fit your servo motor.				

EJP Dimensions – Flange Output

*1) Dimensions apply to zero backlash models only

*2) Dimensions in parentheses apply to zero backlash models only

*3) Dimensions are dependent on the input bore diameter (≤ Ø 14, ≤ Ø 19, ≤ Ø 28, ≤ Ø 38)

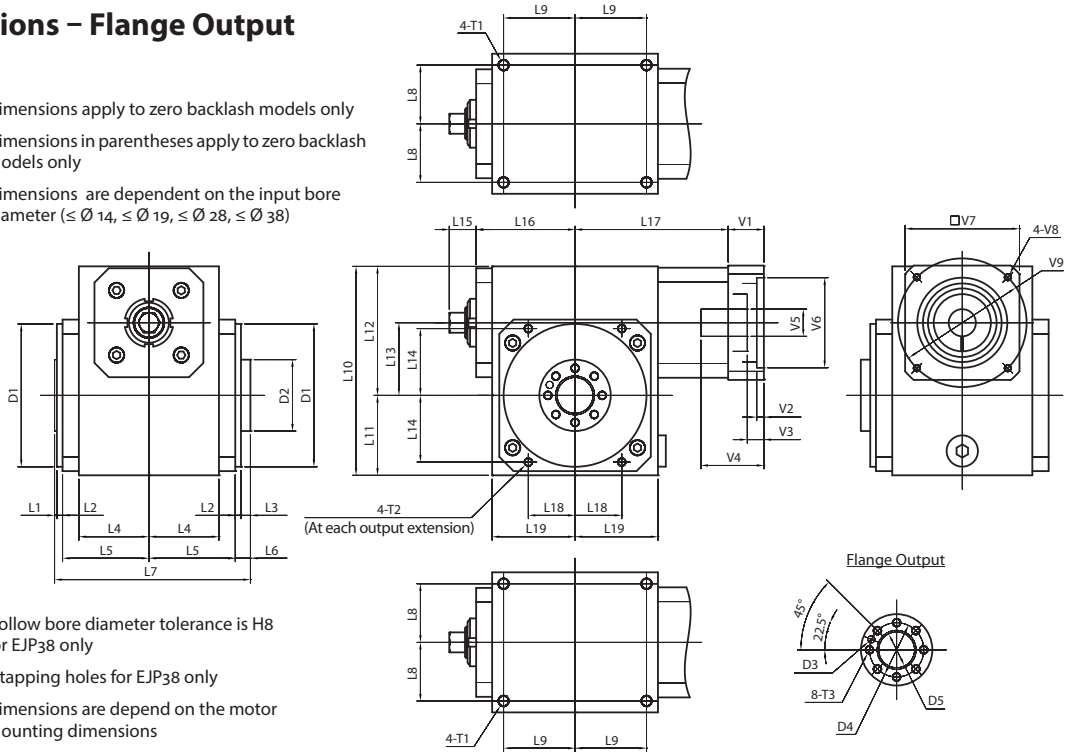

*4) Hollow bore diameter tolerance is H8 for EJP38 only

*5) 4 tapping holes for EJP38 only

*6) Dimensions are depend on the motor mounting dimensions

Frame Size	Unit	Note	EJP-038	EJP-051	EJP-064	EJP-076	EJP-089
L1	[mm]	--	1	1.5	1.5	2	2
L2	[mm]	--	4	4	4	4	4
L3	[mm]	--	6	6.5	6	7	7
L4	[mm]	--	39	49	54	73.5	90
L5	[mm]	--	51	60.5	70	94	111
L6	[mm]	--	10	10.5	10	11	11
L7	[mm]	--	117	137	153	205	239
L8	[mm]	--	32	41	44	63	80
L9	[mm]	--	42	50	68.5	79	95
L10	[mm]	--	118	146.5	181	214	252
L11	[mm]	--	45	56	73	82	100
L12	[mm]	--	73	90.5	108	132	152
L13	[mm]	--	38.1	50.8	63.5	76.2	88.9
L14	[mm]	--	34.5	46.5	57.5	64.5	80.5
L15	[mm]	*1	---	22	22	32	35
L16	[mm]	*2	63	69.5 (71)	94 (96)	110 (111)	125.5 (131)
L17	[mm]	*3	96.5 - 106.5	105 - 115	130.5 - 142.5	151 - 163	165 - 177
L18	[mm]	--	18.5	32.5	40	45.5	46.5
L19	[mm]	--	50.5	58	79	89.5	105
D1 (h8)	[mm]	--	ø64	ø100	ø120	ø134	ø145
D2 (h11)	[mm]	--	ø40	ø50	ø65	ø80	ø90
D3 (H9)	[mm]	--	ø5 x 10	ø5 x 10	ø6 x 10	ø8 x 10	ø8 x 10
D4	[mm]	--	ø28	ø38	ø50	ø60	ø70
D5 (H7)	[mm]	*4	ø16	ø25	ø30	ø35	ø45
T1	[mm]	--	4xM8x12	4xM8x12	4xM8x12	4xM10x15	4xM10x15
T2	[mm]	--	4xM6x9	4xM6x9	4xM8x12	4xM10x15	4xM10x15
T3	[mm]	*5	4xM6x12	8xM6x12	8xM8x16	8xM8x16	8xM10x20
V1 ~ V9	[mm]	*6	Motor attachment dimensions are made to fit your servo motor.				

EJP Dimensions – Hollow Output with Shrink Disk

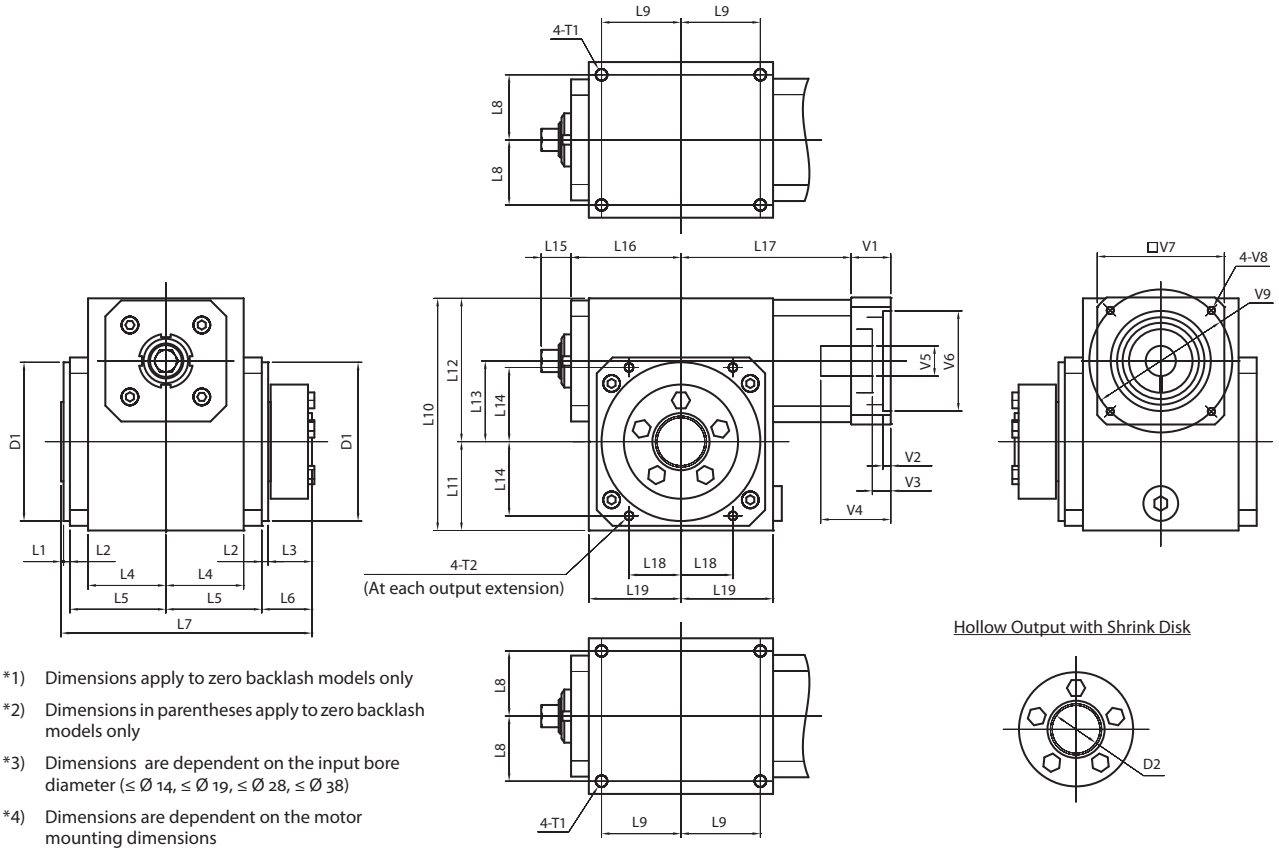

*1) Dimensions apply to zero backlash models only

*2) Dimensions in parentheses apply to zero backlash models only

*3) Dimensions are dependent on the input bore diameter (≤ Ø 14, ≤ Ø 19, ≤ Ø 28, ≤ Ø 38)

*4) Dimensions are dependent on the motor mounting dimensions

Frame Size	Unit	Note	EJP-038	EJP-051	EJP-064	EJP-076	EJP-089
L1	[mm]	--	1	1.5	1.5	2	2
L2	[mm]	--	4	4	4	4	4
L3	[mm]	--	25	27.5	36	37	38.5
L4	[mm]	--	39	49	54	73.5	90
L5	[mm]	--	51	60.5	70	94	111
L6	[mm]	--	29	31.5	40	41	42.5
L7	[mm]	--	136	158	183	235	271
L8	[mm]	--	32	41	44	63	80
L9	[mm]	--	42	50	68.5	79	95
L10	[mm]	--	118	146.5	181	214	252
L11	[mm]	--	45	56	73	82	100
L12	[mm]	--	73	90.5	108	132	152
L13	[mm]	--	38.1	50.8	63.5	76.2	88.9
L14	[mm]	--	34.5	46.5	57.5	64.5	80.5
L15	[mm]	*1	---	22	22	32	35
L16	[mm]	*2	63	69.5 (71)	94 (96)	110 (111)	125.5 (131)
L17	[mm]	*3	96.5 - 106.5	105 - 115	130.5 - 142.5	151 - 163	165 - 177
L18	[mm]	--	18.5	32.5	40	45.5	46.5
L19	[mm]	--	50.5	58	79	89.5	105
D1 (h8)	[mm]	--	ø64	ø100	ø120	ø134	ø145
D2 (H6)	[mm]	--	ø25	ø30	ø35	ø45	ø60
T1	[mm]	--	4xM8x12	4xM8x12	4xM8x12	4xM10x15	4xM10x15
T2	[mm]	--	4xM6x9	4xM6x9	4xM8x12	4xM10x15	4xM10x15
V1 ~ V9	[mm]	*4	Motor attachment dimensions are made to fit your servo motor.				

EJS SERIES

The EJS Series from Nidec Drive Technology Corporation offers features which cannot be found in today's market. Standard adapters are available for easy mounting to both, servo and AC induction motors. Dual bearings on the input shaft ensure proper alignment of the motor and gearbox. This design allows the gearbox to be mounted in any orientation.

Smooth, rounded surfaces help eliminate free-standing water and prevent bacteria growth. IP69K protection combined with 316 stainless steel allows this product to stand up to the harshest production environments. The EJS is the only servo grade right angle gearbox in the market that has been certified 3A, NSF and EHEDG. This product is well suited for applications in meat & poultry, fruits & vegetables, seafood processing, dairy and pharmaceuticals.

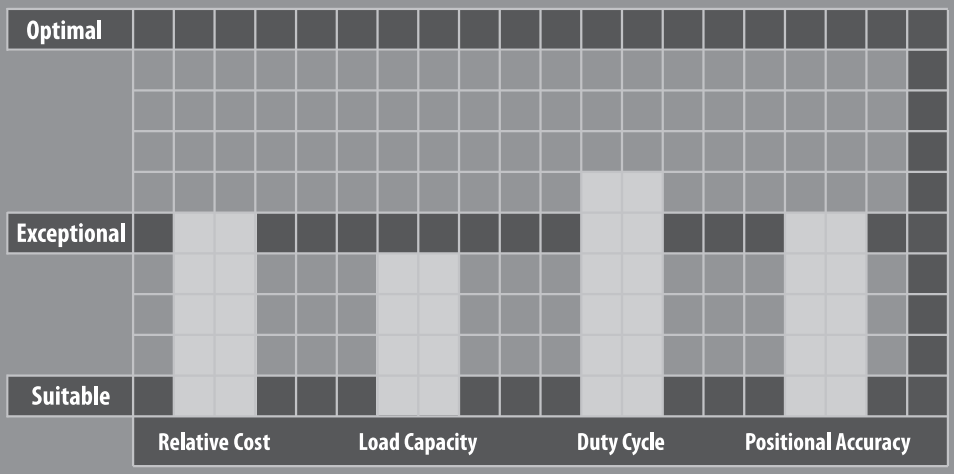

EJS SERIES

- IP69K ingress protection with smooth, rounded 316 stainless housing
- Certified by 3A, NSF and EHEDG
- Easy mounting to stainless steel servo or NEMA motors
- 5 frame sizes with output torque up to 721 Nm

EJS Series Features

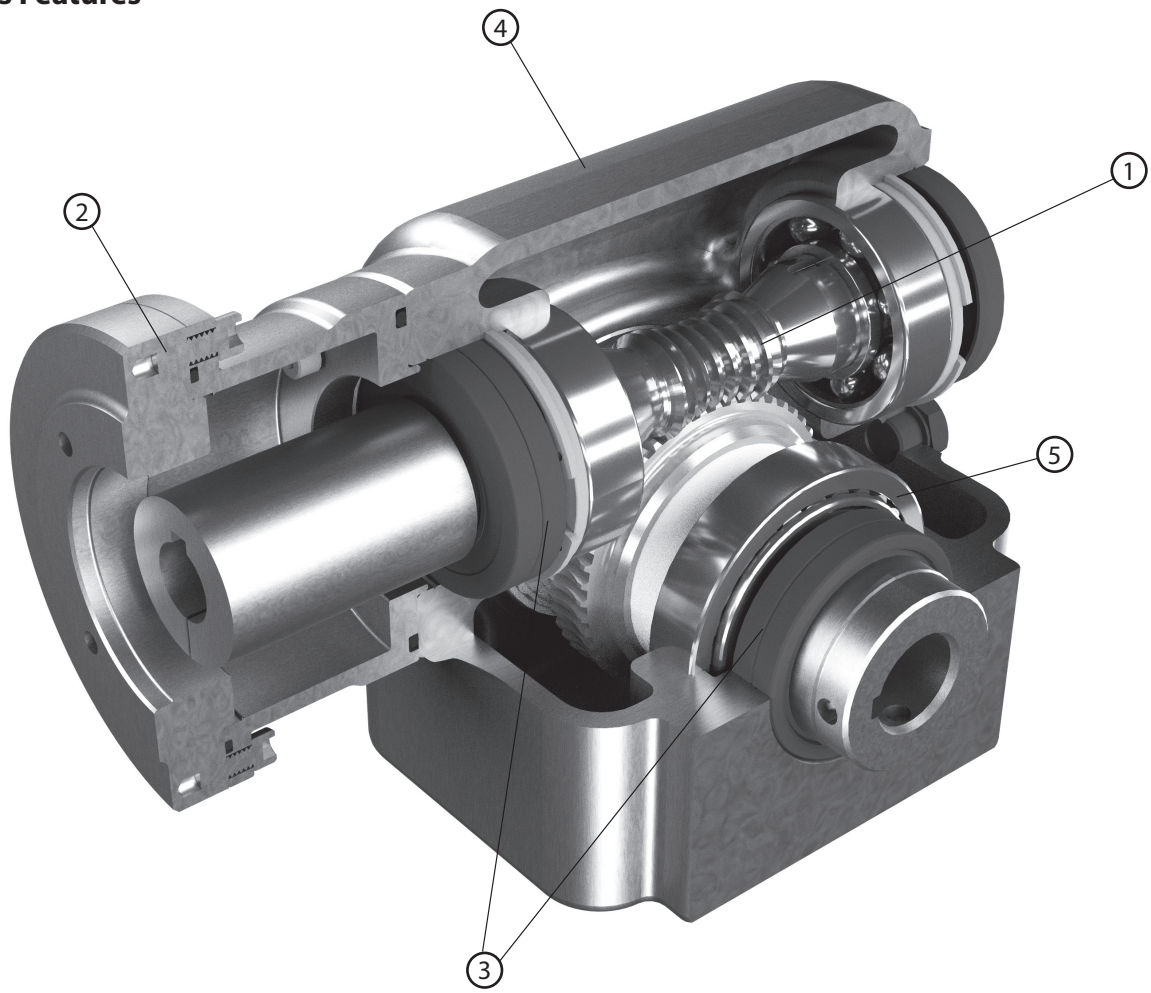

1. Globoidal gear set – between 3-8 teeth in contact at once, allowing 300% shock load capacity
2. Motor adapters designed to fit face mounted stainless steel servo or induction motors
3. Double input and output seals; Nitrile or Viton options
4. Smooth, round stainless steel housing with electro-polished surface
5. Tapered roller bearings

EJS Series Model Code

EJS	-	5 0	-	2 5	-	H 0	0	-	K D	1 6 A	-	B N
(1) Model	-	(2) Frame Szie	-	(3) Ratio	-	(4) Output Shaft	(5) Backlash	-	(6) Motor Mounting		-	(7) Modifications
									Motor Code	Motor Shaft Diameter		

(1) Model

Order Code

EJS	Series

(2) Frame Size

Order Code

39
44
50
60
76

(3) Ratio

Order Code

5	5:1
7	7.5:1
10	10:1
15	15:1
20	20:1
25	25:1
30	30:1
40	40:1
50	50:1
60	60:1

(4) Output Shaft

Order Code

(See the following diagrams)

H0	Hollow Shaft(*1)
SR	Solid Shaft Right
SL	Solid Shaft Left
SW	Solid Double
DR	Hollow Shrink Right
DL	Hollow Shrink Left

(5) Backlash

Order Code

0	Standard
L	Low Backlash

(6)Motor Mounting

Order Code

Motor Code		Motor Shaft Dia.			Motor Brand & Code
-					Shaft-In (no adapter)
C56					NEMA 56C
C140					NEMA 143/145TC
C180					NEMA 182/184TC
A	A	1	6		Allen Bradley MPS-A / B330P
A	B	2	4		Allen Bradley MPS-A / B4540F, VPS-A1304D
A	C	2	8		Allen Bradley MPS-A / B560F, VPS-B1653D
K	A	1	4		Kollmorgen AKMH3 Code AC or AN
K	B	1	4		Kollmorgen AKMH3 Code CC or CN
K	C	1	9		Kollmorgen AKMH4 Code AC or AN
K	D	1	6	A	Kollmorgen AKMH4 Code BK or BN
K	E	1	9		Kollmorgen AKMH4 Code CC or CN
K	F	1	6	A	Kollmorgen AKMH4 Code DK or DN
K	H	2	4		Kollmorgen AKMH5 Code AC or AN
K	I	1	9	A	Kollmorgen AKMH5 Code BK or BN
K	J	1	9	A	Kollmorgen AKMH5 Code DK or DN
K	K	2	4		Kollmorgen AKMH5 Code CC or CN
K	L	2	4		Kollmorgen AKMH5 Code GC or GN
K	M	2	4		Kollmorgen AKMH5 Code HC or HN
K	P	3	2		Kollmorgen AKMH6 Code AC or AN
K	Q	3	2		Kollmorgen AKMH6 Code CC or CN
K	R	2	8	A	Kollmorgen AKMH6, Code DK or DN

(7) Modifications

Order Code

N/A	Standard
H	Foundation Hole Plug
C	External Viton Seals
ML	Mounting Flange - Left
MR	Mounting Flange - Right
FL	Machined Face - Left
FR	Machined Face - Right
N	Inch Solid/Hollow output shaft
B	Feet Base
E	Double Extended Input Sahft
A_	Special

Inch Hollow Bore Size options (*2)

Hollow Bore Size	39	44	50	60	76
0.625"	•				
0.875"	•	•			
1.000"	A	•	•	•	
1.125"		•	•	•	
1.188"			•	•	
1.250"		A	•	•	
1.438"			A	A	•
1.750"					•
1.938"					•
2.188"					A

Notes:

*1) See inch hollow bore size option table.

*2) Hollow bore options option for each frame size. "A" is standard.

Output Shaft Orientation

SL : Solid Shaft Left

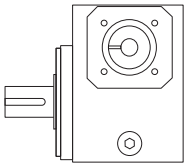

SR : Solid Shaft Right

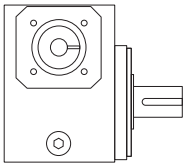

SW : Solid Shaft Double

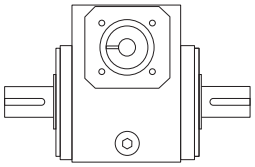

EJS 039 1-Stage Specifications

Frame Size		039				
Ratio	--	5	7.5	10	15	20
Nominal Output Torque	[Nm]	42	52	58	70	70
Maximum Acceleration Torque	[Nm]	56	70	78	93	91
Emergency Stop Torque	[Nm]	84	104	117	141	139
No Load Running Torque *1	[Nm]	0.45				
Nominal Input Speed	[rpm]	2,000				
Maximum Continuous Input Speed	[rpm]	3,000				
Maximum Cyclic Input Speed	[rpm]	3,000				
Maximum Radial Load *2	[N]	2,670				
Maximum Axial Load *3	[N]	2,670				
Moment of Inertia	[kgcm2]	1.05	0.93	0.89	0.86	0.85
Efficiency *4	[%]	92	91	90	88	85
Torsional Rigidity	[Nm/arcmin]	5.8				
Maximum Torsional Backlash (Standard)	[Arc-min]	≤ 24				
Maximum Torsional Backlash (Low)	[Arc-min]	≤ 8				
Noise Level *5	dB [A]	≤ 73				
Weight *6	[kg]	14				
Ambient Temperature	[°C]	-23 ~ 93				
Permitted Housting Temperature	[°C]	100				
Service Life	[Hours]	20,000				
Protection Class	--	IP 69K				
Lubrication	--	Synthetic Food Grade Oil				
Mounting Position	--	Any				

*1) Torque at no load applied to the input shaft at 2,000 rpm
*2) The maximum radial load the gearbox can accept
*3) The maximum axial load the gearbox can accept
*4) The efficiency at the nominal output torque rating
*5) Measured with no load applied to the input shaft at 2,000 rpm
*6) Weight may vary slightly between models

EJS 039 1-Stage Specifications

Frame Size	039					
Ratio	--	25	30	40	50	60
Nominal Output Torque	[Nm]	70	66	63	61	59
Maximum Acceleration Torque	[Nm]	91	87	83	80	77
Emergency Stop Torque	[Nm]	139	133	127	122	118
No Load Running Torque *1	[Nm]	0.45				
Nominal Input Speed	[rpm]	2,000				
Maximum Continuous Input Speed	[rpm]	3,000				
Maximum Cyclic Input Speed	[rpm]	3,000				
Maximum Radial Load *2	[N]	2,670				
Maximum Axial Load *3	[N]	2,670				
Moment of Inertia	[kgcm2]	0.85	0.85	0.85	0.84	0.84
Efficiency *4	[%]	84	80	76	73	70
Torsional Rigidity	[Nm/arcmin]	5.8				
Maximum Torsional Backlash (Standard)	[Arc-min]	≤ 24				
Maximum Torsional Backlash (Low)	[Arc-min]	≤ 8				
Noise Level *5	dB [A]	≤ 73				
Weight *6	[kg]	14				
Ambient Temperature	[°C]	-23 ~ 93				
Permitted Housting Temperature	[°C]	100				
Service Life	[Hours]	20,000				
Protection Class	--	IP 69K				
Lubrication	--	Synthetic Food Grade Oil				
Mounting Position	--	Any				

*1) Torque at no load applied to the input shaft at 2,000 rpm

*2) The maximum radial load the gearbox can accept

*3) The maximum axial load the gearbox can accept

*4) The efficiency at the nominal output torque rating

*5) Measured with no load applied to the input shaft at 2,000 rpm

*6) Weight may vary slightly between models

EJS 044 1-Stage Specifications

Frame Size	044					
Ratio	Units	5	7.5	10	15	20
Nominal Output Torque	[Nm]	58	72	81	92	91
Maximum Acceleration Torque	[Nm]	78	97	108	122	120
Emergency Stop Torque	[Nm]	116	144	162	183	181
No Load Running Torque *1	[Nm]	0.68				
Nominal Input Speed	[rpm]	2,000				
Maximum Continuous Input Speed	[rpm]	3,000				
Maximum Cyclic Input Speed	[rpm]	3,000				
Maximum Radial Load *2	[N]	4,895				
Maximum Axial Load *3	[N]	4,895				
Moment of Inertia	[kgcm²]	1.36	1.16	1.08	1.03	1.01
Efficiency *4	[%]	92	91	90	88	85
Torsional Rigidity	[Nm/arcmin]	7.6				
Maximum Torsional Backlash (Standard)	[Arc-min]	≤ 20				
Maximum Torsional Backlash (Low)	[Arc-min]	≤ 7				
Noise Level *5	dB [A]	≤ 75				
Weight *6	[kg]	15.5				
Ambient Temperature	[°C]	-23 ~ 93				
Permitted Housting Temperature	[°C]	100				
Service Life	[Hours]	20,000				
Protection Class	--	IP 69K				
Lubrication	--	Synthetic Food Grade Oil				
Mounting Position	--	Any				

*1) Torque at no load applied to the input shaft at 2,000 rpm
*2) The maximum radial load the gearbox can accept
*3) The maximum axial load the gearbox can accept
*4) The efficiency at the nominal output torque rating
*5) Measured with no load applied to the input shaft at 2,000 rpm
*6) Weight may vary slightly between models

EJS 044 1-Stage Specifications

Frame Size	**044**					
Ratio	Units	25	30	40	50	60
Nominal Output Torque	[Nm]	90	92	88	85	82
Maximum Acceleration Torque	[Nm]	96	120	115	111	106
Emergency Stop Torque	[Nm]	179	184	176	170	163
No Load Running Torque *1	[Nm]	0.68				
Nominal Input Speed	[rpm]	2,000				
Maximum Continuous Input Speed	[rpm]	3,000				
Maximum Cyclic Input Speed	[rpm]	3,000				
Maximum Radial Load *2	[N]	4,895				
Maximum Axial Load *3	[N]	4,895				
Moment of Inertia	[kgcm2]	1.01	1.00	1.00	1.00	0.99
Efficiency *4	[%]	84	80	76	73	70
Torsional Rigidity	[Nm/arcmin]	7.6				
Maximum Torsional Backlash (Standard)	[Arc-min]	≤ 20				
Maximum Torsional Backlash (Low)	[Arc-min]	≤ 7				
Noise Level *5	dB [A]	≤ 75				
Weight *6	[kg]	15.5				
Ambient Temperature	[°C]	-23 ~ 93				
Permitted Housting Temperature	[°C]	100				
Service Life	[Hours]	20,000				
Protection Class	--	IP 69K				
Lubrication	--	Synthetic Food Grade Oil				
Mounting Position	--	Any				

*1) Torque at no load applied to the input shaft at 2,000 rpm

*2) The maximum radial load the gearbox can accept

*3) The maximum axial load the gearbox can accept

*4) The efficiency at the nominal output torque rating

*5) Measured with no load applied to the input shaft at 2,000 rpm

*6) Weight may vary slightly between models

EJS 050 1-Stage Specifications

Frame Size		050				
Ratio	--	5	7.5	10	15	20
Nominal Output Torque	[Nm]	77	96	108	130	129
Maximum Acceleration Torque	[Nm]	104	130	144	172	168
Emergency Stop Torque	[Nm]	155	193	216	260	258
No Load Running Torque *1	[Nm]	0.74				
Nominal Input Speed	[rpm]	2,000				
Maximum Continuous Input Speed	[rpm]	3,000				
Maximum Cyclic Input Speed	[rpm]	3,000				
Maximum Radial Load *2	[N]	5,340				
Maximum Axial Load *3	[N]	5,340				
Moment of Inertia (≤ Ø19)	[kgcm2]	2.54	2.18	2.05	1.96	1.93
Efficiency *4	[%]	92	91	90	88	85
Torsional Rigidity	[Nm/arcmin]	10.4				
Maximum Torsional Backlash (Standard)	[Arc-min]	≤ 15				
Maximum Torsional Backlash (Low)	[Arc-min]	≤ 6				
Noise Level *5	dB [A]	≤ 80				
Weight *6	[kg]	16				
Ambient Temperature	[°C]	-23 ~ 93				
Permitted Housting Temperature	[°C]	100				
Service Life	[Hours]	20,000				
Protection Class	--	IP 69K				
Lubrication	--	Synthetic Food Grade Oil				
Mounting Position	--	Any				

*1) Torque at no load applied to the input shaft at 2,000 rpm

*2) The maximum radial load the gearbox can accept

*3) The maximum axial load the gearbox can accept

*4) The efficiency at the nominal output torque rating

*5) Measured with no load applied to the input shaft at 2,000 rpm

*6) Weight may vary slightly between models

EJS 050 1-Stage Specifications

Frame Size	050					
Ratio	--	25	30	40	50	60
Nominal Output Torque	[Nm]	129	123	117	113	109
Maximum Acceleration Torque	[Nm]	168	161	154	148	142
Emergency Stop Torque	[Nm]	258	246	234	226	218
No Load Running Torque *1	[Nm]	0.74				
Nominal Input Speed	[rpm]	2,000				
Maximum Continuous Input Speed	[rpm]	3,000				
Maximum Cyclic Input Speed	[rpm]	3,000				
Maximum Radial Load *2	[N]	5,340				
Maximum Axial Load *3	[N]	5,340				
Moment of Inertia (≤ Ø19)	[kgcm2]	1.92	1.91	1.90	1.90	1.89
Efficiency *4	[%]	84	80	76	73	70
Torsional Rigidity	[Nm/arcmin]	10.4				
Maximum Torsional Backlash (Standard)	[Arc-min]	≤ 15				
Maximum Torsional Backlash (Low)	[Arc-min]	≤ 6				
Noise Level *5	dB [A]	≤ 80				
Weight *6	[kg]	16				
Ambient Temperature	[°C]	-23 ~ 93				
Permitted Housting Temperature	[°C]	100				
Service Life	[Hours]	20,000				
Protection Class	--	IP 69K				
Lubrication	--	Synthetic Food Grade Oil				
Mounting Position	--	Any				

*1) Torque at no load applied to the input shaft at 2,000 rpm

*2) The maximum radial load the gearbox can accept

*3) The maximum axial load the gearbox can accept

*4) The efficiency at the nominal output torque rating

*5) Measured with no load applied to the input shaft at 2,000 rpm

*6) Weight may vary slightly between models

EJS 060 1-Stage Specifications

Frame Size		**060**				
Ratio	--	5	7.5	10	15	20
Nominal Output Torque	[Nm]	123	154	172	188	175
Maximum Acceleration Torque	[Nm]	170	212	227	235	276
Emergency Stop Torque	[Nm]	246	308	344	376	350
No Load Running Torque *1	[Nm]	0.79				
Nominal Input Speed	[rpm]	2,000				
Maximum Continuous Input Speed	[rpm]	3,000				
Maximum Cyclic Input Speed	[rpm]	3,000				
Maximum Radial Load *2	[N]	8,010				
Maximum Axial Load *3	[N]	8,010				
Moment of Inertia (≤ Ø19)	[kgcm2]	3.48	2.77	2.52	2.35	2.28
Efficiency *4	[%]	92	91	90	88	85
Torsional Rigidity	[Nm/arcmin]	17.7				
Maximum Torsional Backlash (Standard)	[Arc-min]	≤ 13				
Maximum Torsional Backlash (Low)	[Arc-min]	≤ 5				
Noise Level *5	dB [A]	≤ 80				
Weight *6	[kg]	21				
Ambient Temperature	[°C]	-23 ~ 93				
Permitted Housting Temperature	[°C]	100				
Service Life	[Hours]	20,000				
Protection Class	--	IP 69K				
Lubrication	--	Synthetic Food Grade Oil				
Mounting Position	--	Any				

*1) Torque at no load applied to the input shaft at 2,000 rpm

*2) The maximum radial load the gearbox can accept

*3) The maximum axial load the gearbox can accept

*4) The efficiency at the nominal output torque rating

*5) Measured with no load applied to the input shaft at 2,000 rpm

*6) Weight may vary slightly between models

EJS 060 1-Stage Specifications

Frame Size	**060**					
Ratio	--	25	30	40	50	60
Nominal Output Torque	[Nm]	172	175	173	174	173
Maximum Acceleration Torque	[Nm]	230	229	232	243	225
Emergency Stop Torque	[Nm]	344	350	346	348	346
No Load Running Torque *1	[Nm]	0.79				
Nominal Input Speed	[rpm]	2,000				
Maximum Continuous Input Speed	[rpm]	3,000				
Maximum Cyclic Input Speed	[rpm]	3,000				
Maximum Radial Load *2	[N]	8,010				
Maximum Axial Load *3	[N]	8,010				
Moment of Inertia (≤ Ø19)	[kgcm2]	2.26	2.24	2.22	2.22	2.21
Efficiency *4	[%]	84	80	76	73	70
Torsional Rigidity	[Nm/arcmin]	17.7				
Maximum Torsional Backlash (Standard)	[Arc-min]	≤ 13				
Maximum Torsional Backlash (Low)	[Arc-min]	≤ 5				
Noise Level *5	dB [A]	≤ 80				
Weight *6	[kg]	21				
Ambient Temperature	[°C]	-23 ~ 93				
Permitted Housting Temperature	[°C]	100				
Service Life	[Hours]	20,000				
Protection Class	--	IP 69K				
Lubrication	--	Synthetic Food Grade Oil				
Mounting Position	--	Any				

*1) Torque at no load applied to the input shaft at 2,000 rpm

*2) The maximum radial load the gearbox can accept

*3) The maximum axial load the gearbox can accept

*4) The efficiency at the nominal output torque rating

*5) Measured with no load applied to the input shaft at 2,000 rpm

*6) Weight may vary slightly between models

EJS 076 1-Stage Specifications

Frame Size	076					
Ratio	--	5	7.5	10	15	20
Nominal Output Torque	[Nm]	237	300	345	385	381
Maximum Acceleration Torque	[Nm]	330	420	476	517	502
Emergency Stop Torque	[Nm]	474	600	690	770	762
No Load Running Torque *1	[Nm]	1.24				
Nominal Input Speed	[rpm]	2,000				
Maximum Continuous Input Speed	[rpm]	3,000				
Maximum Cyclic Input Speed	[rpm]	3,000				
Maximum Radial Load *2	[N]	10,235				
Maximum Axial Load *3	[N]	10,235				
Moment of Inertia (≤ Ø19)	[kgcm2]	13.98	10.74	9.6	8.79	8.51
Efficiency *4	[%]	92	91	90	88	85
Torsional Rigidity	[Nm/arcmin]	41.6				
Maximum Torsional Backlash (Standard)	[Arc-min]	≤ 10				
Maximum Torsional Backlash (Low)	[Arc-min]	≤ 4				
Noise Level *5	dB [A]	≤ 83				
Weight *6	[kg]	41				
Ambient Temperature	[°C]	-23 ~ 93				
Permitted Housting Temperature	[°C]	100				
Service Life	[Hours]	20,000				
Protection Class	--	IP 69K				
Lubrication	--	Synthetic Food Grade Oil				
Mounting Position	--	Any				

*1) Torque at no load applied to the input shaft at 2,000 rpm
*2) The maximum radial load the gearbox can accept
*3) The maximum axial load the gearbox can accept
*4) The efficiency at the nominal output torque rating
*5) Measured with no load applied to the input shaft at 2,000 rpm
*6) Weight may vary slightly between models

EJS 076 1-Stage Specifications

Frame Size	076					
Ratio	--	25	30	40	50	60
Nominal Output Torque	[Nm]	396	393	375	361	347
Maximum Acceleration Torque	[Nm]	519	535	511	493	473
Emergency Stop Torque	[Nm]	792	786	750	722	694
No Load Running Torque *1	[Nm]	1.24				
Nominal Input Speed	[rpm]	2,000				
Maximum Continuous Input Speed	[rpm]	3,000				
Maximum Cyclic Input Speed	[rpm]	3,000				
Maximum Radial Load *2	[N]	10,235				
Maximum Axial Load *3	[N]	10,235				
Moment of Inertia (≤ Ø19)	[kgcm2]	8.38	8.31	8.23	8.20	8.18
Efficiency *4	[%]	84	80	76	73	70
Torsional Rigidity	[Nm/arcmin]	41.6				
Maximum Torsional Backlash (Standard)	[Arc-min]	≤ 10				
Maximum Torsional Backlash (Low)	[Arc-min]	≤ 4				
Noise Level *5	dB [A]	≤ 83				
Weight *6	[kg]	41				
Ambient Temperature	[°C]	-23 ~ 93				
Permitted Housting Temperature	[°C]	100				
Service Life	[Hours]	20,000				
Protection Class	--	IP 69K				
Lubrication	--	Synthetic Food Grade Oil				
Mounting Position	--	Any				

*1) Torque at no load applied to the input shaft at 2,000 rpm

*2) The maximum radial load the gearbox can accept

*3) The maximum axial load the gearbox can accept

*4) The efficiency at the nominal output torque rating

*5) Measured with no load applied to the input shaft at 2,000 rpm

*6) Weight may vary slightly between models

EJS Dimensions – Hollow Output Shaft

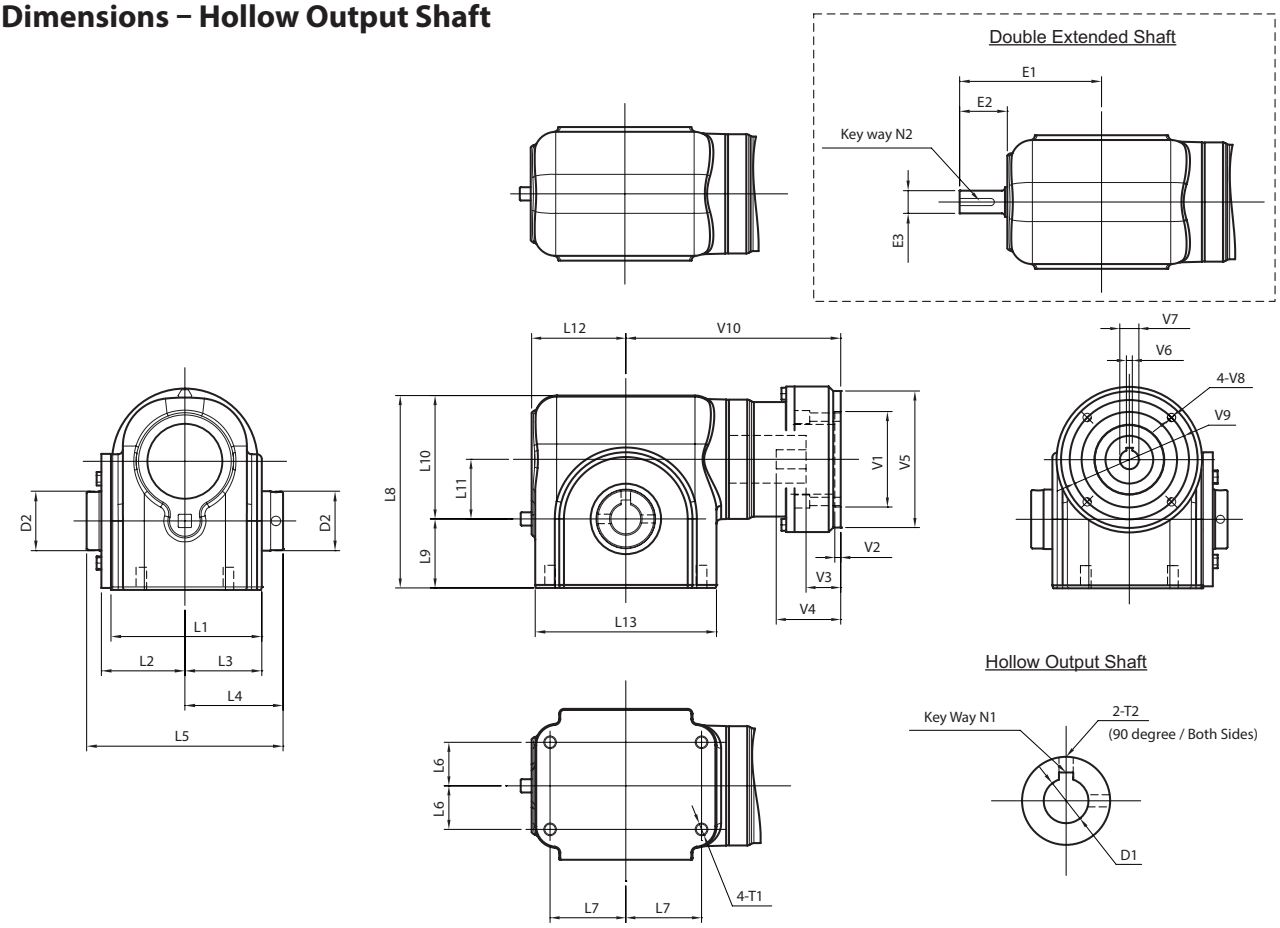

Frame Size	Unit	EJS39	EJS44	EJS50	EJS60	EJS76
L1	[mm]	116.6	121.7	126.5	132.6	172.5
L2	[mm]	65.0	67.6	70.1	72.9	95.0
L3	[mm]	59.4	62.2	64.5	67.6	87.4
L4	[mm]	77.2	79.8	82.3	85.3	109.7
L5	[mm]	154.7	159.8	164.6	170.7	219.5
L6	[mm]	34.9	34.9	36.4	36.4	50.8
L7	[mm]	53.1	53.1	63.5	63.5	88.9
L8	[mm]	138.4	148.3	161.3	177.3	229.6
L9	[mm]	48.5	52.3	57.9	64.0	82.6
L10	[mm]	89.9	96.0	103.4	113.3	147.1
L11	[mm]	39.1	44.5	50.0	59.7	76.2
L12	[mm]	72.4	78.0	79.0	87.4	115.6
L13	[mm]	140.0	151.9	151.9	156.0	210.1
D1	[mm]	φ19	φ20	φ25	φ28	φ35
D2	[mm]	φ40	φ45	φ50	φ55	φ75
Key way N1	[mm]	6.0x3.0	6.0x3.0	8.0x4.0	8.0x4.0	10x4.4
T1	[mm]	M8x12	M8x12	M10x15	M10x15	M12x19.5
T2	[mm]	5/16-24	5/16-24	5/16-24	5/16-24	5/16-24
E1	[mm]	117.1	123.4	126.5	134.1	193.8
E2	[mm]	44.7	45.5	47.5	46.7	78.2
E3	[Inch]	0.75	0.75	0.75	0.75	1.19
Key way N2	[Inch]	3/16x3/32	3/16x3/32	3/16x3/32	3/16x3/32	1/8x1/4
V1 ~ V10	Motor attachment dimensions are made to fit your servo motor.					

EJS Dimensions – Solid Output Shaft

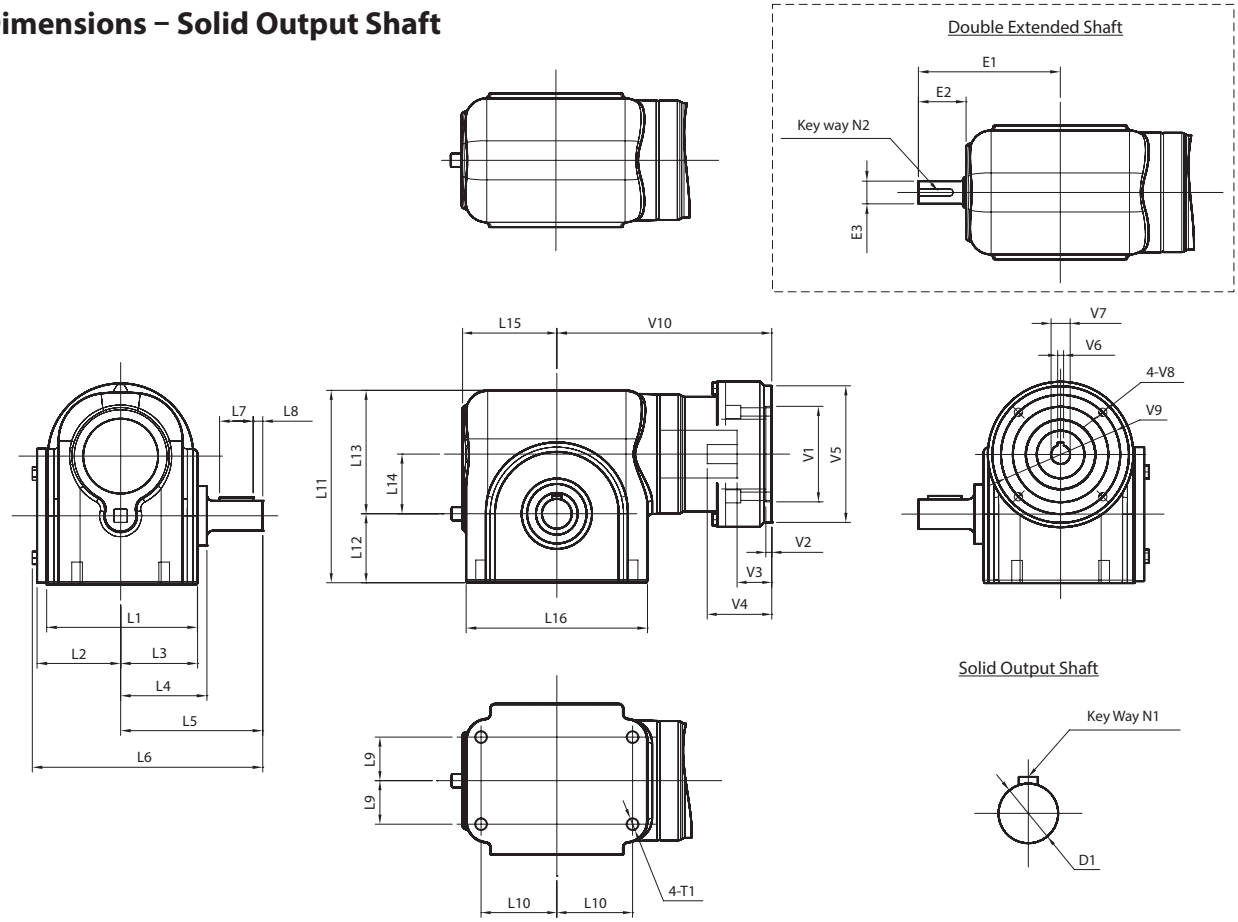

Frame Size	Unit	EJS39	EJS44	EJS50	EJS60	EJS76
L1	[mm]	116.6	121.7	126.5	132.6	172.5
L2	[mm]	65.0	67.6	70.1	72.9	95.0
L3	[mm]	59.4	62.2	64.5	67.6	87.4
L4	[mm]	67.3	69.9	72.4	69.6	100.1
L5	[mm]	109.5	109.5	119.1	129.3	174.0
L6	[mm]	178.6	181.1	193.3	206.2	274.3
L7	[mm]	22	22	28	32	40
L8	[mm]	7	7	8	8	10
L9	[mm]	34.9	34.9	36.4	36.4	50.8
L10	[mm]	53.2	53.2	63.5	63.5	88.9
L11	[mm]	138.4	148.3	161.3	177.3	229.6
L12	[mm]	48.5	52.3	57.9	64.0	82.6
L13	[mm]	89.9	96.0	103.4	113.3	147.1
L14	[mm]	39.1	44.5	50.0	59.7	76.2
L15	[mm]	72.4	78.0	79.0	87.4	115.6
L16	[mm]	140.0	151.9	151.9	156.0	210.1
D1	[mm]	φ18	φ20	φ25	φ28	φ35
Key way N1	[mm]	6.0x3.0	6.0x3.0	8.0x4.0	8.0x4.0	10x4.4
T1	[mm]	M8x12	M8x12	M10x15	M10x15	M12x19.5
E1	[mm]	117.1	123.4	126.5	134.1	193.8
E2	[mm]	44.7	45.5	47.5	46.7	78.2
E3	[mm]	0.75	0.75	0.75	0.75	1.19
Key way N2	[Inch]	3/16x3/32	3/16x3/32	3/16x3/32	3/16x3/32	1/8x1/4
V1 ~ V10	Motor attachment dimensions are made to fit your servo motor.					

EJS Dimensions – Shrink Disc Hollow Output Shaft

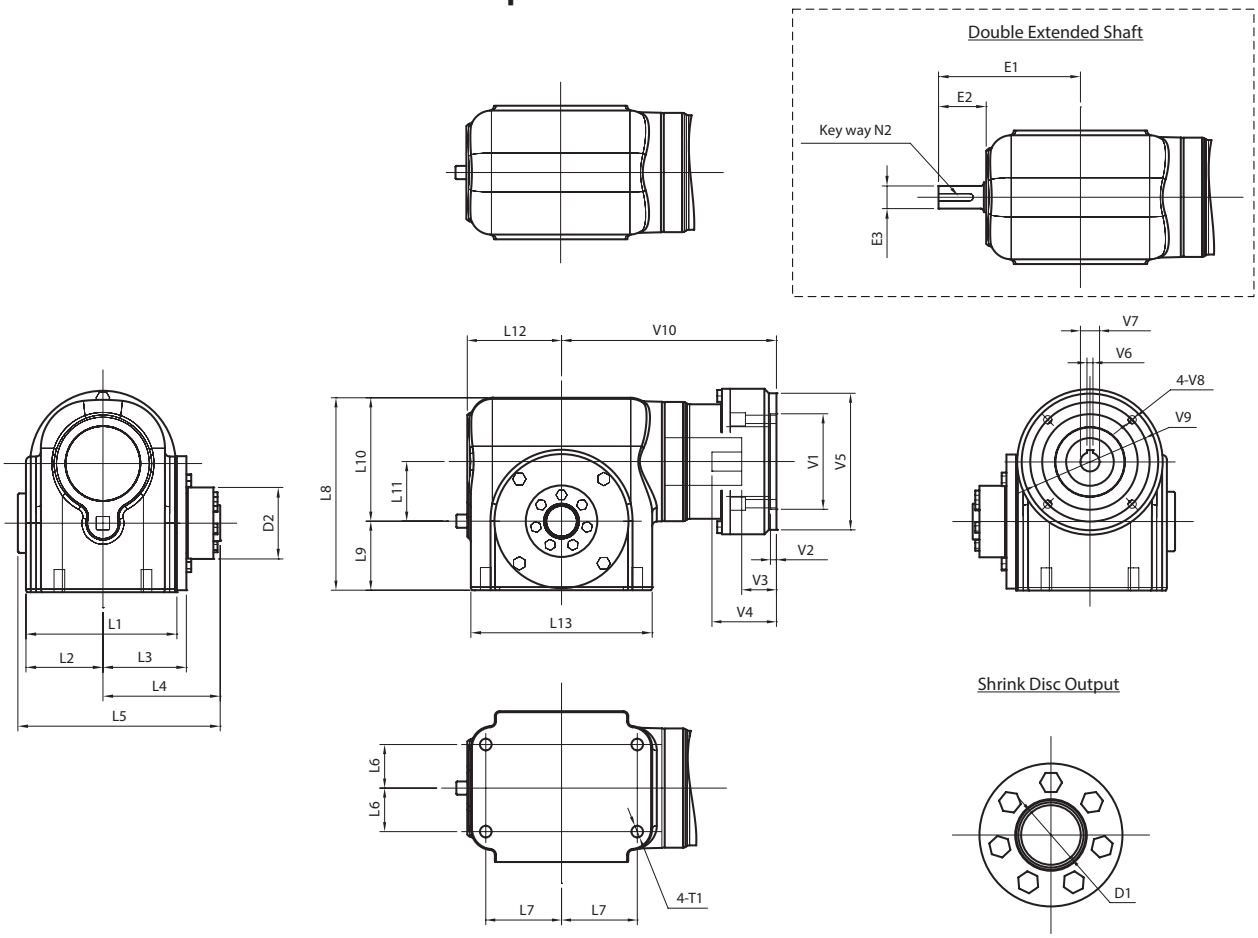

Frame Size	Uinits	EJS39	EJS44	EJS50	EJS60	EJS76
L1	[mm]	116.6	121.7	126.5	132.6	172.5
L2	[mm]	65.0	67.6	70.1	72.9	95.0
L3	[mm]	59.4	62.2	64.5	67.6	87.4
L4	[mm]	93.2	95.8	98.3	102.9	128.5
L5	[mm]	159.5	164.6	169.7	177.3	226.1
L6	[mm]	34.9	34.9	36.4	36.4	50.8
L7	[mm]	53.2	53.2	63.5	63.5	88.9
L8	[mm]	138.4	148.3	161.3	177.3	229.6
L9	[mm]	48.5	52.3	57.9	64.0	82.6
L10	[mm]	89.9	96.0	103.4	113.3	147.1
L11	[mm]	39.1	44.5	50.0	59.7	76.2
L12	[mm]	72.4	78.0	79.0	87.4	115.6
L13	[mm]	140.0	151.9	151.9	156.0	210.1
D1	[mm]	φ25/φ25.008	φ25/φ25.008	φ25/φ25.008	φ30/φ30.008	φ35.002/φ35.018
D2	[mm]	φ60	φ60	φ60	φ72	φ80
T1	[mm]	M8x12	M8x12	M10x15	M10x15	M12x19.5
E1	[mm]	117.1	123.4	126.5	134.1	193.8
E2	[mm]	44.7	45.5	47.5	46.7	78.2
E3	[mm]	0.75	0.75	0.75	0.75	1.19
Key way N2	[Inch]	3/16x3/32	3/16x3/32	3/16x3/32	3/16x3/32	1/8x1/4
V1 ~ V10	Motor attachment dimensions are made to fit your servo motor.					

EJS Dimensions – Optional Mounting Flange

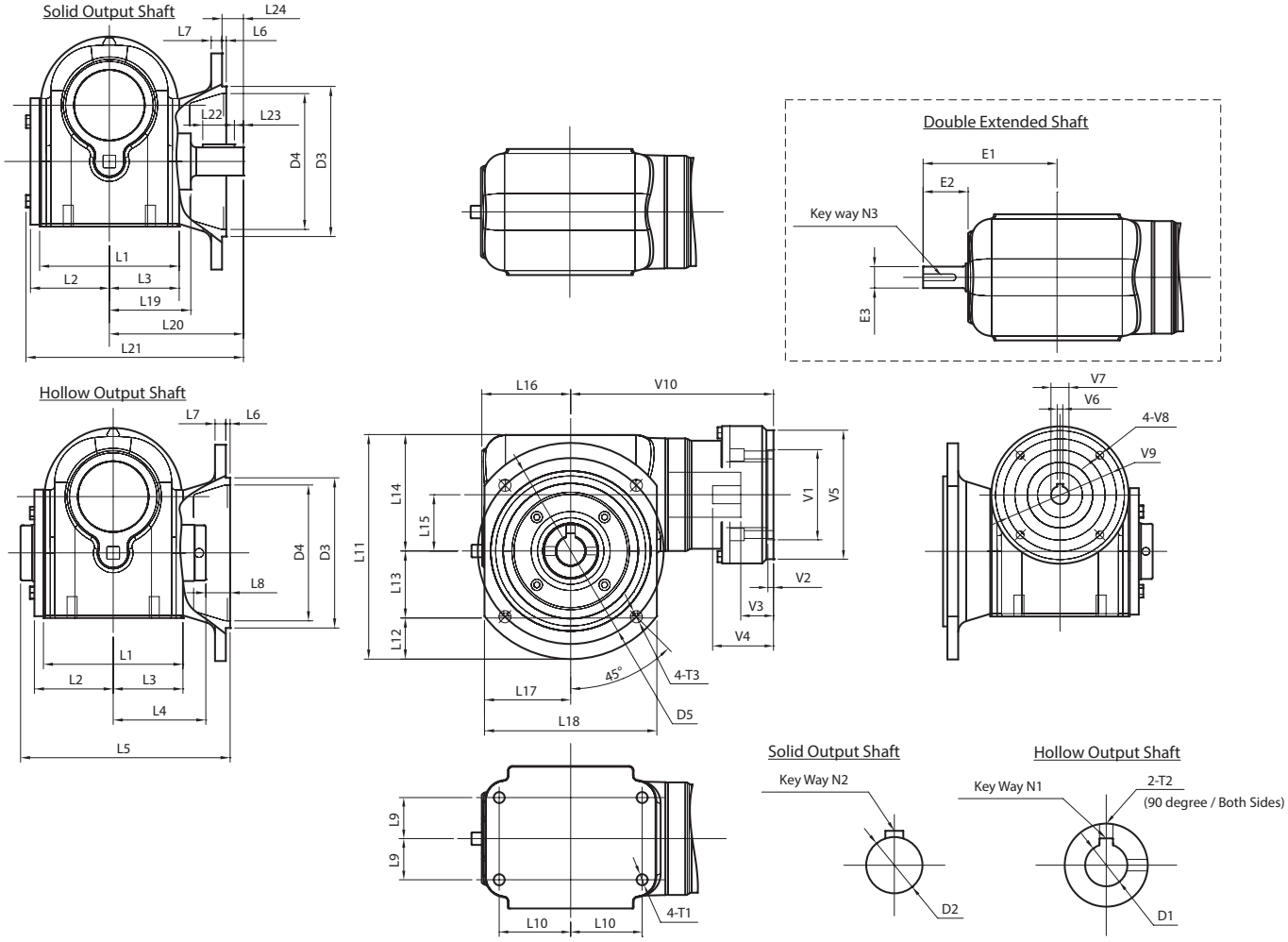

Frame Size	Units	EJS39	EJS44	EJS50	EJS60	EJS76
L1	[mm]	116.6	121.7	126.5	132.6	172.5
L2	[mm]	65.0	67.6	70.1	72.9	95.0
L3	[mm]	59.4	62.2	64.5	67.6	87.4
L4	[mm]	77.2	79.8	82.3	85.3	109.7
L5	[mm]	170	176	186	202	253
L6	[mm]	3.8	3.8	3.8	3.8	3.8
L7	[mm]	9.7	9.7	9.7	9.7	9.7
L8	[mm]	15.7	16.0	21.6	31.5	33.8
L9	[mm]	34.9	34.9	36.4	36.4	50.8
L10	[mm]	53.2	53.2	63.5	63.5	88.9
L11	[mm]	176.3	184.2	199.4	230.6	290.3
L12	[mm]	39.6	35.8	38.1	51.8	60.7
L13	[mm]	48.5	52.3	57.9	64.0	82.6
L14	[mm]	88.1	96	103.4	115.3	147
L15	[mm]	39.1	44	50.0	59.7	76
L16	[mm]	72.4	78	79.0	87.4	116
L17	[mm]	70	70	76.7	92.5	112
L18	[mm]	140.5	140.5	153.2	185.2	223.3
L19	[mm]	67.3	69.9	72.4	69.6	100.1
L20	[mm]	109.5	109.5	119.1	129.3	174.0

Note: Continue Frame Sizes for Optional Mounting Flange on the next page

EJS Dimensions – Optional Mounting Flange

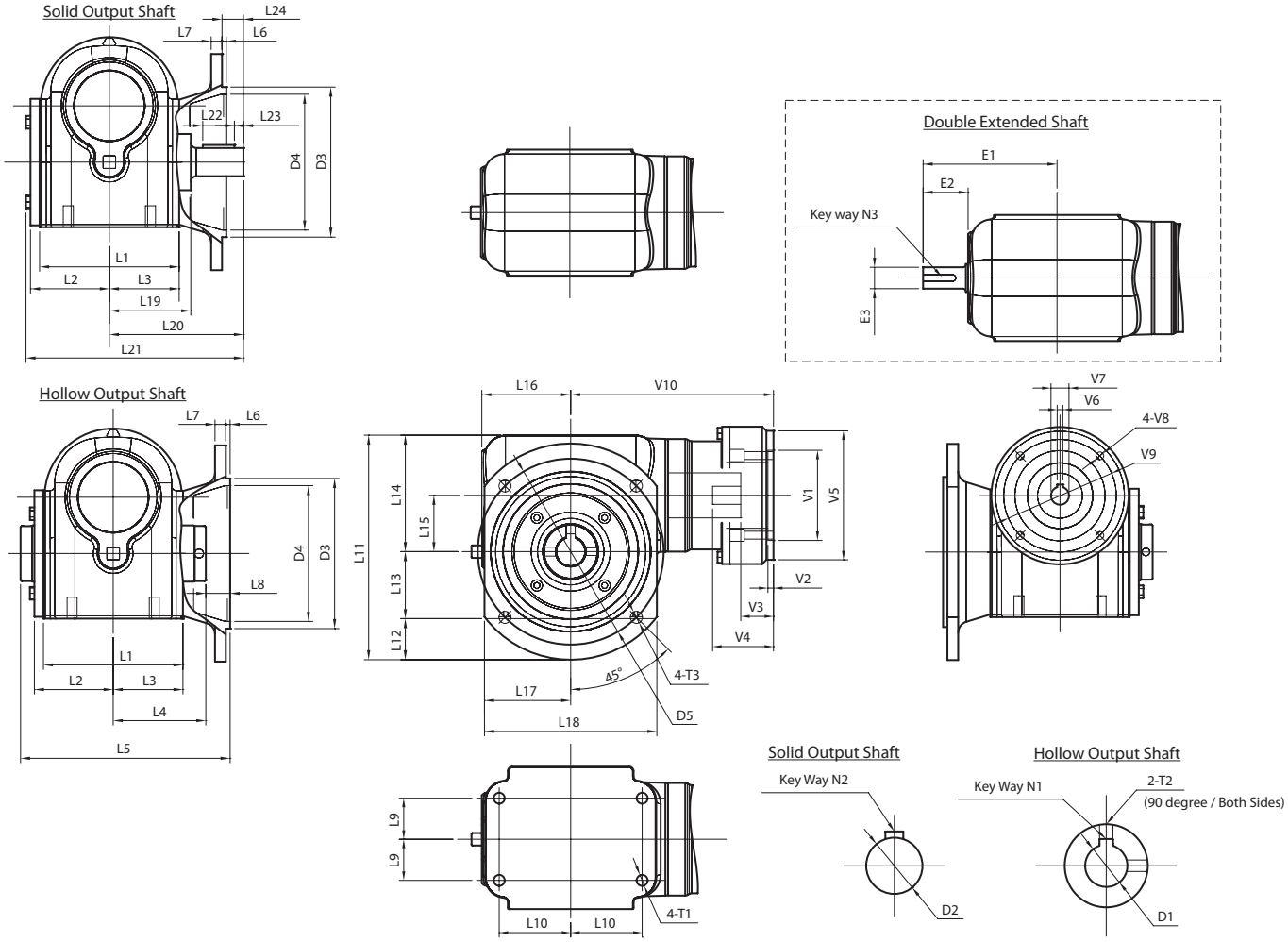

Frame Size	Units	EJS39	EJS44	EJS50	EJS60	EJS76
L21	[mm]	178.6	181.1	193.3	206.2	274.3
L22	[mm]	22	22	28	32	40
L23	[mm]	7	7	8	8	10
L24	[mm]	20.1	17.5	19.1	16.3	34.3
T1	[mm]	M8x12	M8x12	M10x15	M10x15	M12x19.5
D1	[mm]	φ19	φ20	φ25	φ28	φ35
Key way N1	[mm]	6.0x3.0	6.0x3.0	8.0x4.0	8.0x4.0	10x4.4
T2	[mm]	5/16-24	5/16-24	5/16-24	5/16-24	5/16-24
D2	[mm]	φ18	φ20	φ25	φ28	φ35
Key way N2	[mm]	6.0x3.0	6.0x3.0	8.0x4.0	8.0x4.0	10x4.4
D3	[mm]	φ114.3	φ114.3	φ133.4	φ165.1	φ203.2
D4	[mm]	φ103.1	φ103.1	φ120.7	φ142.7	φ182.6
D5	[mm]	φ149.35	φ149.35	φ165.1	φ203.2	φ254
T3	[mm]	9.2	9.2	9.2	9.2	9.2
E1	[mm]	117.1	123.4	126.5	134.1	193.8
E2	[mm]	44.7	45.5	47.5	46.7	78.2
E3	[mm]	0.75	0.75	0.75	0.75	1.19
Key way N3	[Inch]	3/16x3/32	3/16x3/32	3/16x3/32	3/16x3/32	1/8x1/4
V1 ~ V10	Motor attachment dimensions are made to fit your servo motor.					

EJS Dimensions – Side Mount (w/o Flange Mounting)

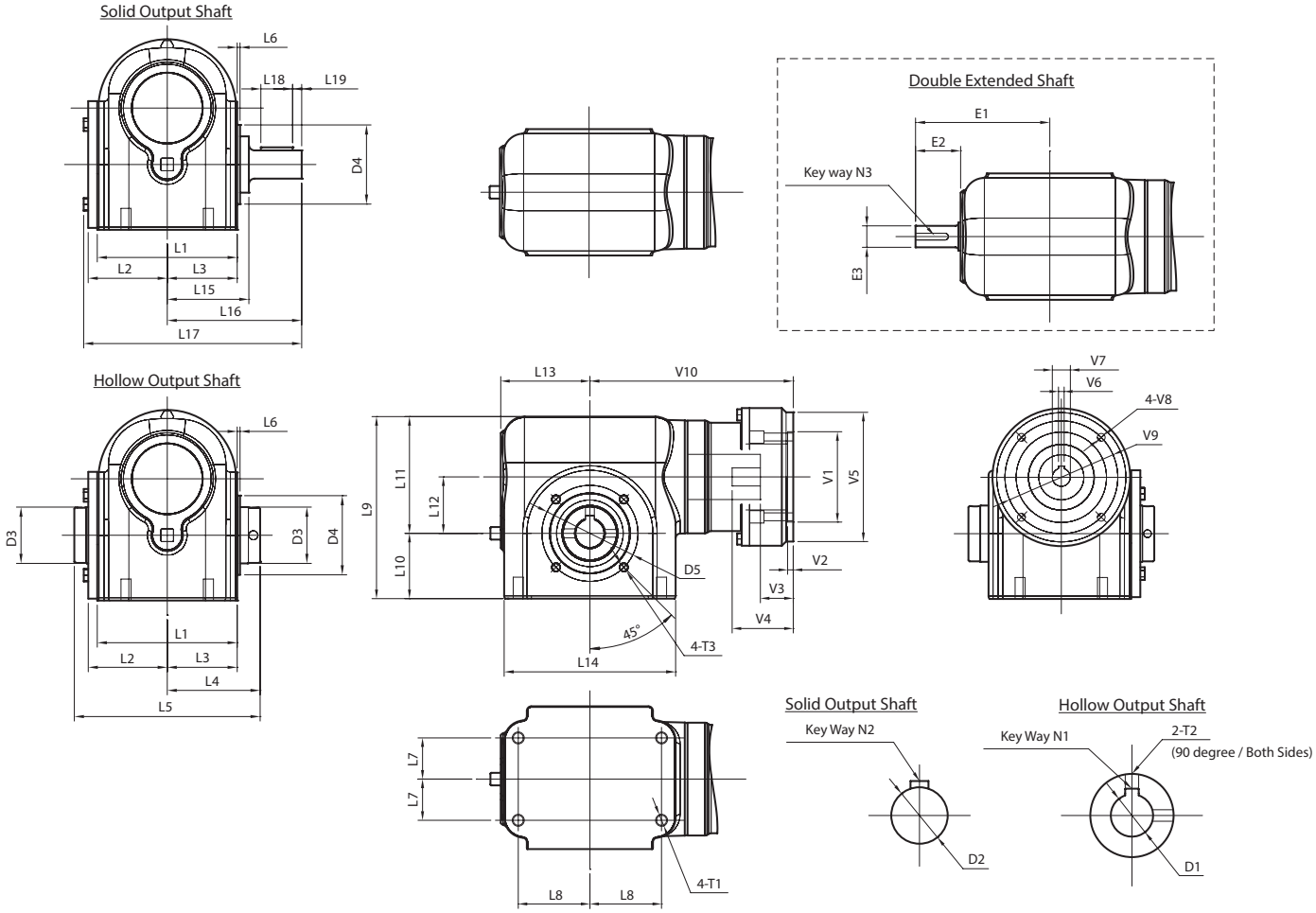

Frame Size	Units	EJS39	EJS44	EJS50	EJS60	EJS76
L1	[mm]	116.6	121.7	126.5	132.6	172.5
L2	[mm]	65.0	67.6	70.1	72.9	95.0
L3	[mm]	59.4	62.2	64.5	67.6	87.4
L4	[mm]	77.2	79.8	82.3	85.3	109.7
L5	[mm]	154.7	159.8	164.6	170.7	219.5
L6	[mm]	2.5	2.5	2.5	2.5	2.5
L7	[mm]	34.9	34.9	36.4	36.4	50.8
L8	[mm]	53.2	53.2	63.5	63.5	88.9
L9	[mm]	138.4	148.3	161.3	177.3	229.6
L10	[mm]	48.5	52.3	57.9	64.0	82.6
L11	[mm]	89.9	96.0	103.4	113.3	147.1
L12	[mm]	39.1	44.5	50.0	59.7	76.2
L13	[mm]	72.4	78.0	79.0	87.4	115.6
L14	[mm]	140.0	151.9	151.9	156.0	210.1
L15	[mm]	67.3	69.9	72.4	69.6	100.1
L16	[mm]	109.5	109.5	119.1	129.3	174.0
L17	[mm]	178.6	181.1	193.3	206.2	274.3

Note: Continue Frame Sizes for Side Mount (w/o Flange Mounting) on the next page

EJS Dimensions – Side Mount (w/o Flange Mounting)

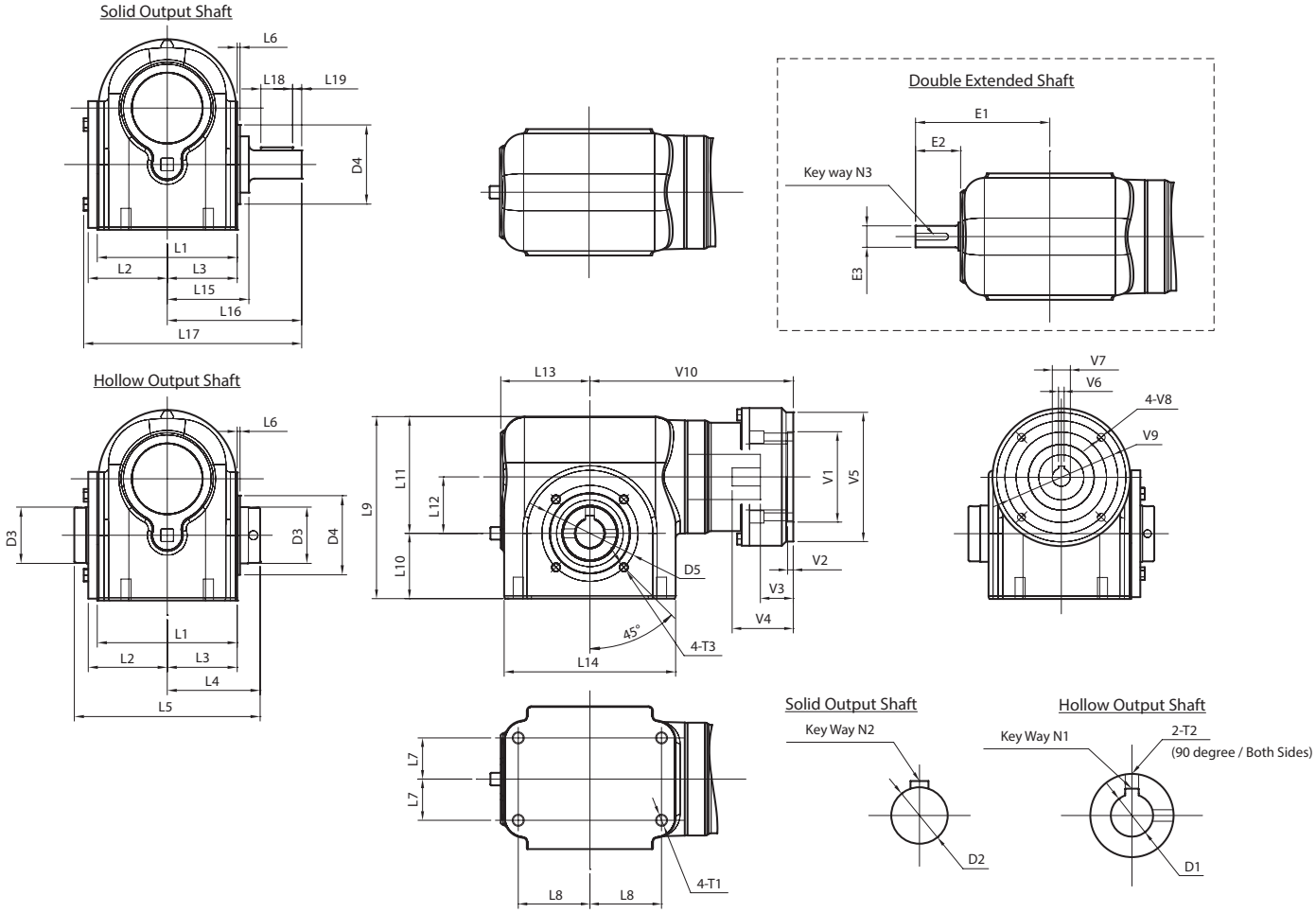

Frame Size	Units	EJS39	EJS44	EJS50	EJS60	EJS76
L18	[Inch]	22	22	28	32	40
L19	[mm]	7	7	8	8	10
T1	[mm]	M8x12	M8x12	M10x15	M10x15	M12x19.5
D1	[mm]	φ19	φ20	φ25	φ28	φ35
Key way N1	[mm]	6.0x3.0	6.0x3.0	8.0x4.0	8.0x4.0	10x4.4
T2	[mm]	5/16-24	5/16-24	5/16-24	5/16-24	5/16-24
D2	[mm]	φ18	φ20	φ25	φ28	φ35
Key way N2	[mm]	6.0x3.0	6.0x3.0	8.0x4.0	8.0x4.0	10x4.4
D3	[mm]	φ40	φ45	φ50	φ55	φ75
D4	[Inch]	φ60	φ70	φ70	φ80	φ110
D5	[mm]	φ75	φ85	φ85	φ95	φ130
T3	[mm]	M6x10	M8x12	M8x12	M8x12	M10x16
E1	[mm]	117.1	123.4	126.5	134.1	193.8
E2	[mm]	44.7	45.5	47.5	46.7	78.2
E3	[Inch]	0.75	0.75	0.75	0.75	1.19
Key way N3	[Inch]	3/16x3/32	3/16x3/32	3/16x3/32	3/16x3/32	1/8x1/4
V1 ~ V10	Motor attachment dimensions are made to fit your servo motor.					

STH SERIES

The STH is an excellent fit for mid-range index table applications that require high accuracy, flexible mounting and a large hollow shaft. This product sets the standard for rotary positioning performance of large inertia loads at an exceptional value. The STH comes with backlash as low as 2 arc-min and indexing accuracy down to +- 60 arc-sec. With a large cross roller bearing, the STH can achieve a max tilting moment load capacity of 200Nm and a maximum radial load of 5000N—a perfect match for mid-size steel or aluminum tables as well as end of arm tooling.

The STH utilizes Nidec Drive Technology Corporation's modular design concept by integrating a VRL070 or EVL070 planetary gearbox at the input section. This allows the STH to achieve reduction ratios from 12:1 to 400:1. Motor mounting is easy with our vast selection of mounting plates. The 85mm hollow shaft provides clearance for wiring, tubing or ball screws to be passed through to effectors, fillers or any other active machinery. Contact us if you need assistance upgrading from legacy mechanical camming devices or pneumatics.

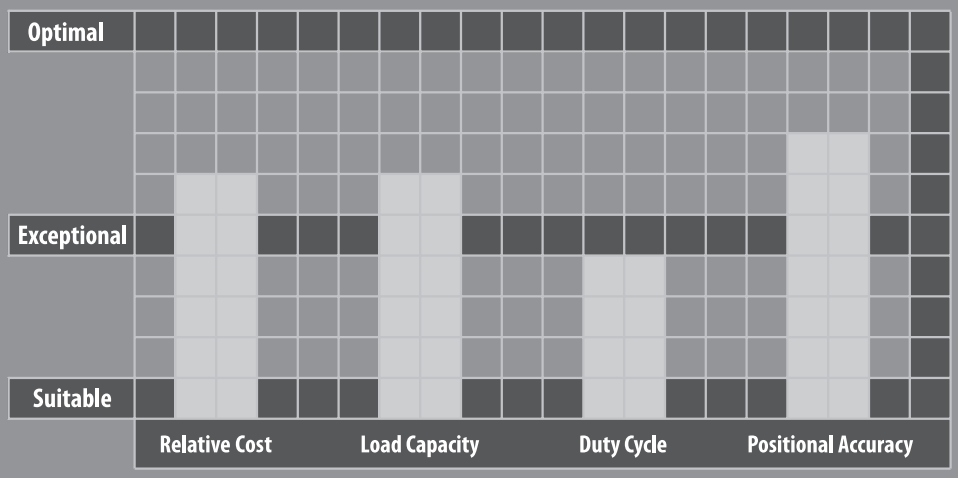

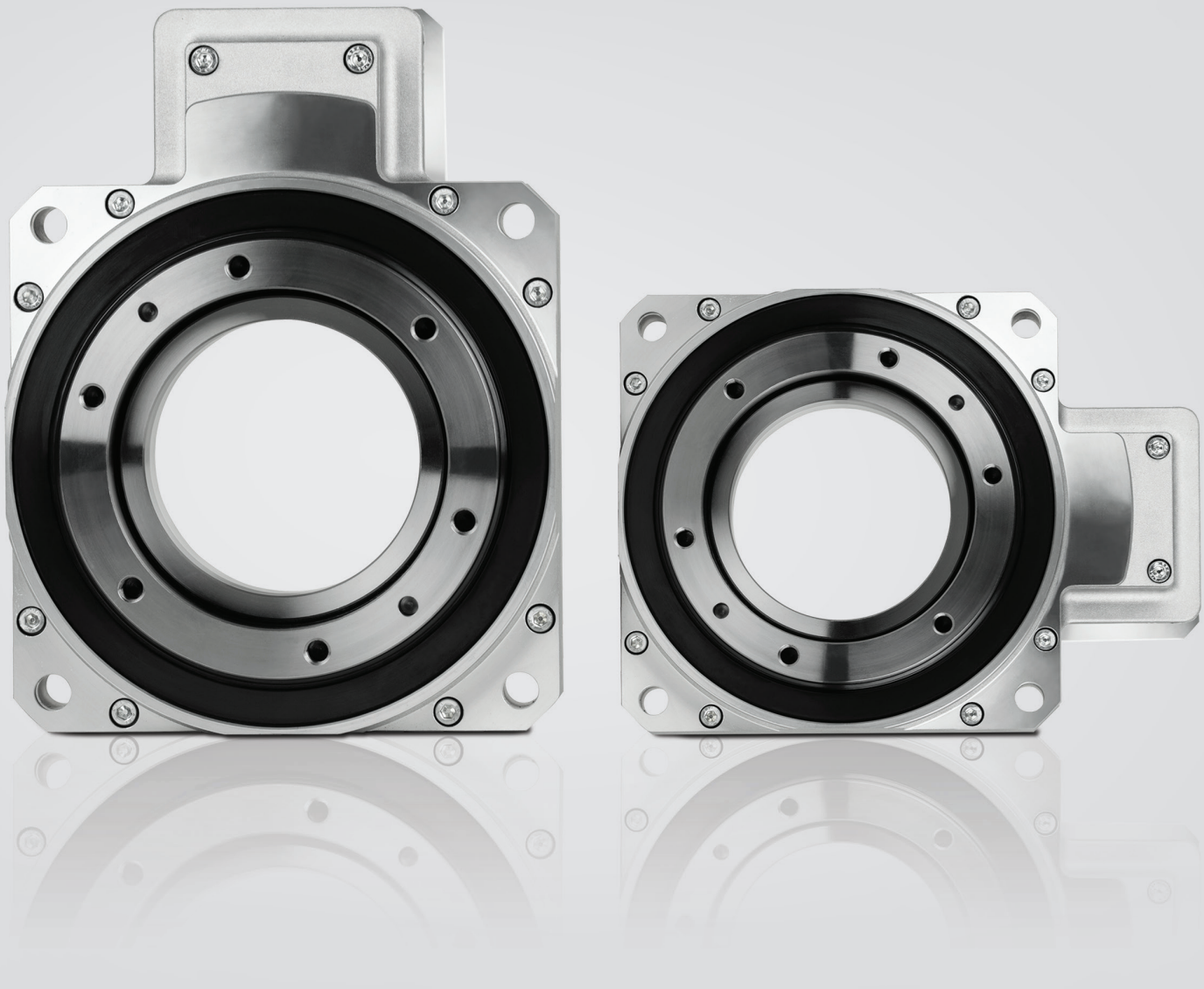

STH SERIES

- 85mm pass through hole allows pass through of air lines, wiring or other peripheral components
- ≤2 arc-min backlash with +- 60 arc-sec indexing accuracy
- Reduction ratios from 12:1 up to 400:1
- 5000N radial load capacity, ideal for mid-range index table applications
- Broad range of mounting adapters offer a simple, precise attachment to any motor
- Maintenance-free solution that is lubricated for life. High performance grease allows flexible mounting in any orientation
- Assembled in the USA with immediate delivery

STH Series Features

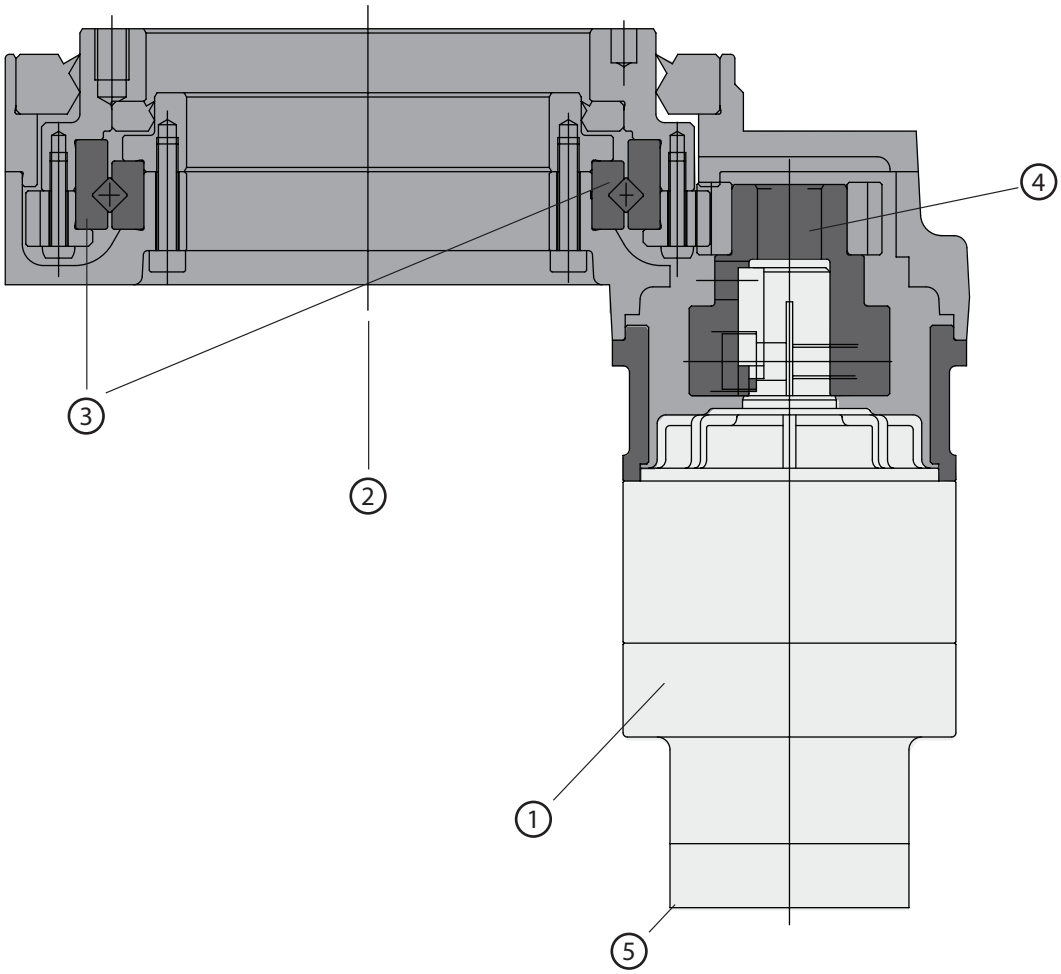

1. VRL070 or EVL070 input section for ratios up to 400:1
2. 85 mm hollow bore diameter
3. Heavy duty cross-roller bearing
4. 4:1 output gear
5. Optimized motor mounting system with active centering on motor pilot guarantees alignment of motor

STH Series Model Code

STH - V L 7 - T - 1 0 0 - 2 - 1 9 H A 1 9

- **19HA19** — * Motor mounting code
- **2** — Backlash:
  STHVL: 2 arc-min
  STHEL: 3-4 arc-min
- **100** — Reduction ratio:
  STHVL 2-Stage and STHEL 3-Stage:
  12, 16, 20, 28, 40
  STHVL 3-Stage and STHEL 4-Stage:
  60, 80, 100, 120, 140, 160, 200. 280, 400
- **T** — EL7 Input drive direction:
  T: Top
  B: Bottom
  R: Right
  L: Left
- **L 7** — Input drive type:
  VL7: VRL-070
  EL7: EVL-070
- **STH** — Series

* Motor mounting code varies depending on the motor. Contact us to configure the code.

Input Drive Direction (EL7 Detail)

Top Facing (T)

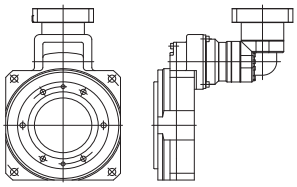

Bottom Facing (B)

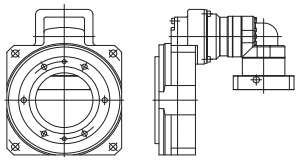

Right Facing (R)

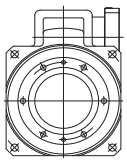

Left Facing (L)

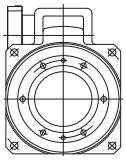

STHVL7 2-Stage & 3-Stage Specifications

Frame Size	**STHVL7**								
Stage	Units	Notes	**2-Stage**					**3-Stage**	
Ratio	--	*1	12:1	16:1	20:1	28:1	40:1	60:1	80:1
Nominal Torque	[Nm]	*2	65	85	85	85	68	68	85
Maximum Acceleration Torque	[Nm]	--	126	170	170	170	133	133	170
Emergency Stop Torque	[Nm]	--	240	240	240	240	240	240	240
Nominal Input Speed	[rpm]	--	3000					3000	
Maximum Input Speed	[rpm]	--	6000					6000	
Maximum Axial Load	[N]	--	4000					4000	
Maximum Radial Load	[N]	--	5000					5000	
Maximum Tilting Moment Load	[Nm]	--	200					200	
Maximum Surface Runout	[mm]	--	0.070					0.070	
Moment of Inertia (≤Ø 8)	[kgcm2]	*3	1.109	0.640	0.426	0.240	0.143	0.094	0.076
Moment of Inertia (≤Ø 14)	[kgcm2]	*3	1.189	0.715	0.509	0.318	0.227	0.179	0.152
Moment of Inertia (≤Ø 19)	[kgcm2]	*3	1.399	0.925	0.709	0.528	0.427	0.389	0.372
Efficiency	[%]	--	86	86	90	90	90	86	86
Maximum Torsional Backlash	[arc-min]	--	≤2					≤2	
Accuracy	[arc-sec]	--	±60					±60	
Torsional Stiffness	[Nm/arc-min]	--	7.6					7.6	
Noise Level	[dB]	--	72	72	65	65	65	65	65
Maximum Ambient Temperature	°C	--	0-40					0-40	
Permitted Housing Temperature	°C	--	90					90	
Protection Class	--	*4	IP54 (IP65)					IP54 (IP65)	
Weight	[kg]	--	7.6					7.8	

*1) Contact Nidec Drive Technology for special ratios

*2) At nominal input speed, service life is 20,000 hours

*3) Measured at input shaft

*4) IP65 (wash-down) is available as an option. Contact Nidec Drive Technology for more details and our food grade options

*5) L dimension varies depending on configuration

STHVL7 2-Stage & 3-Stage Dimensions

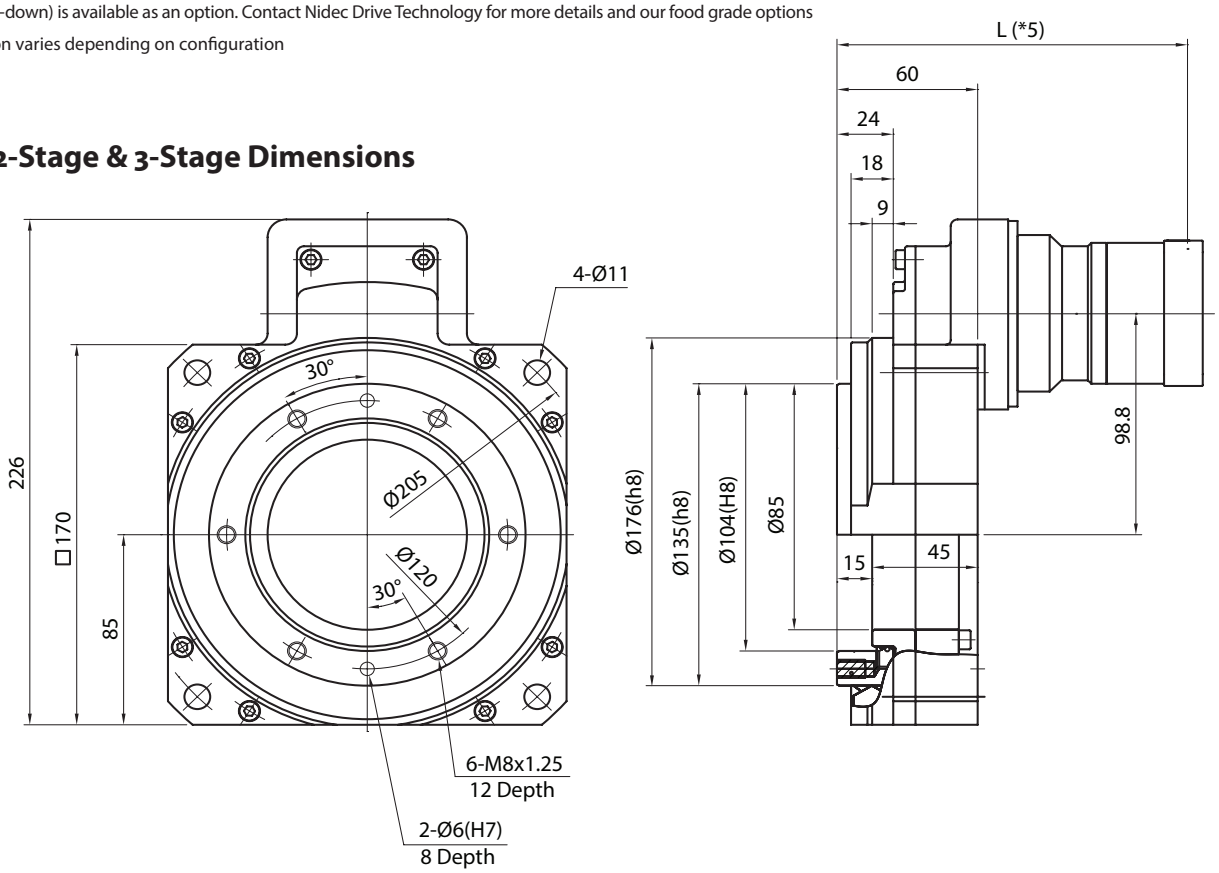

STHVL7 3-Stage Specifications

Frame Size	STHVL7								
Stage	Units	Notes	3-Stage						
Ratio	--	*1	100:1	120:1	140:1	160:1	200:1	280:1	400:1
Nominal Torque	[Nm]	*2	85	68	85	85	85	85	68
Maximum Acceleration Torque	[Nm]	--	170	133	170	170	170	170	133
Emergency Stop Torque	[Nm]	--	240	240	240	240	240	240	240
Nominal Input Speed	[rpm]	--	3000						
Maximum Input Speed	[rpm]	--	6000						
Maximum Axial Load	[N]	--	4000						
Maximum Radial Load	[N]	--	5000						
Maximum Tilting Moment Load	[Nm]	--	200						
Maximum Surface Runout	[mm]	--	0.070						
Moment of Inertia (≤Ø 8)	[kgcm2]	*3	0.067	0.059	0.060	0.054	0.052	0.051	0.050
Moment of Inertia (≤Ø 14)	[kgcm2]	*3	0.144	0.140	0.137	0.135	0.133	0.132	0.131
Moment of Inertia (≤Ø 19)	[kgcm2]	*3	0.364	0.350	0.357	0.345	0.343	0.342	0.341
Efficiency	[%]	--	86	86	86	86	86	86	86
Maximum Torsional Backlash	[arc-min]	--	≤2						
Accuracy	[arc-sec]	--	±60						
Torsional Stiffness	[Nm/arc-min]	--	7.6						
Noise Level	[dB]	--	65	65	65	65	65	65	65
Maximum Ambient Temperature	°C	--	0-40						
Permitted Housing Temperature	°C	--	90						
Protection Class	--	*4	IP54 (IP65)						
Weight	[kg]	--	7.8						

*1) Contact Nidec Drive Technology for special ratios

*2) At nominal input speed, service life is 20,000 hours

*3) Measured at input shaft

*4) IP65 (wash-down) is available as an option. Contact Nidec Drive Technology for more details and our food grade options

*5) L dimension varies depending on configuration

STHVL7 3-Stage Dimensions

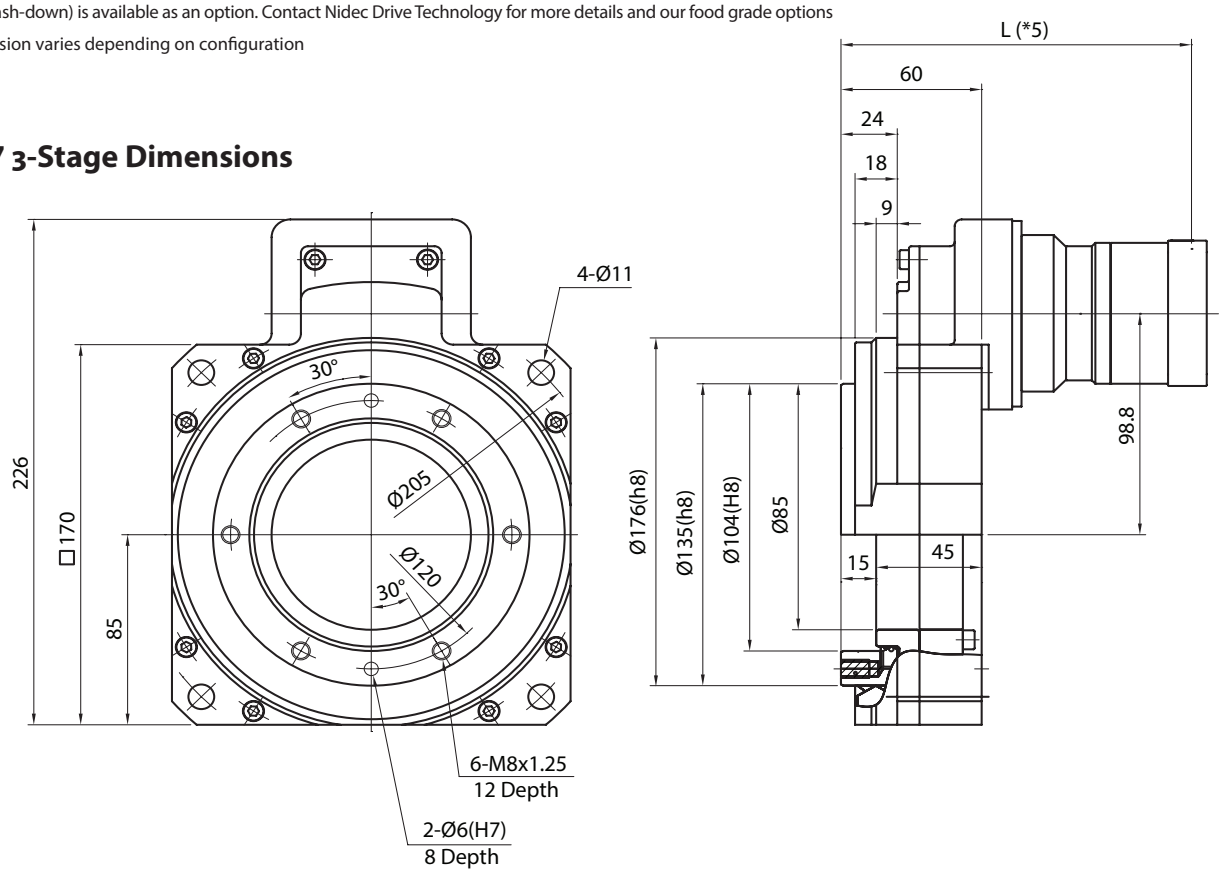

STHEL7 3-Stage & 4-Stage Specifications

Frame Size	**STHEL7**								
Stage	Units	Notes	**3-Stage**					**4-Stage**	
Ratio	--	*1	12:1	16:1	20:1	28:1	40:1	60:1	80:1
Nominal Torque	[Nm]	*2	43	58	84	85	61	61	85
Maximum Acceleration Torque	[Nm]	--	86	115	152	170	122	122	170
Emergency Stop Torque	[Nm]	--	180	234	240	240	204	240	240
Nominal Input Speed	[rpm]	--	3000					3000	
Maximum Input Speed	[rpm]	--	6000					6000	
Maximum Axial Load	[N]	--	4000					4000	
Maximum Radial Load	[N]	--	5000					5000	
Maximum Tilting Moment Load	[Nm]	--	200					200	
Maximum Surface Runout	[mm]	--	0.070					0.070	
Moment of Inertia (≤Ø 8)	[kgcm2]	*3	1.280	0.811	0.597	0.412	0.314	0.112	0.093
Moment of Inertia (≤Ø 14)	[kgcm2]	*3	1.355	0.886	0.672	0.487	0.389	0.157	0.138
Moment of Inertia (≤Ø 19)	[kgcm2]	*3	1.544	1.075	0.862	0.676	0.578	--	--
Efficiency	[%]	--	84	84	88	88	88	84	84
Maximum Torsional Backlash	[arc-min]	--	≤3					≤4	
Accuracy	[arc-sec]	--	±60					±60	
Torsional Stiffness	[Nm/arc-min]	--	7.6					7.6	
Noise Level	[dB]	--	72	72	65	65	65	65	65
Maximum Ambient Temperature	°C	--	0-40					0-40	
Permitted Housing Temperature	°C	--	90					90	
Protection Class	--	*4	IP54 (IP65)					IP54 (IP65)	
Weight	[kg]	--	8.0					8.2	

*1) Contact Nidec Drive Technology for special ratios

*2) At nominal input speed, service life is 20,000 hours

*3) Measured at input shaft

*4) IP65 (wash-down) is available as an option. Contact Nidec Drive Technology for more details and our food grade options

*5) L and M dimension varies depending on configuration

STHEL7 3-Stage & 4-Stage Dimensions

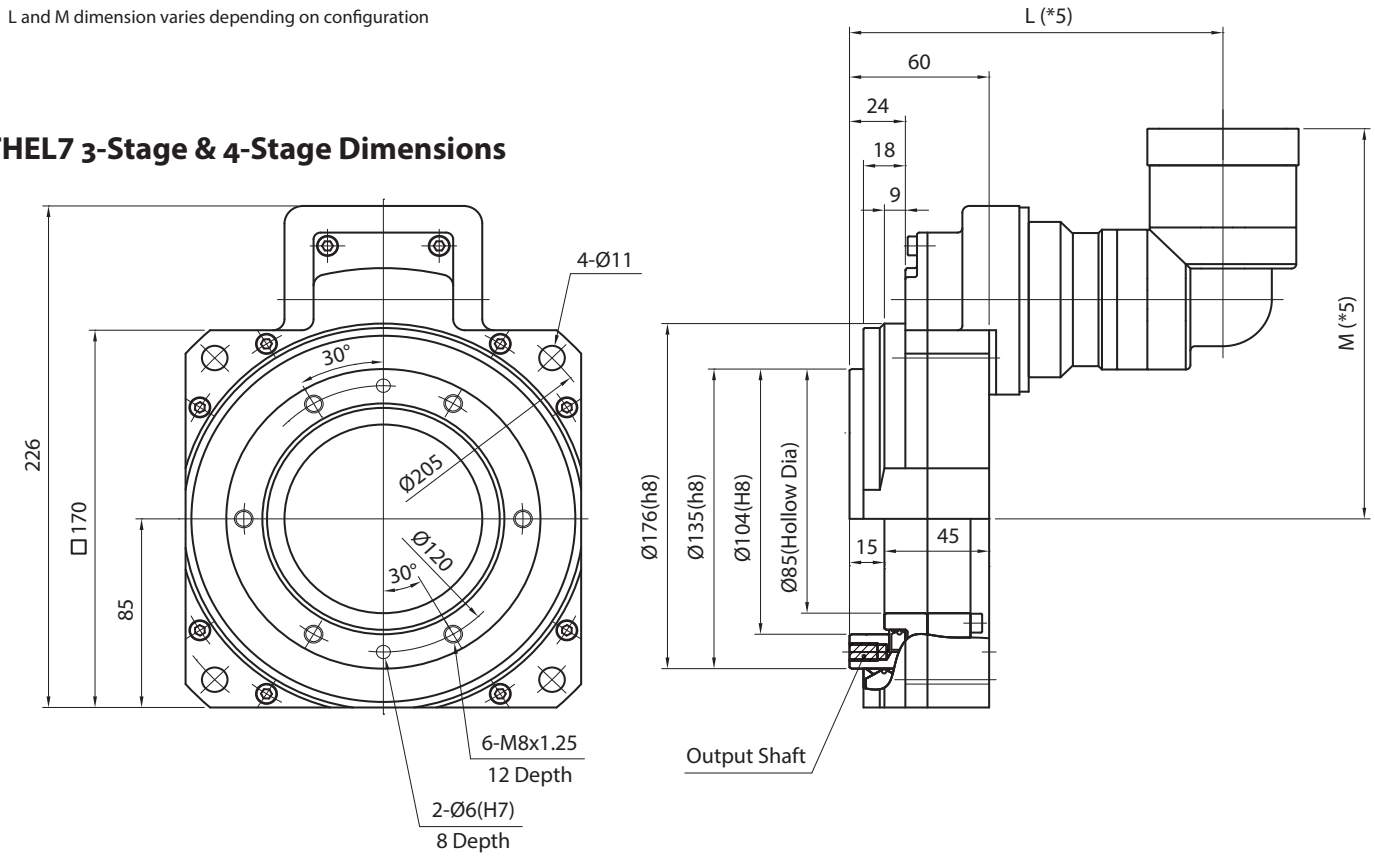

STHEL7 4-Stage Specifications

Frame Size	STHEL7								
Stage	Units	Notes	**4-Stage**						
Ratio	--	*1	100:1	120:1	140:1	160:1	200:1	280:1	400:1
Nominal Torque	[Nm]	*2	85	61	85	85	85	85	61
Maximum Acceleration Torque	[Nm]	--	170	122	170	170	170	170	122
Emergency Stop Torque	[Nm]	--	240	240	240	240	240	240	240
Nominal Input Speed	[rpm]	--	3000						
Maximum Input Speed	[rpm]	--	6000						
Maximum Axial Load	[N]	--	4000						
Maximum Radial Load	[N]	--	5000						
Maximum Tilting Moment Load	[Nm]	--	200						
Maximum Surface Runout	[mm]	--	0.070						
Moment of Inertia (≤Ø 8)	[kgcm2]	*3	0.085	0.072	0.077	0.066	0.064	0.063	0.062
Moment of Inertia (≤Ø 14)	[kgcm2]	*3	0.129	0.116	0.122	0.111	0.108	0.106	0.106
Moment of Inertia (≤Ø 19)	[kgcm2]	*3	--	--	--	--	--	--	--
Efficiency	[%]	--	84	84	84	84	84	84	84
Maximum Torsional Backlash	[arc-min]	--	≤4						
Accuracy	[arc-sec]	--	±60						
Torsional Stiffness	[Nm/arc-min]	--	7.6						
Noise Level	[dB]	--	65	65	65	65	65	65	65
Maximum Ambient Temperature	°C	--	0-40						
Permitted Housing Temperature	°C	--	90						
Protection Class	--	*4	IP54 (IP65)						
Weight	[kg]	--	8.2						

*1) Contact Nidec Drive Technology for special ratios

*2) At nominal input speed, service life is 20,000 hours

*3) Measured at input shaft

*4) IP65 (wash-down) is available as an option. Contact Nidec Drive Technology for more details and our food grade options

*5) L and M dimension varies depending on configuration

STHEL7 4-Stage Dimensions

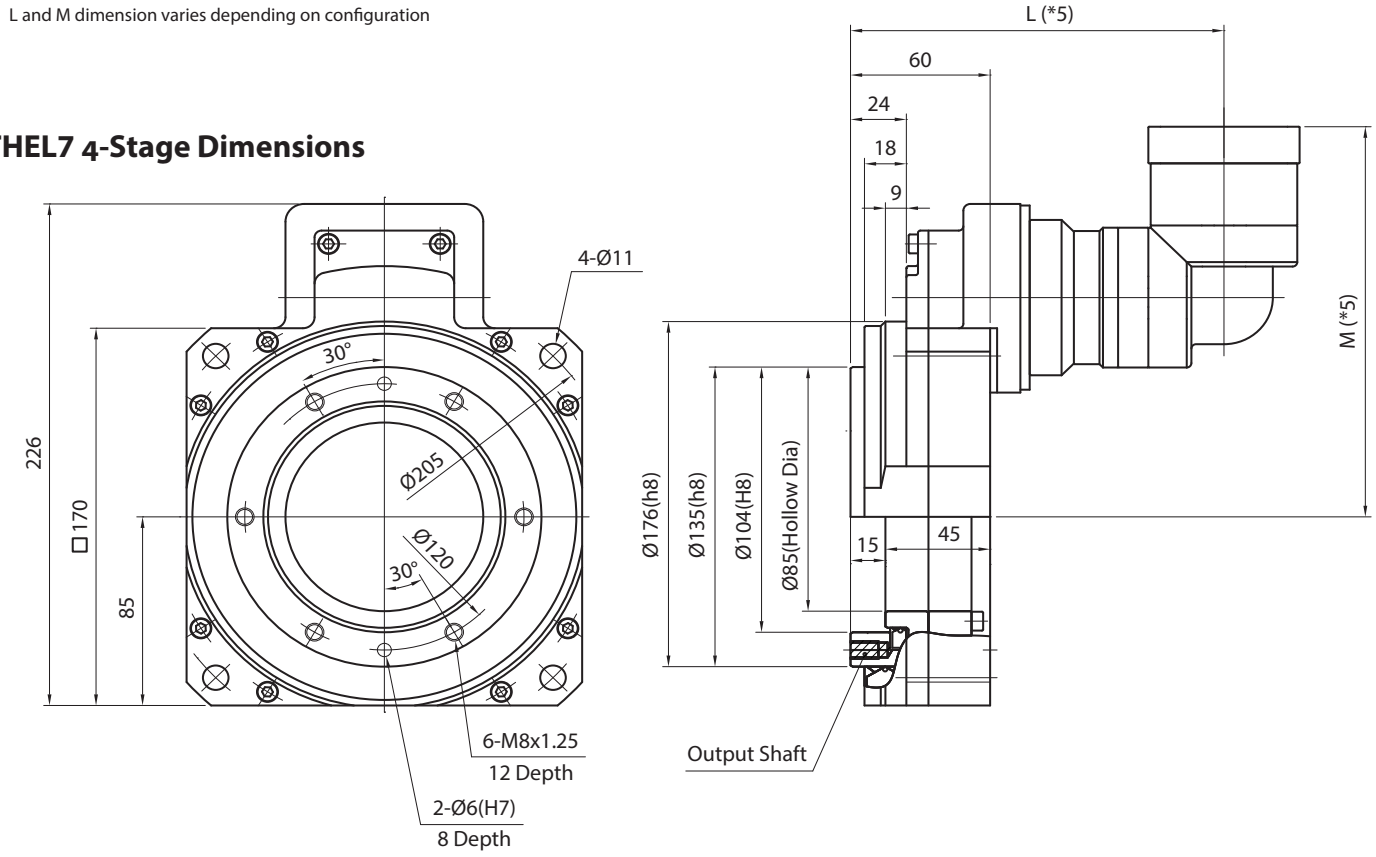

STH

STR SERIES

With factory automation equipment using servo systems, overall machine performance can be greatly affected if critical elements are not considered during the design phase. Factors, such as backlash can cause premature wear, vibration, inefficiency, poor rigidity and control instability. Long settling times can affect productivity and positioning accuracy. The STR series is our ultra high precision solution that addresses these concerns and offers proven mechanical reliability.

This versatile solution features programmable output motions with low-wear rolling contact. Larger inertia load transmission is achieved with internal cam ratio reduction while maintaining powerful torque with less motor horsepower. The STR's unique no-backlash preloaded mechanism improves the overall dynamics to force output motions to a new level of rigidity and accurate servo controller performance. The compact design reduces footprint while offering high speed rotation with large bending moment capacity.

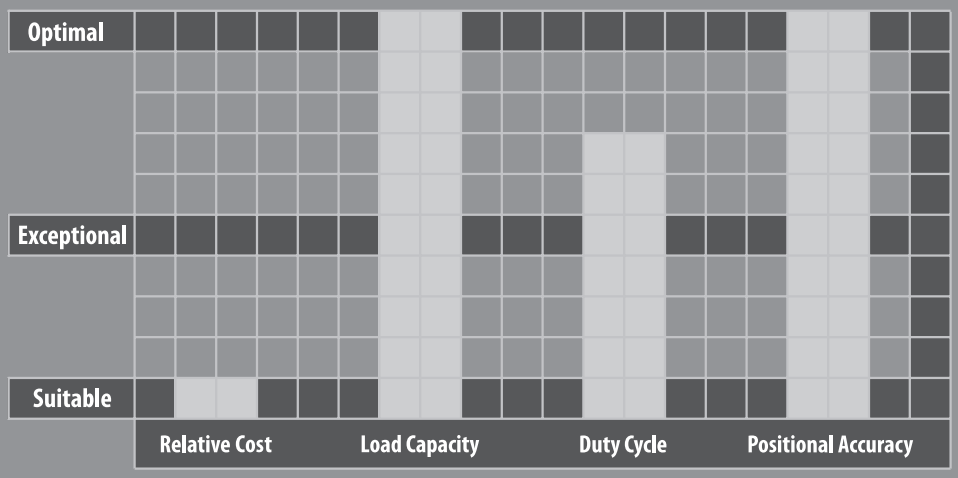

STR SERIES

- Zero Backlash – a unique preload mechanism to completely eliminate backlash and deliver motion that is true to input commands
- Highest level of positioning accuracy and runout accuracy, which is difficult to attain with other gearing technologies. Exceptional with direction reversing applications
- Output shaft is a solid piece cross roller bearing designed for durability against axial and radial loads
- Compatible with nearly any servomotor
- Reduction ratios up to 2000:1 are possible using a planetary primary stage
- Lightweight, compact aluminum alloy housing for minimal footprint
- Excellent fit for rotary pick and place applications, large dial tables and robotic joints
- Maintenance free solution using grease lubrication, can be mounted in any position

STR Series Features

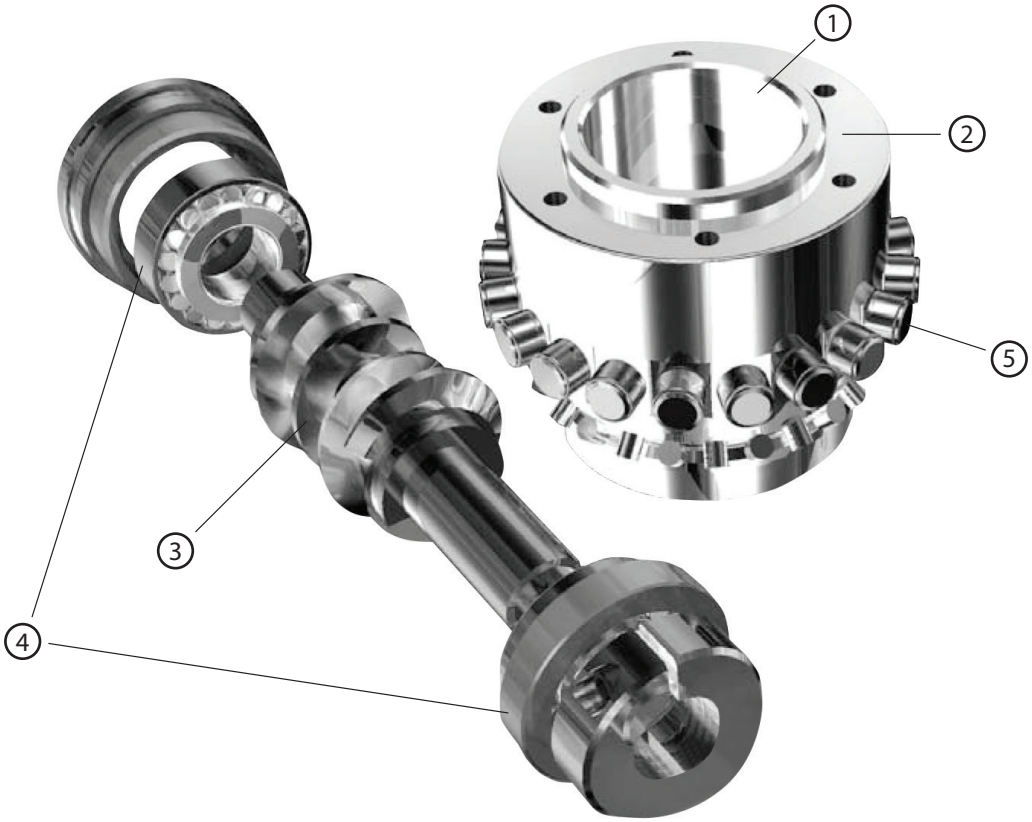

1. Oversized hollow output shaft
2. Turret with integral cross-roller bearing
3. Globoidal cam
4. Tapered roller bearings
5. Needle roller cam followers

STR Series Model Code

STR - E T R - 100 - 80 - 14BK12

- **STR** — Series
- **E** — Input gearbox:
  - N/A: None
  - E: EVB Right-angle
  - V: VRB Inline
- **T** — Input gearbox/motor mount side:
  - T: T – Surface
  - U: U – Surface
- **R** — Input gearbox mount direction (EVB only):
  - T: Top
  - B: Bottom
  - R: Right
  - L: Left
- **100** — Frame size:
  040, 063, 080,
  100, 125, 160, 250
- **80** — Reduction ratio:
  1-Stage:
  15, 20, 30

  2 and 3 Stage:
  45, 60, 75, 80, 100, 120, 135, 140, 160, 180, 200

  3 and 4 Stage:
  225, 300, 320, 375, 400, 500, 525, 560, 600, 700,
  800, 900, 1000, 1200, 1400, 1600, 1800, 2000
- **14BK12** — * Motor mounting code

* Motor mounting code varies depending on the motor.

STR 040V 1-Stage and 2-Stage Specifications with VRSF-B

Frame Size	**040V**					
Stage			**1-Stage**	**2-Stage**		
Ratio	Units	Notes	15	45	75	135
Nominal Torque	[Nm]	*1	27	27	27	27
Acceleration Torque	[Nm]	--	58	58	58	58
No Load Torque	[Nm]	*1	0.5	0.2	0.2	0.2
Nominal Input Speed	[rpm]	*2	900	2700	3000	3000
Maximum Input Speed	[rpm]	*2	3000	5000	5000	5000
Reflected Inertia (Single)	[kg-m²x10⁻⁴]	*3	0.292	--	--	--
Reflected Inertia (≤Ø 8)	[kg-m²x10⁻⁴]	*3	--	0.082	0.06	0.053
Reflected Inertia (≤Ø 14)	[kg-m²x10⁻⁴]	*3	--	0.151	0.131	0.121
Backlash	[arc-min]	--	0	0	0	0
Angular Transmission Accuracy	[arc-min]	--	≤ 1.5	≤ 1.5		
Angular Repeatability Accuracy	[arc-min]	--	± 0.2	± 0.2		
Surface Runout	[µm (max)]	--	10	10	10	10
Weight	[kg]	--	2.5	3.2	3.2	3.2
Maximum Axial Load	[N]	--	999	999	999	999
Maximum Radial Load	[N]	--	669	669	669	669
Maximum Tilting Moment Load	[Nm]	--	33	33	33	33
Efficiency	[%]	--	80	76	76	76
Protection Class	--	*4	IP54 (IP65)			

*1) At nominal input speed

*2) Speeds are at the actuator input. Limits when used with additional gearbox are higher

*3) At input shaft

*4) IP65 (wash-down) is available as an option. Contact Nidec Drive Technology for more details and our food grade options

STR 040 Dimensions with VRSF-B

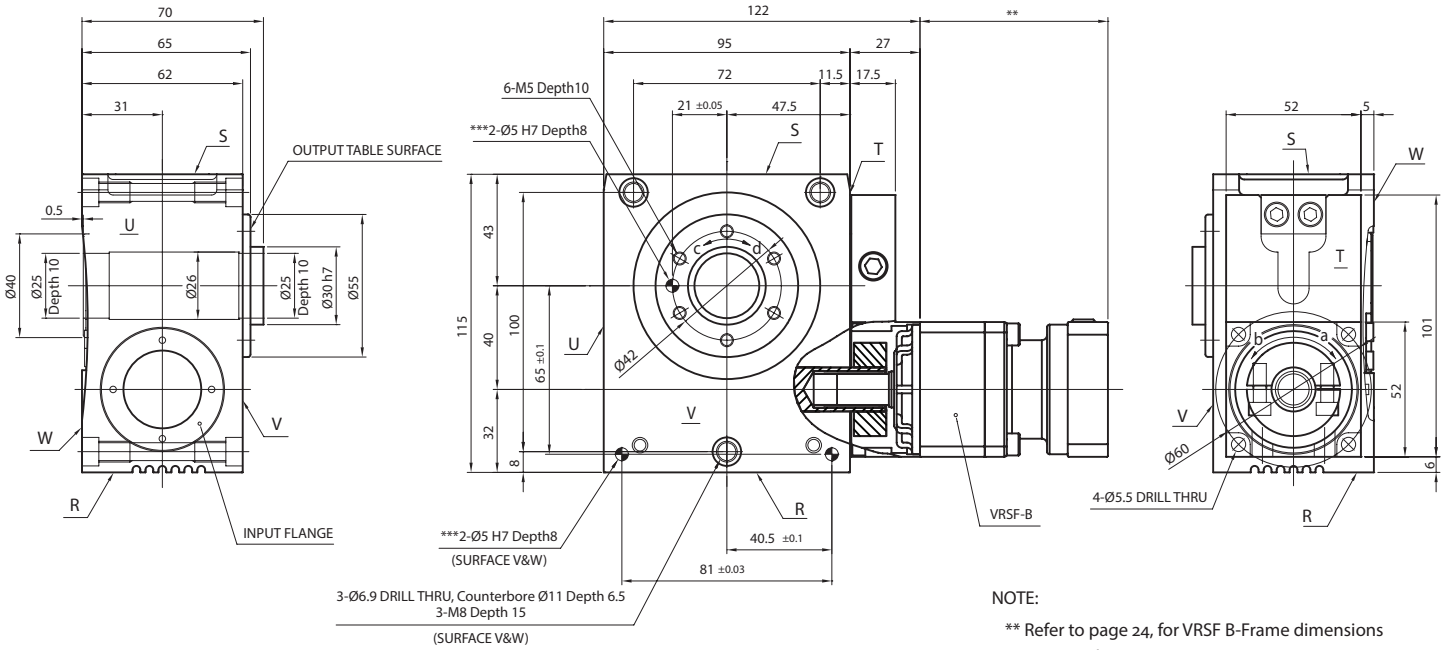

NOTE:

** Refer to page 24, for VRSF B-Frame dimensions

*** Optional

ROTATION:

a=d

a=c (upon special request)

STR 040V 3-Stage Specifications with VRSF-B

Frame Size	**040V**					
Stage	**3-Stage**					
Ratio	Units	Notes	225	300	375	525
Nominal Torque	[Nm]	*1	27	27	27	27
Acceleration Torque	[Nm]	--	58	58	58	58
No Load Torque	[Nm]	*1	0.1	0.1	0.1	0.1
Nominal Input Speed	[rpm]	*2	3000	3000	3000	3000
Maximum Input Speed	[rpm]	*2	5000	5000	5000	5000
Reflected Inertia (Single)	[kg-m^{2}x10^{-4}]	*3	--	--	--	--
Reflected Inertia (≤Ø 8)	[kg-m^{2}x10^{-4}]	*3	0.058	0.057	0.057	0.053
Reflected Inertia (≤Ø 14)	[kg-m^{2}x10^{-4}]	*3	0.131	0.131	0.131	0.121
Backlash	[arc-min]	--	0	0	0	0
Angular Transmission Accuracy	[arc-min]	--	≤ 1.5			
Angular Repeatability Accuracy	[arc-min]	--	± 0.2			
Surface Runout	[µm (max)]	--	10	10	10	10
Weight	[kg]	--	3.4	3.4	3.4	3.4
Maximum Axial Load	[N]	--	999	999	999	999
Maximum Radial Load	[N]	--	669	669	669	669
Maximum Tilting Moment Load	[Nm]	--	33	33	33	33
Efficiency	[%]	--	72	72	72	72
Protection Class	--	*4	IP54 (IP65)			

*1) At nominal input speed

*2) Speeds are at the actuator input. Limits when used with additional gearbox are higher

*3) At input shaft

*4) IP65 (wash-down) is available as an option. Contact Nidec Drive Technology for more details and our food grade options

STR 040 Dimensions with VRSF-B

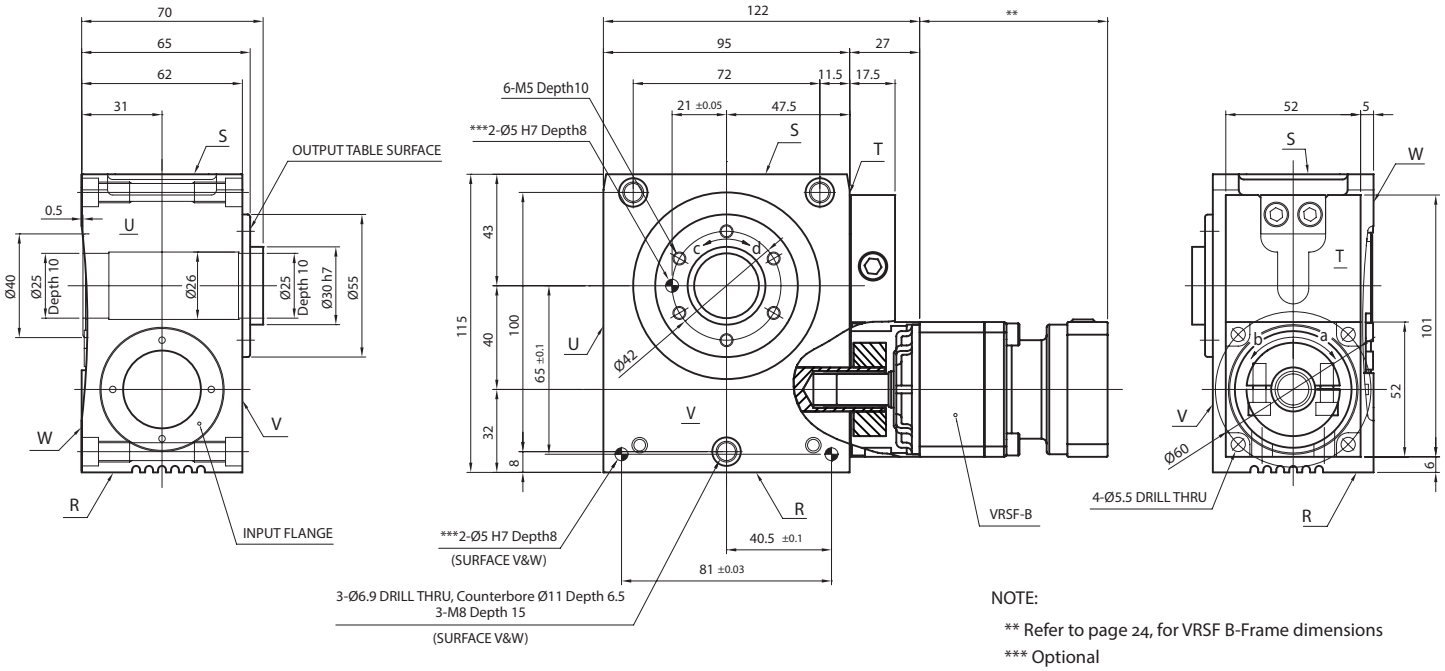

NOTE:

** Refer to page 24, for VRSF B-Frame dimensions

*** Optional

ROTATION:

a=d

a=c (upon special request)

STR

STR 063V 1-Stage and 2-Stage Specifications with VRB 060

Frame Size			**063V**							
Stage			**1-Stage**	**2-Stage**						
Ratio	Units	Notes	20	60	80	100	120	140	160	180
Nominal Torque	[Nm]	*1	69	69	69	69	69	69	69	69
Acceleration Torque	[Nm]	--	129	129	129	129	129	129	129	129
No Load Torque	[Nm]	*1	0.8	0.1	0.1	0.1	0.1	0.1	0.1	0.1
Nominal Input Speed	[rpm]	*2	800	2400	3000	3000	3000	3000	3000	3000
Maximum Input Speed	[rpm]	*2	3000	6000	6000	6000	6000	6000	6000	6000
Reflected Inertia (Single)	[kg-m^{2}x10^{-4}]	*3	0.862	--	--	--	--	--	--	--
Reflected Inertia (≤Ø 8)	[kg-m^{2}x10^{-4}]	*3	--	0.142	0.097	0.079	0.070	0.064	0.061	0.059
Reflected Inertia (≤Ø 14)	[kg-m^{2}x10^{-4}]	*3	--	0.222	0.172	0.162	0.152	0.142	0.142	0.142
Reflected Inertia (≤Ø 19)	[kg-m^{2}x10^{-4}]	*3	--	0.432	0.382	0.362	0.362	0.352	0.352	0.342
Backlash	[arc-min]	--	0	0	0	0	0	0	0	0
Angular Transmission Accuracy	[arc-min]	--	≤ 1.0	≤ 1.0						
Angular Repeatability Accuracy	[arc-min]	--	± 0.1	± 0.1						
Surface Runout	[µm (max)]	--	10	10	10	10	10	10	10	10
Weight	[kg]	--	5.6	7.0	7.0	7.0	7.0	7.0	7.0	7.0
Maximum Axial Load	[N]	--	1657	1657	1657	1657	1657	1657	1657	1657
Maximum Radial Load	[N]	--	1359	1359	1359	1359	1359	1359	1359	1359
Maximum Tilting Moment Load	[Nm]	--	79	79	79	79	79	79	79	79
Efficiency	[%]	--	82	78	78	78	78	78	78	78
Protection Class	--	*4	IP54 (IP65)							

*1) At nominal input speed
*2) Speeds are at the actuator input. Limits when used with additional gearbox are higher
*3) At input shaft
*4) IP65 (wash-down) is available as an option. Contact Nidec Drive Technology for more details and our food grade options

STR 063V 2-Stage and 3-Stage Specifications with VRB 060

Frame Size			**063V**							
Stage			**2-Stage**	**3-Stage**						
Ratio	Units	Notes	200	300	320	400	500	560	600	700
Nominal Torque	[Nm]	*1	69	69	69	69	69	69	69	69
Acceleration Torque	[Nm]	--	129	129	129	129	129	129	129	129
No Load Torque	[Nm]	*1	0.1	0.1	0.1	0.1	0.1	0.1	0.1	0.1
Nominal Input Speed	[rpm]	*2	3000	3000	3000	3000	3000	3000	3000	3000
Maximum Input Speed	[rpm]	*2	6000	6000	6000	6000	6000	6000	6000	6000
Reflected Inertia (Single)	[kg-m^{2}x10^{-4}]	*3	--	--	--	--	--	---	---	---
Reflected Inertia (≤Ø 8)	[kg-m^{2}x10^{-4}]	*3	0.058	0.057	0.059	0.056	0.055	0.057	0.051	0.055
Reflected Inertia (≤Ø 14)	[kg-m^{2}x10^{-4}]	*3	0.142	0.142	0.142	0.132	0.132	0.142	0.132	0.132
Reflected Inertia (≤Ø 19)	[kg-m^{2}x10^{-4}]	*3	0.342	0.352	0.362	0.352	0.352	0.362	0.342	0.352
Backlash	[arc-min]	--	0	0	0	0	0	0	0	0
Angular Transmission Accuracy	[arc-min]	--	≤ 1.0	≤ 1.0						
Angular Repeatability Accuracy	[arc-min]	--	± 0.1	± 0.1						
Surface Runout	[µm (max)]	--	10	10	10	10	10	10	10	10
Weight	[kg]	--	7.0	7.2	7.2	7.2	7.2	7.2	7.2	7.2
Maximum Axial Load	[N]	--	1657	1657	1657	1657	1657	1657	1657	1657
Maximum Radial Load	[N]	--	1359	1359	1359	1359	1359	1359	1359	1359
Maximum Tilting Moment Load	[Nm]	--	79	79	79	79	79	79	79	79
Efficiency	[%]	--	78	74	74	74	74	74	74	74
Protection Class	--	*4	IP54 (IP65)							

*1) At nominal input speed
*2) Speeds are at the actuator input. Limits when used with additional gearbox are higher
*3) At input shaft
*4) IP65 (wash-down) is available as an option. Contact Nidec Drive Technology for more details and our food grade options

STR 063V 3-Stage Specifications with VRB 060

Frame Size	063V									
Stage	**3-Stage**									
Ratio	Units	Notes	800	900	1000	1200	1400	1600	1800	2000
Nominal Torque	[Nm]	*1	69	69	69	69	69	69	69	69
Acceleration Torque	[Nm]	--	129	129	129	129	129	129	129	129
No Load Torque	[Nm]	*1	0.1	0.1	0.1	0.1	0.1	0.1	0.1	0.1
Nominal Input Speed	[rpm]	*2	3000	3000	3000	3000	3000	3000	3000	3000
Maximum Input Speed	[rpm]	*2	6000	6000	6000	6000	6000	6000	6000	6000
Reflected Inertia (Single)	[kg-m^{2}x10^{-4}]	*3	---	---	---	---	---	---	---	---
Reflected Inertia (≤Ø 8)	[kg-m^{2}x10^{-4}]	*3	0.051	0.055	0.051	0.051	0.051	0.051	0.051	0.051
Reflected Inertia (≤Ø 14)	[kg-m^{2}x10^{-4}]	*3	0.132	0.132	0.132	0.132	0.132	0.132	0.132	0.132
Reflected Inertia (≤Ø 19)	[kg-m^{2}x10^{-4}]	*3	0.342	0.352	0.342	0.342	0.342	0.342	0.342	0.342
Backlash	[arc-min]	--	0	0	0	0	0	0	0	0
Angular Transmission Accuracy	[arc-min]	--	≤ 1.0							
Angular Repeatability Accuracy	[arc-min]	--	± 0.1							
Surface Runout	[µm (max)]	--	10	10	10	10	10	10	10	10
Weight	[kg]	--	7.2	7.2	7.2	7.2	7.2	7.2	7.2	7.2
Maximum Axial Load	[N]	--	1657	1657	1657	1657	1657	1657	1657	1657
Maximum Radial Load	[N]	--	1359	1359	1359	1359	1359	1359	1359	1359
Maximum Tilting Moment Load	[Nm]	--	79	79	79	79	79	79	79	79
Efficiency	[%]	--	74	74	74	74	74	74	74	74
Protection Class	--	*4	IP54 (IP65)							

*1) At nominal input speed
*2) Speeds are at the actuator input. Limits when used with additional gearbox are higher
*3) At input shaft
*4) IP65 (wash-down) is available as an option. Contact Nidec Drive Technology for more details and our food grade options

STR 063 Dimensions with VRB 060

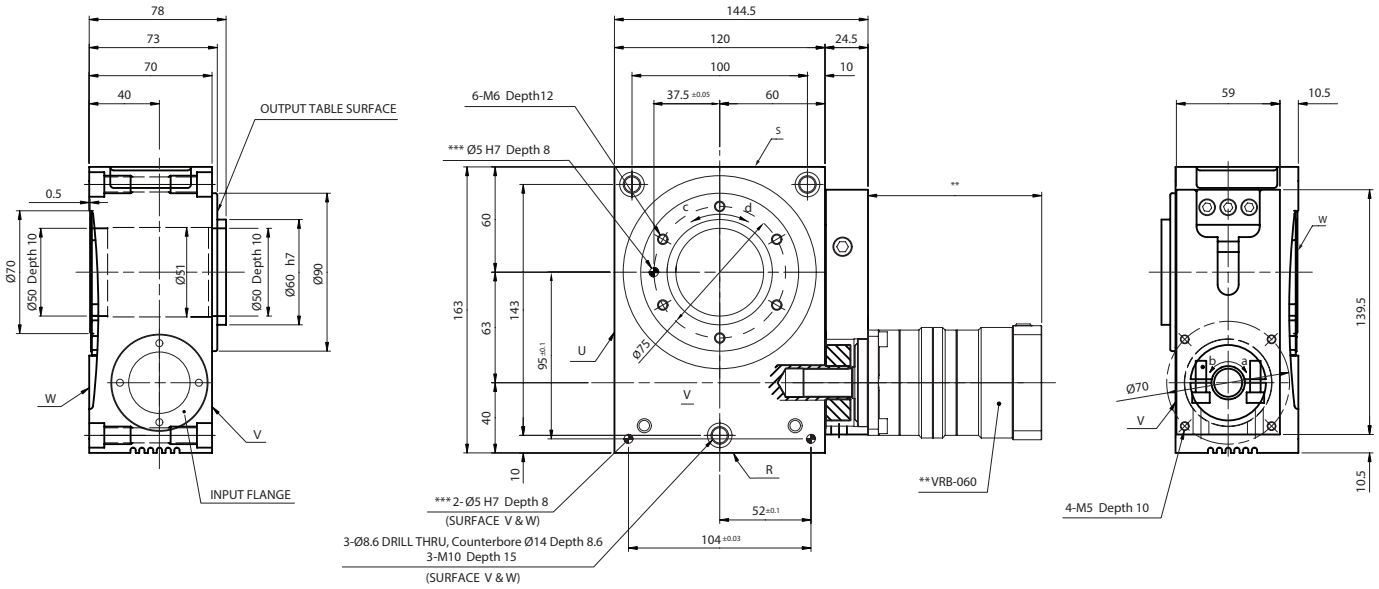

NOTE:

** Refer to page 70, for VRB-060 dimensions
*** Optional

ROTATION:

a=d
a=c (upon special request)

STR

STR 063E 1-Stage and 2-Stage Specifications with EVB 060

Frame Size			**063E**							
Stage			**1-Stage**	**2-Stage**						
Ratio	Units	Notes	20	60	80	100	120	140	160	180
Nominal Torque	[Nm]	*1	69	69	69	69	69	69	69	69
Acceleration Torque	[Nm]	--	129	129	129	129	129	129	129	129
No Load Torque	[Nm]	*1	0.8	0.4	0.4	0.4	0.4	0.4	0.4	0.4
Nominal Input Speed	[rpm]	*2	800	2400	3000	3000	3000	3000	3000	3000
Maximum Input Speed	[rpm]	*2	3000	6000	6000	6000	6000	6000	6000	6000
Reflected Inertia (Single)	[kg-m^{2}x10^{-4}]	*3	0.862	--	--	--	--	--	--	--
Reflected Inertia (≤Ø 8)	[kg-m^{2}x10^{-4}]	*3	--	0.311	0.266	0.248	0.239	0.234	0.230	0.228
Reflected Inertia (≤Ø 14)	[kg-m^{2}x10^{-4}]	*3	--	0.386	0.341	0.323	0.314	0.309	0.305	0.303
Reflected Inertia (≤Ø 19)	[kg-m^{2}x10^{-4}]	*3	--	0.575	0.53	0.513	0.504	0.498	0.495	0.493
Backlash	[arc-min]	--	0	0	0	0	0	0	0	0
Angular Transmission Accuracy	[arc-min]	--	≤ 1.0	≤ 1.0						
Angular Repeatability Accuracy	[arc-min]	--	± 0.1	± 0.1						
Surface Runout	[µm (max)]	--	10	10	10	10	10	10	10	10
Weight	[kg]	--	5.6	7.4	7.4	7.4	7.4	7.4	7.4	7.4
Maximum Axial Load	[N]	--	1657	1657	1657	1657	1657	1657	1657	1657
Maximum Radial Load	[N]	--	1359	1359	1359	1359	1359	1359	1359	1359
Maximum Tilting Moment Load	[Nm]	--	79	79	79	79	79	79	79	79
Efficiency	[%]	--	82	74	74	74	74	74	74	74
Protection Class	--	*4	IP54 (IP65)							

*1) At nominal input speed
*2) Speeds are at the actuator input. Limits when used with additional gearbox are higher
*3) At input shaft
*4) IP65 (wash-down) is available as an option. Contact Nidec Drive Technology for more details and our food grade options

STR 063E 2-Stage and 3-Stage Specifications with EVB 060

Frame Size			**063E**							
Stage			**2-Stage**	**3-Stage**						
Ratio	Units	Notes	200	300	320	400	500	560	600	700
Nominal Torque	[Nm]	*1	69	69	69	69	69	69	69	69
Acceleration Torque	[Nm]	--	129	129	129	129	129	129	129	129
No Load Torque	[Nm]	*1	0.4	0.2	0.2	0.2	0.2	0.2	0.2	0.2
Nominal Input Speed	[rpm]	*2	3000	3000	3000	3000	3000	3000	3000	3000
Maximum Input Speed	[rpm]	*2	6000	6000	6000	6000	6000	6000	6000	6000
Reflected Inertia (Single)	[kg-m^{2}x10^{-4}]	*3	--	--	--	--	--	--	--	--
Reflected Inertia (≤Ø 8)	[kg-m^{2}x10^{-4}]	*3	0.227	0.073	0.079	0.071	0.071	0.077	0.062	0.07
Reflected Inertia (≤Ø 14)	[kg-m^{2}x10^{-4}]	*3	0.302	0.118	0.124	0.116	0.115	0.122	0.106	0.115
Reflected Inertia (≤Ø 19)	[kg-m^{2}x10^{-4}]	*3	0.491	--	--	--	--	--	--	--
Backlash	[arc-min]	--	0	0	0	0	0	0	0	0
Angular Transmission Accuracy	[arc-min]	--	≤ 1.0	≤ 1.0						
Angular Repeatability Accuracy	[arc-min]	--	± 0.1	± 0.1						
Surface Runout	[µm (max)]	--	10	10	10	10	10	10	10	10
Weight	[kg]	--	7.4	7.2	7.2	7.2	7.2	7.2	7.2	7.2
Maximum Axial Load	[N]	--	1657	1657	1657	1657	1657	1657	1657	1657
Maximum Radial Load	[N]	--	1359	1359	1359	1359	1359	1359	1359	1359
Maximum Tilting Moment Load	[Nm]	--	79	79	79	79	79	79	79	79
Efficiency	[%]	--	74	70	70	70	70	70	70	70
Protection Class	--	*4	IP54 (IP65)							

*1) At nominal input speed
*2) Speeds are at the actuator input. Limits when used with additional gearbox are higher
*3) At input shaft
*4) IP65 (wash-down) is available as an option. Contact Nidec Drive Technology for more details and our food grade options

STR 063E 3-Stage Specifications with EVB 060

Frame Size	063E									
Stage	**3-Stage**									
Ratio	Units	Notes	800	900	1000	1200	1400	1600	1800	2000
Nominal Torque	[Nm]	*1	69	69	69	69	69	69	69	69
Acceleration Torque	[Nm]	--	129	129	129	129	129	129	129	129
No Load Torque	[Nm]	*1	0.2	0.2	0.2	0.2	0.2	0.2	0.2	0.2
Nominal Input Speed	[rpm]	*2	3000	3000	3000	3000	3000	3000	3000	3000
Maximum Input Speed	[rpm]	*2	6000	6000	6000	6000	6000	6000	6000	6000
Reflected Inertia (Single)	[kg-m^{2}x10^{-4}]	*3	--	--	--	--	--	--	--	--
Reflected Inertia (≤Ø 8)	[kg-m^{2}x10^{-4}]	*3	0.061	0.07	0.061	0.061	0.061	0.061	0.061	0.061
Reflected Inertia (≤Ø 14)	[kg-m^{2}x10^{-4}]	*3	0.106	0.115	0.106	0.106	0.105	0.105	0.105	0.105
Reflected Inertia (≤Ø 19)	[kg-m^{2}x10^{-4}]	*3	--	--	--	--	--	--	--	--
Backlash	[arc-min]	--	0	0	0	0	0	0	0	0
Angular Transmission Accuracy	[arc-min]	--	≤ 1.0							
Angular Repeatability Accuracy	[arc-min]	--	± 0.1							
Surface Runout	[µm (max)]	--	10	10	10	10	10	10	10	10
Weight	[kg]	--	7.2	7.2	7.2	7.2	7.2	7.2	7.2	7.2
Maximum Axial Load	[N]	--	1657	1657	1657	1657	1657	1657	1657	1657
Maximum Radial Load	[N]	--	1359	1359	1359	1359	1359	1359	1359	1359
Maximum Tilting Moment Load	[Nm]	--	79	79	79	79	79	79	79	79
Efficiency	[%]	--	70	70	70	70	70	70	70	70
Protection Class	--	*4	IP54 (IP65)							

*1) At nominal input speed
*2) Speeds are at the actuator input. Limits when used with additional gearbox are higher
*3) At input shaft
*4) IP65 (wash-down) is available as an option. Contact Nidec Drive Technology for more details and our food grade options

STR 063 Dimensions with EVB 060

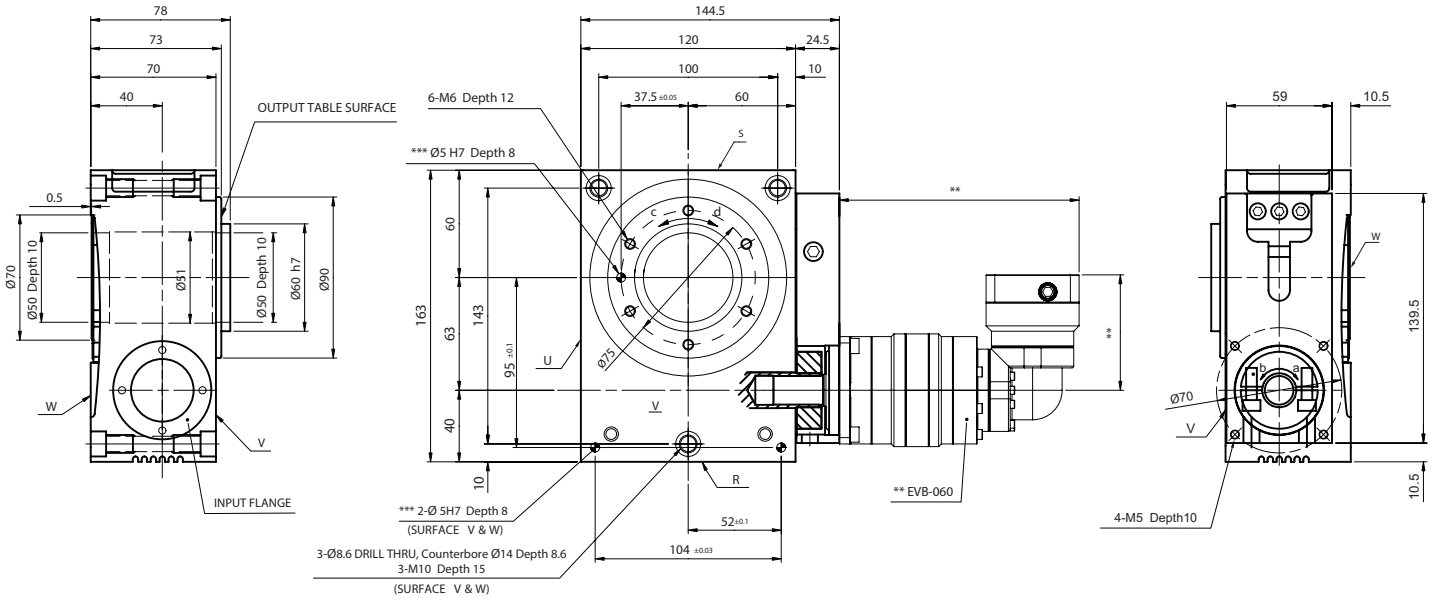

NOTE:
** Refer to page 214, for EVB-060 dimensions
*** Optional

ROTATION:
a=d
a=c (upon special request)

STR

STR 080V 1-Stage and 2-Stage Specifications with VRB 060

Frame Size			**080V**							
Stage			**1-Stage**	**2-Stage**						
Ratio	Units	Notes	20	60	80	100	120	140	160	180
Nominal Torque	[Nm]	*1	113	113	113	113	113	113	113	113
Acceleration Torque	[Nm]	--	202	202	202	202	202	202	202	202
No Load Torque	[Nm]	*1	1.3	0.1	0.1	0.1	0.1	0.1	0.1	0.1
Nominal Input Speed	[rpm]	*2	700	2100	2800	3000	3000	3000	3000	3000
Maximum Input Speed	[rpm]	*2	2500	6000	6000	6000	6000	6000	6000	6000
Reflected Inertia (Single)	[kg-m^{2}x10^{-4}]	*3	3.066	--	--	--	--	--	--	--
Reflected Inertia (≤Ø 8)	[kg-m^{2}x10^{-4}]	*3	--	0.148	0.103	0.085	0.076	0.070	0.067	0.065
Reflected Inertia (≤Ø 14)	[kg-m^{2}x10-4]	*3	--	0.228	0.178	0.168	0.158	0.148	0.148	0.148
Reflected Inertia (≤Ø 19)	[kg-m^{2}x10^{-4}]	*3	--	0.438	0.388	0.368	0.368	0.358	0.358	0.348
Backlash	[arc-min]	--	0	0	0	0	0	0	0	0
Angular Transmission Accuracy	[arc-min]	--	≤ 0.7	≤ 0.7						
Angular Repeatability Accuracy	[arc-min]	--	± 0.08	± 0.08						
Surface Runout	[µm (max)]	--	10	10	10	10	10	10	10	10
Weight	[kg]	--	11.6	13.0	13.0	13.0	13.0	13.0	13.0	13.0
Maximum Axial Load	[N]	--	3302	3302	3302	3302	3302	3302	3302	3302
Maximum Radial Load	[N]	--	2819	2819	2819	2819	2819	2819	2819	2819
Maximum Tilting Moment Load	[Nm]	--	210	210	210	210	210	210	210	210
Efficiency	[%]	--	80	76	76	76	76	76	76	76
Protection Class	--	*4	IP54 (IP65)							

*1) At nominal input speed
*2) Speeds are at the actuator input. Limits when used with additional gearbox are higher
*3) At input shaft
*4) IP65 (wash-down) is available as an option. Contact Nidec Drive Technology for more details and our food grade options

STR 080V 2-Stage and 3-Stage Specifications with VRB 060

Frame Size			**080V**							
Stage			**2-Stage**	**3-Stage**						
Ratio	Units	Notes	200	300	320	400	500	560	600	700
Nominal Torque	[Nm]	*1	113	113	113	113	113	113	113	113
Acceleration Torque	[Nm]	--	202	202	202	202	202	202	202	202
No Load Torque	[Nm]	*1	0.1	0.1	0.1	0.1	0.1	0.1	0.1	0.1
Nominal Input Speed	[rpm]	*2	3000	3000	3000	3000	3000	3000	3000	3000
Maximum Input Speed	[rpm]	*2	6000	6000	6000	6000	6000	6000	6000	6000
Reflected Inertia (Single)	[kg-m^{2}x10^{-4}]	*3	--	--	--	--	--	--	--	--
Reflected Inertia (≤Ø 8)	[kg-m^{2}x10^{-4}]	*3	0.064	0.063	0.065	0.062	0.061	0.063	0.057	0.061
Reflected Inertia (≤Ø 14)	[kg-m^{2}x10-4]	*3	0.148	0.148	0.148	0.138	0.138	0.148	0.138	0.138
Reflected Inertia (≤Ø 19)	[kg-m^{2}x10^{-4}]	*3	0.348	0.358	0.368	0.358	0.358	0.368	0.348	0.358
Backlash	[arc-min]	--	0	0	0	0	0	0	0	0
Angular Transmission Accuracy	[arc-min]	--	≤ 0.7	≤ 0.7						
Angular Repeatability Accuracy	[arc-min]	--	± 0.08	± 0.08						
Surface Runout	[µm (max)]	--	10	10	10	10	10	10	10	10
Weight	[kg]	--	13.0	13.2	13.2	13.2	13.2	13.2	13.2	13.2
Maximum Axial Load	[N]	--	3302	3302	3302	3302	3302	3302	3302	3302
Maximum Radial Load	[N]	--	2819	2819	2819	2819	2819	2819	2819	2819
Maximum Tilting Moment Load	[Nm]	--	210	210	210	210	210	210	210	210
Efficiency	[%]	--	76	72	72	72	72	72	72	72
Protection Class	--	*4	IP54 (IP65)							

*1) At nominal input speed
*2) Speeds are at the actuator input. Limits when used with additional gearbox are higher
*3) At input shaft
*4) IP65 (wash-down) is available as an option. Contact Nidec Drive Technology for more details and our food grade options

STR 080V 3-Stage Specifications with VRB 060

Frame Size	080V									
Stage	**3-Stage**									
Ratio	Units	Notes	800	900	1000	1200	1400	1600	1800	2000
Nominal Torque	[Nm]	*1	113	113	113	113	113	113	113	113
Acceleration Torque	[Nm]	--	202	202	202	202	202	202	202	202
No Load Torque	[Nm]	*1	0.1	0.1	0.1	0.1	0.1	0.1	0.1	0.1
Nominal Input Speed	[rpm]	*2	3000	3000	3000	3000	3000	3000	3000	3000
Maximum Input Speed	[rpm]	*2	6000	6000	6000	6000	6000	6000	6000	6000
Reflected Inertia (Single)	[kg-m^{2}x10^{-4}]	*3	--	--	--	--	--	--	--	--
Reflected Inertia (≤Ø 8)	[kg-m^{2}x10^{-4}]	*3	0.057	0.061	0.057	0.057	0.057	0.057	0.057	0.057
Reflected Inertia (≤Ø 14)	[kg-m^{2}x10-4]	*3	0.138	0.138	0.138	0.138	0.138	0.138	0.138	0.138
Reflected Inertia (≤Ø 19)	[kg-m^{2}x10^{-4}]	*3	0.348	0.358	0.348	0.348	0.348	0.348	0.348	0.348
Backlash	[arc-min]	--	0	0	0	0	0	0	0	0
Angular Transmission Accuracy	[arc-min]	--	≤ 0.7							
Angular Repeatability Accuracy	[arc-min]	--	± 0.08							
Surface Runout	[µm (max)]	--	10	10	10	10	10	10	10	10
Weight	[kg]	--	13.2	13.2	13.2	13.2	13.2	13.2	13.2	13.2
Maximum Axial Load	[N]	--	3302	3302	3302	3302	3302	3302	3302	3302
Maximum Radial Load	[N]	--	2819	2819	2819	2819	2819	2819	2819	2819
Maximum Tilting Moment Load	[Nm]	--	210	210	210	210	210	210	210	210
Efficiency	[%]	--	72	72	72	72	72	72	72	72
Protection Class	--	*4	IP54 (IP65)							

*1) At nominal input speed
*2) Speeds are at the actuator input. Limits when used with additional gearbox are higher
*3) At input shaft
*4) IP65 (wash-down) is available as an option. Contact Nidec Drive Technology for more details and our food grade options

STR 080V Dimensions with VRB 060

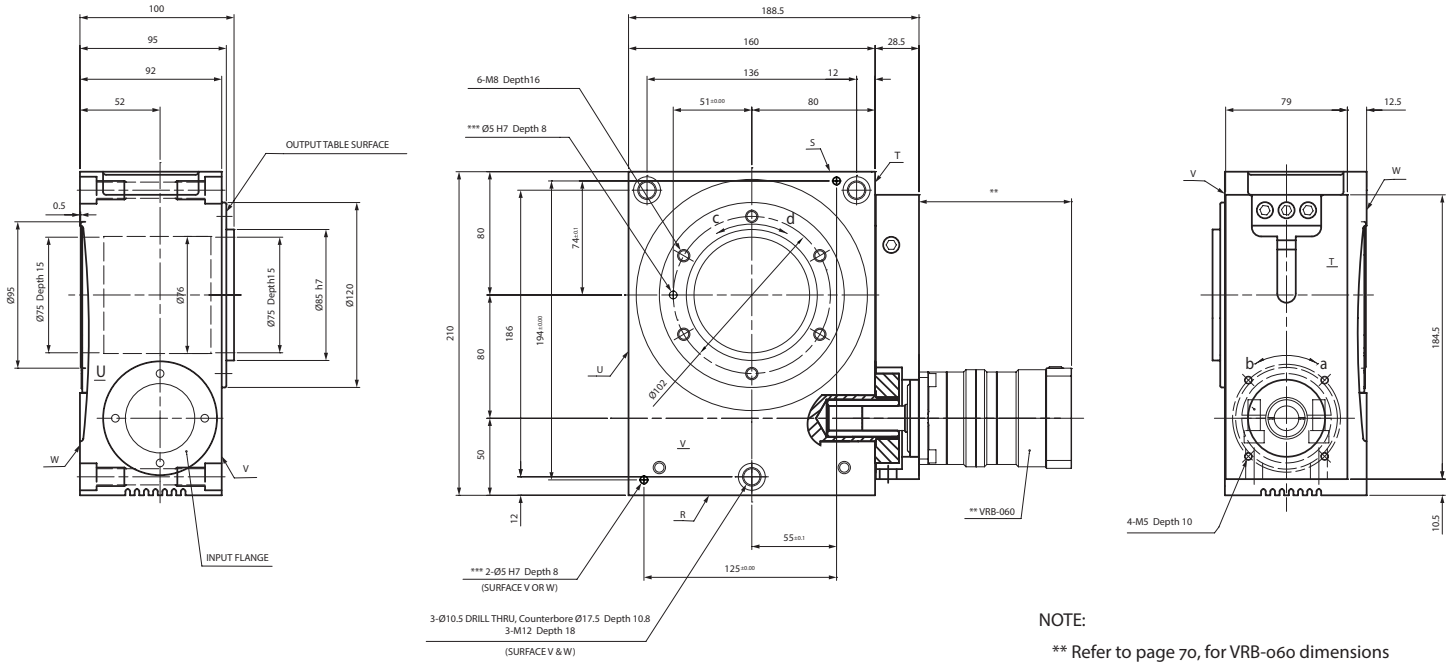

NOTE:
** Refer to page 70, for VRB-060 dimensions
*** Optional

ROTATION:
a=d
a=c (upon special request)

STR

STR 080E 1-Stage and 2-Stage Specifications with EVB 060

Frame Size			**080E**							
Stage			**1-Stage**	**2-Stage**						
Ratio	Units	Notes	20	60	80	100	120	140	160	180
Nominal Torque	[Nm]	*1	113	113	113	113	113	113	113	113
Acceleration Torque	[Nm]	--	202	202	202	202	202	202	202	202
No Load Torque	[Nm]	*1	1.3	0.4	0.4	0.4	0.4	0.4	0.4	0.4
Nominal Input Speed	[rpm]	*2	700	2100	2800	3000	3000	3000	3000	3000
Maximum Input Speed	[rpm]	*2	2500	6000	6000	6000	6000	6000	6000	6000
Reflected Inertia (Single)	[kg-m^{2}x10^{-4}]	*3	3.066	--	--	--	--	--	--	--
Reflected Inertia (≤Ø 8)	[kg-m^{2}x10^{-4}]	*3	--	0.319	0.274	0.256	0.247	0.242	0.238	0.236
Reflected Inertia (≤Ø 14)	[kg-m^{2}x10^{-4}]	*3	--	0.394	0.349	0.331	0.322	0.317	0.313	0.311
Reflected Inertia (≤Ø 19)	[kg-m^{2}x10^{-4}]	*3	--	0.583	0.538	0.521	0.512	0.506	0.503	0.501
Backlash	[arc-min]	--	0	0	0	0	0	0	0	0
Angular Transmission Accuracy	[arc-min]	--	≤ 0.7	≤ 0.7						
Angular Repeatability Accuracy	[arc-min]	--	± 0.08	± 0.08						
Surface Runout	[µm (max)]	--	10	10	10	10	10	10	10	10
Weight	[kg]	--	11.6	13.4	13.4	13.4	13.4	13.4	13.4	13.4
Maximum Axial Load	[N]	--	3302	3302	3302	3302	3302	3302	3302	3302
Maximum Radial Load	[N]	--	2819	2819	2819	2819	2819	2819	2819	2819
Maximum Tilting Moment Load	[Nm]	--	210	210	210	210	210	210	210	210
Efficiency	[%]	--	80	72	72	72	72	72	72	72
Protection Class	--	*4	IP54 (IP65)							

*1) At nominal input speed
*2) Speeds are at the actuator input. Limits when used with additional gearbox are higher
*3) At input shaft
*4) IP65 (wash-down) is available as an option. Contact Nidec Drive Technology for more details and our food grade options

STR 080E 2-Stage and 3-Stage Specifications with EVB 060

Frame Size			**080E**							
Stage			**2-Stage**	**3-Stage**						
Ratio	Units	Notes	200	300	320	400	500	560	600	700
Nominal Torque	[Nm]	*1	113	113	113	113	113	113	113	113
Acceleration Torque	[Nm]	--	202	202	202	202	202	202	202	202
No Load Torque	[Nm]	*1	0.4	0.3	0.3	0.3	0.3	0.3	0.3	0.3
Nominal Input Speed	[rpm]	*2	3000	3000	3000	3000	3000	3000	3000	3000
Maximum Input Speed	[rpm]	*2	6000	6000	6000	6000	6000	6000	6000	6000
Reflected Inertia (Single)	[kg-m^{2}x10^{-4}]	*3	--	--	--	--	--	--	--	--
Reflected Inertia (≤Ø 8)	[kg-m^{2}x10^{-4}]	*3	0.235	0.081	0.087	0.079	0.079	0.085	0.070	0.078
Reflected Inertia (≤Ø 14)	[kg-m^{2}x10^{-4}]	*3	0.310	0.126	0.132	0.124	0.123	0.130	0.114	0.123
Reflected Inertia (≤Ø 19)	[kg-m^{2}x10^{-4}]	*3	0.499	--	--	--	--	--	--	--
Backlash	[arc-min]	--	0	0	0	0	0	0	0	0
Angular Transmission Accuracy	[arc-min]	--	≤ 0.7	≤ 0.7						
Angular Repeatability Accuracy	[arc-min]	--	± 0.08	± 0.08						
Surface Runout	[µm (max)]	--	10	10	10	10	10	10	10	10
Weight	[kg]	--	13.4	13.2	13.2	13.2	13.2	13.2	13.2	13.2
Maximum Axial Load	[N]	--	3302	3302	3302	3302	3302	3302	3302	3302
Maximum Radial Load	[N]	--	2819	2819	2819	2819	2819	2819	2819	2819
Maximum Tilting Moment Load	[Nm]	--	210	210	210	210	210	210	210	210
Efficiency	[%]	--	72	68	68	68	68	68	68	68
Protection Class	--	*4	IP54 (IP65)							

*1) At nominal input speed
*2) Speeds are at the actuator input. Limits when used with additional gearbox are higher
*3) At input shaft
*4) IP65 (wash-down) is available as an option. Contact Nidec Drive Technology for more details and our food grade options

STR 080E 3-Stage Specifications with EVB 060

Frame Size	080E									
Stage	**3-Stage**									
Ratio	Units	Notes	800	900	1000	1200	1400	1600	1800	2000
Nominal Torque	[Nm]	*1	113	113	113	113	113	113	113	113
Acceleration Torque	[Nm]	--	202	202	202	202	202	202	202	202
No Load Torque	[Nm]	*1	0.3	0.3	0.3	0.3	0.3	0.3	0.3	0.3
Nominal Input Speed	[rpm]	*2	3000	3000	3000	3000	3000	3000	3000	3000
Maximum Input Speed	[rpm]	*2	6000	6000	6000	6000	6000	6000	6000	6000
Reflected Inertia (Single)	[kg-m^{2}x10^{-4}]	*3	--	--	--	--	--	--	--	--
Reflected Inertia (≤Ø 8)	[kg-m^{2}x10^{-4}]	*3	0.069	0.078	0.069	0.069	0.069	0.069	0.069	0.069
Reflected Inertia (≤Ø 14)	[kg-m^{2}x10^{-4}]	*3	0.114	0.123	0.114	0.114	0.113	0.113	0.113	0.113
Reflected Inertia (≤Ø 19)	[kg-m^{2}x10^{-4}]	*3	--	--	--	--	--	--	--	--
Backlash	[arc-min]	--	0	0	0	0	0	0	0	0
Angular Transmission Accuracy	[arc-min]	--	≤ 0.7							
Angular Repeatability Accuracy	[arc-min]	--	± 0.08							
Surface Runout	[µm (max)]	--	10	10	10	10	10	10	10	10
Weight	[kg]	--	13.2	13.2	13.2	13.2	13.2	13.2	13.2	13.2
Maximum Axial Load	[N]	--	3302	3302	3302	3302	3302	3302	3302	3302
Maximum Radial Load	[N]	--	2819	2819	2819	2819	2819	2819	2819	2819
Maximum Tilting Moment Load	[Nm]	--	210	210	210	210	210	210	210	210
Efficiency	[%]	--	68	68	68	68	68	68	68	68
Protection Class	--	*4	IP54 (IP65)							

*1) At nominal input speed
*2) Speeds are at the actuator input. Limits when used with additional gearbox are higher
*3) At input shaft
*4) IP65 (wash-down) is available as an option. Contact Nidec Drive Technology for more details and our food grade options

STR 080E Dimensions with EVB 060

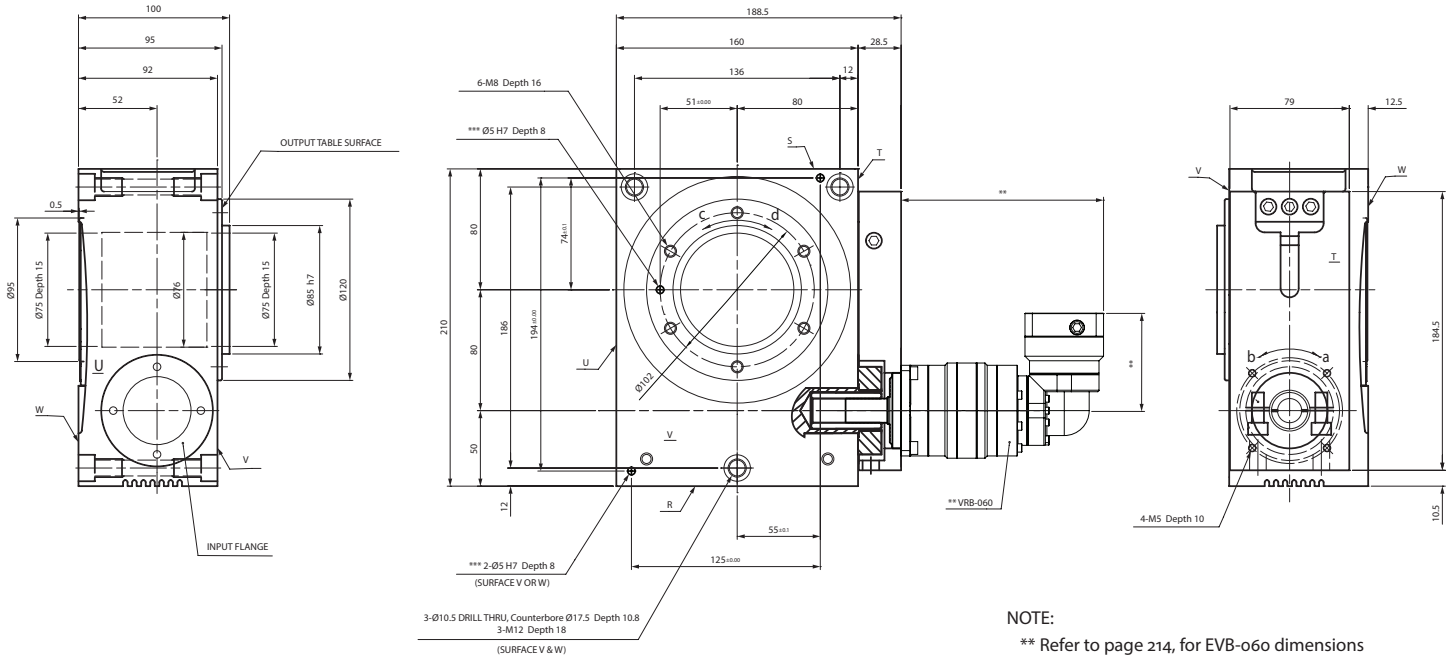

NOTE:
** Refer to page 214, for EVB-060 dimensions
*** Optional

ROTATION:
a=d
a=c (upon special request)

STR

STR 100V 1-Stage and 2-Stage Specifications with VRB 090

Frame Size	**100V**									
Stage			**1-Stage**	**2-Stage**						
Ratio	Units	Notes	20	60	80	100	120	140	160	180
Nominal Torque	[Nm]	*1	330	330	330	330	330	330	330	330
Acceleration Torque	[Nm]	--	565	565	565	565	565	565	565	565
No Load Torque	[Nm]	*1	2.6	0.3	0.3	0.3	0.3	0.3	0.3	0.3
Nominal Input Speed	[rpm]	*2	600	1800	2400	3000	3000	3000	3000	3000
Maximum Input Speed	[rpm]	*2	2000	6000	6000	6000	6000	6000	6000	6000
Reflected Inertia (Single)	[kg-m^{2}x10^{-4}]	*3	8.687	--	--	--	--	--	--	--
Reflected Inertia (≤Ø 8)	[kg-m^{2}x10^{-4}]	*3	--	--	--	--	--	--	--	--
Reflected Inertia (≤Ø 14)	[kg-m^{2}x10^{-4}]	*3	--	0.742	0.512	0.422	0.382	0.342	0.332	0.312
Reflected Inertia (≤Ø 19)	[kg-m^{2}x10^{-4}]	*3	--	1.222	0.972	0.882	0.842	0.812	0.792	0.782
Reflected Inertia (≤Ø 28)	[kg-m^{2}x10^{-4}]	*3	--	3.222	3.022	2.922	2.822	2.822	2.822	2.822
Backlash	[arc-min]	--	0	0	0	0	0	0	0	0
Angular Transmission Accuracy	[arc-min]	--	≤ 0.7	≤ 0.7						
Angular Repeatability Accuracy	[arc-min]	--	± 0.08	± 0.08						
Surface Runout	[µm (max)]	--	10	10	10	10	10	10	10	10
Weight	[kg]	--	21.5	25.2	25.2	25.2	25.2	25.2	25.2	25.2
Maximum Axial Load	[N]	--	3724	3724	3724	3724	3724	3724	3724	3724
Maximum Radial Load	[N]	--	3109	3109	3109	3109	3109	3109	3109	3109
Maximum Tilting Moment Load	[Nm]	--	284	284	284	284	284	284	284	284
Efficiency	[%]	--	82	78	78	78	78	78	78	78
Protection Class	IP54 (IP65)									

*1) At nominal input speed
*2) Speeds are at the actuator input. Limits when used with additional gearbox are higher
*3) At input shaft
*4) IP65 (wash-down) is available as an option. Contact Nidec Drive Technology for more details and our food grade options

STR 100V 2-Stage and 3-Stage Specifications with VRB 090

Frame Size	**100V**									
Stage			**2-Stage**	**3-Stage**						
Ratio	Units	Notes	200	300	320	400	500	560	600	700
Nominal Torque	[Nm]	*1	330	330	330	330	330	330	330	330
Acceleration Torque	[Nm]	--	565	565	565	565	565	565	565	565
No Load Torque	[Nm]	*1	0.3	0.2	0.2	0.2	0.2	0.2	0.2	0.2
Nominal Input Speed	[rpm]	*2	3000	3000	3000	3000	3000	3000	3000	3000
Maximum Input Speed	[rpm]	*2	6000	6000	6000	6000	6000	6000	6000	6000
Reflected Inertia (Single)	[kg-m^{2}x10^{-4}]	*3	--	--	--	--	--	--	--	--
Reflected Inertia (≤Ø 8)	[kg-m^{2}x10^{-4}]	*3	--	0.152	0.172	0.152	0.142	0.162	0.122	0.142
Reflected Inertia (≤Ø 14)	[kg-m^{2}x10^{-4}]	*3	0.312	0.302	0.322	0.302	0.302	0.312	0.272	0.292
Reflected Inertia (≤Ø 19)	[kg-m^{2}x10^{-4}]	*3	0.772	0.742	0.762	0.742	0.732	0.752	0.722	0.732
Reflected Inertia (≤Ø 28)	[kg-m^{2}x10^{-4}]	*3	2.822	2.722	2.822	2.722	2.722	2.722	2.622	2.722
Backlash	[arc-min]	--	0	0	0	0	0	0	0	0
Angular Transmission Accuracy	[arc-min]	--	≤ 0.7	≤ 0.7						
Angular Repeatability Accuracy	[arc-min]	--	± 0.08	± 0.08						
Surface Runout	[µm (max)]	--	10	10	10	10	10	10	10	10
Weight	[kg]	--	25.2	25.7	25.7	25.7	25.7	25.7	25.7	25.7
Maximum Axial Load	[N]	--	3724	3724	3724	3724	3724	3724	3724	3724
Maximum Radial Load	[N]	--	3109	3109	3109	3109	3109	3109	3109	3109
Maximum Tilting Moment Load	[Nm]	--	284	284	284	284	284	284	284	284
Efficiency	[%]	--	78	74	74	74	74	74	74	74
Protection Class	IP54 (IP65)									

*1) At nominal input speed
*2) Speeds are at the actuator input. Limits when used with additional gearbox are higher
*3) At input shaft
*4) IP65 (wash-down) is available as an option. Contact Nidec Drive Technology for more details and our food grade options

STR 100V 1-Stage and 3-Stage Specifications with VRB 090

Frame Size	100V									
Stage			3-Stage							
Ratio	Units	Notes	800	900	1000	1200	1400	1600	1800	2000
Nominal Torque	[Nm]	*1	330	330	330	330	330	330	330	330
Acceleration Torque	[Nm]	--	565	565	565	565	565	565	565	565
No Load Torque	[Nm]	*1	0.2	0.2	0.2	0.2	0.2	0.2	0.2	0.2
Nominal Input Speed	[rpm]	*2	3000	3000	3000	3000	3000	3000	3000	3000
Maximum Input Speed	[rpm]	*2	6000	6000	6000	6000	6000	6000	6000	6000
Reflected Inertia (Single)	[kg-m^{2}x10^{-4}]	*3	--	--	--	--	--	--	--	--
Reflected Inertia (≤Ø 8)	[kg-m^{2}x10^{-4}]	*3	0.121	0.142	0.120	0.120	0.119	0.119	0.119	0.119
Reflected Inertia (≤Ø 14)	[kg-m^{2}x10^{-4}]	*3	0.272	0.292	0.272	0.272	0.272	0.272	0.272	0.272
Reflected Inertia (≤Ø 19)	[kg-m^{2}x10^{-4}]	*3	0.722	0.732	0.712	0.712	0.712	0.712	0.712	0.712
Reflected Inertia (≤Ø 28)	[kg-m^{2}x10^{-4}]	*3	2.622	2.722	2.622	2.622	2.622	2.622	2.622	2.622
Backlash	[arc-min]	--	0	0	0	0	0	0	0	0
Angular Transmission Accuracy	[arc-min]	--	≤ 0.7							
Angular Repeatability Accuracy	[arc-min]	--	± 0.08							
Surface Runout	[µm (max)]	--	10	10	10	10	10	10	10	10
Weight	[kg]	--	25.7	25.7	25.7	25.7	25.7	25.7	25.7	25.7
Maximum Axial Load	[N]	--	3724	3724	3724	3724	3724	3724	3724	3724
Maximum Radial Load	[N]	--	3109	3109	3109	3109	3109	3109	3109	3109
Maximum Tilting Moment Load	[Nm]	--	284	284	284	284	284	284	284	284
Efficiency	[%]	--	74	74	74	74	74	74	74	74
Protection Class	IP54 (IP65)									

*1) At nominal input speed
*2) Speeds are at the actuator input. Limits when used with additional gearbox are higher
*3) At input shaft
*4) IP65 (wash-down) is available as an option. Contact Nidec Drive Technology for more details and our food grade options

STR 100 Dimensions with VRB 090

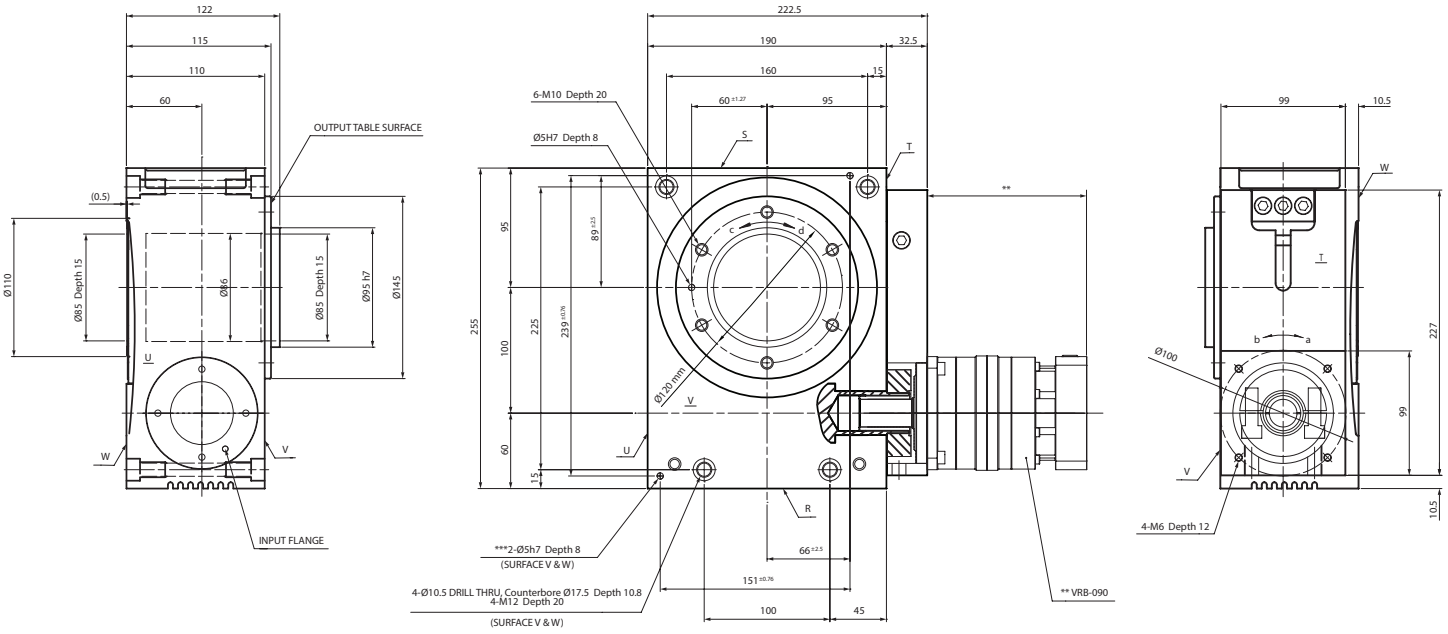

NOTE:

** Refer to page 74, for VRB-090 dimensions
*** Optional

ROTATION:

a=d
a=c (upon special request)

STR

STR 100E 1-Stage and 2-Stage Specifications with EVB 090

Frame Size			**100E**							
Stage			**1-Stage**	**2-Stage**						
Ratio	Units	Notes	20	60	80	100	120	140	160	180
Nominal Torque	[Nm]	*1	330	330	330	330	330	330	330	330
Acceleration Torque	[Nm]	--	565	565	565	565	565	565	565	565
No Load Torque	[Nm]	*1	2.6	1.3	1.3	1.3	1.3	1.3	1.3	1.3
Nominal Input Speed	[rpm]	*2	600	1800	2400	3000	3000	3000	3000	3000
Maximum Input Speed	[rpm]	*2	2000	6000	6000	6000	6000	6000	6000	6000
Reflected Inertia	[kg-m^{2}x10^{-4}]	*3	8.687	--	--	--	--	--	--	--
Reflected Inertia (≤Ø 8)	[kg-m^{2}x10^{-4}]	*3	--	--	--	--	--	--	--	--
Reflected Inertia (≤Ø 14)	[kg-m^{2}x10^{-4}]	*3	--	2.132	1.912	1.822	1.782	1.752	1.732	1.722
Reflected Inertia (≤Ø 19)	[kg-m^{2}2x10^{-4}]	*3	--	2.462	2.242	2.152	2.112	2.082	2.062	2.052
Reflected Inertia (≤Ø 28)	[kg-m^{2}x10^{-4}]	*3	--	4.592	4.372	4.282	4.232	4.202	4.192	4.182
Backlash	[arc-min]	--	0	0	0	0	0	0	0	0
Angular Transmission Accuracy	[arc-min]	--	≤ 0.7	≤ 0.7						
Angular Repeatability Accuracy	[arc-min]	--	± 0.08	± 0.08						
Surface Runout	[µm (max)]	--	10	10	10	10	10	10	10	10
Weight	[kg]	--	21.5	26.6	26.6	26.6	26.6	26.6	26.6	26.6
Maximum Axial Load	[N]	--	3724	3724	3724	3724	3724	3724	3724	3724
Maximum Radial Load	[N]	--	3109	3109	3109	3109	3109	3109	3109	3109
Maximum Tilting Moment Load	[Nm]	--	284	284	284	284	284	284	284	284
Efficiency	[%]	--	82	74	74	74	74	74	74	74
Protection Class	--	*4	IP54 (IP65)							

*1) At nominal input speed
*2) Speeds are at the actuator input. Limits when used with additional gearbox are higher
*3) At input shaft
*4) IP65 (wash-down) is available as an option. Contact Nidec Drive Technology for more details and our food grade options

STR 100E 2-Stage and 3-Stage Specifications with EVB 090

Frame Size			**100E**							
Stage			**2-Stage**	**3-Stage**						
Ratio	Units	Notes	200	300	320	400	500	560	600	700
Nominal Torque	[Nm]	*1	330	330	330	330	330	330	330	330
Acceleration Torque	[Nm]	--	565	565	565	565	565	565	565	565
No Load Torque	[Nm]	*1	1.3	0.7	0.7	0.7	0.7	0.7	0.7	0.7
Nominal Input Speed	[rpm]	*2	3000	3000	3000	3000	3000	3000	3000	3000
Maximum Input Speed	[rpm]	*2	6000	6000	6000	6000	6000	6000	6000	6000
Reflected Inertia	[kg-m^{2}x10^{-4}]	*3	--	--	--	--	--	--	--	--
Reflected Inertia (≤Ø 8)	[kg-m^{2}x10^{-4}]	*3	--	0.362	0.402	0.352	0.342	0.392	0.272	0.342
Reflected Inertia (≤Ø 14)	[kg-m^{2}x10^{-4}]	*3	1.712	0.432	0.482	0.422	0.422	0.472	0.352	0.422
Reflected Inertia (≤Ø 19)	[kg-m^{2}2x10^{-4}]	*3	2.042	0.622	0.672	0.612	0.612	0.662	0.532	0.612
Reflected Inertia (≤Ø 28)	[kg-m^{2}x10^{-4}]	*3	4.172	--	--	--	--	--	--	--
Backlash	[arc-min]	--	0	0	0	0	0	0	0	0
Angular Transmission Accuracy	[arc-min]	--	≤ 0.7	≤ 0.7						
Angular Repeatability Accuracy	[arc-min]	--	± 0.08	± 0.08						
Surface Runout	[µm (max)]	--	10	10	10	10	10	10	10	10
Weight	[kg]	--	26.6	25.9	25.9	25.9	25.9	25.9	25.9	25.9
Maximum Axial Load	[N]	--	3724	3724	3724	3724	3724	3724	3724	3724
Maximum Radial Load	[N]	--	3109	3109	3109	3109	3109	3109	3109	3109
Maximum Tilting Moment Load	[Nm]	--	284	284	284	284	284	284	284	284
Efficiency	[%]	--	74	70	70	70	70	70	70	70
Protection Class	--	*4	IP54 (IP65)							

*1) At nominal input speed
*2) Speeds are at the actuator input. Limits when used with additional gearbox are higher
*3) At input shaft
*4) IP65 (wash-down) is available as an option. Contact Nidec Drive Technology for more details and our food grade options

STR 100E 3-Stage Specifications with EVB 090

Frame Size	100E									
Stage	**3-Stage**									
Ratio	Units	Notes	800	900	1000	1200	1400	1600	1800	2000
Nominal Torque	[Nm]	*1	330	330	330	330	330	330	330	330
Acceleration Torque	[Nm]	--	565	565	565	565	565	565	565	565
No Load Torque	[Nm]	*1	0.7	0.7	0.7	0.7	0.7	0.7	0.7	0.7
Nominal Input Speed	[rpm]	*2	3000	3000	3000	3000	3000	3000	3000	3000
Maximum Input Speed	[rpm]	*2	6000	6000	6000	6000	6000	6000	6000	6000
Reflected Inertia	[kg-m^{2}x10^{-4}]	*3	--	--	--	--	--	--	--	--
Reflected Inertia (≤Ø 8)	[kg-m^{2}x10^{-4}]	*3	0.272	0.342	0.272	0.272	0.272	0.272	0.272	0.272
Reflected Inertia (≤Ø 14)	[kg-m^{2}x10^{-4}]	*3	0.342	0.412	0.342	0.342	0.342	0.342	0.342	0.342
Reflected Inertia (≤Ø 19)	[kg-m^{2}2x10^{-4}]	*3	0.532	0.602	0.532	0.532	0.532	0.532	0.532	0.532
Reflected Inertia (≤Ø 28)	[kg-m^{2}x10^{-4}]	*3	--	--	--	--	--	--	--	--
Backlash	[arc-min]	--	0	0	0	0	0	0	0	0
Angular Transmission Accuracy	[arc-min]	--	≤ 0.7							
Angular Repeatability Accuracy	[arc-min]	--	± 0.08							
Surface Runout	[µm (max)]	--	10	10	10	10	10	10	10	10
Weight	[kg]	--	25.9	25.9	25.9	25.9	25.9	25.9	25.9	25.9
Maximum Axial Load	[N]	--	3724	3724	3724	3724	3724	3724	3724	3724
Maximum Radial Load	[N]	--	3109	3109	3109	3109	3109	3109	3109	3109
Maximum Tilting Moment Load	[Nm]	--	284	284	284	284	284	284	284	284
Efficiency	[%]	--	70	70	70	70	70	70	70	70
Protection Class	--	*4	IP54 (IP65)							

*1) At nominal input speed
*2) Speeds are at the actuator input. Limits when used with additional gearbox are higher
*3) At input shaft
*4) IP65 (wash-down) is available as an option. Contact Nidec Drive Technology for more details and our food grade options

STR 100 Dimensions with EVB 090

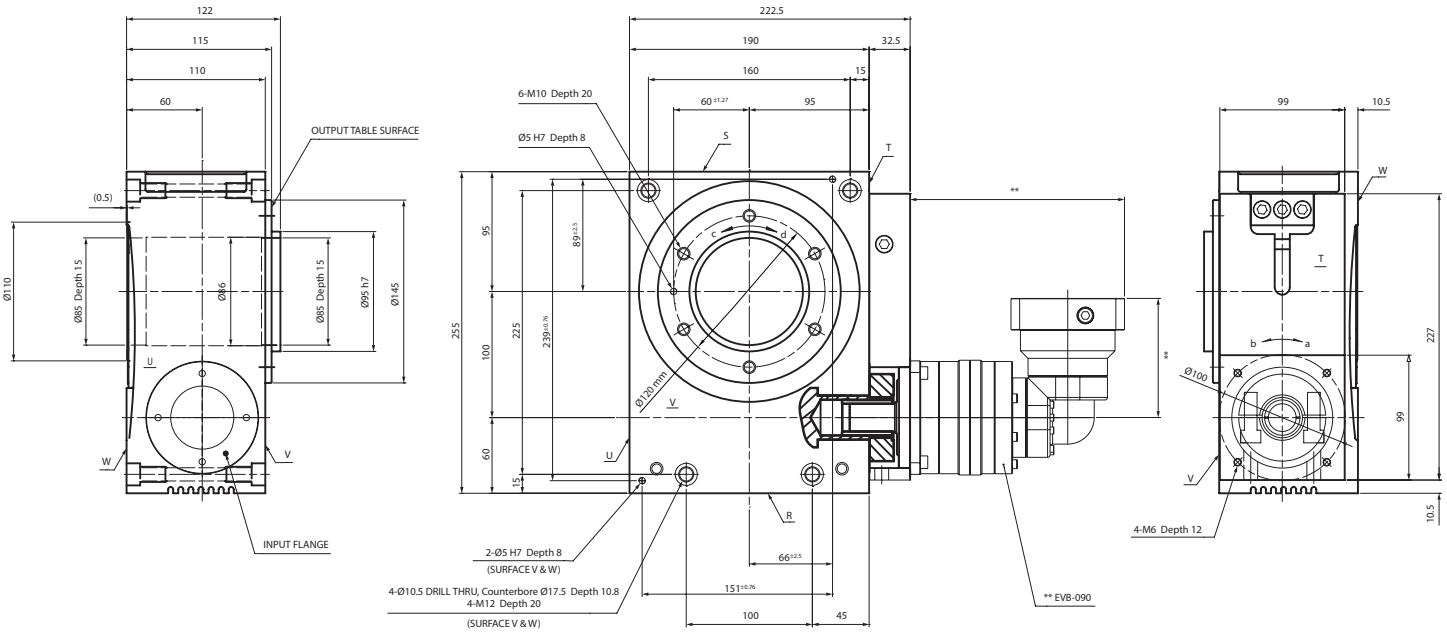

NOTE:
** Refer to page 218, for EVB-090 dimensions
*** Optional

ROTATION:
a=d
a=c (upon special request)

STR

STR 125V 1-Stage and 2-Stage Specifications with VRB 090

Frame Size			**125V**							
Stage			**1-Stage**	**2-Stage**						
Ratio	Units	Notes	20	60	80	100	120	140	160	180
Nominal Torque	[Nm]	*1	548	548	548	548	548	548	548	548
Acceleration Torque	[Nm]	--	939	939	939	939	939	939	939	939
No Load Torque	[Nm]	*1	3.8	0.4	0.4	0.4	0.4	0.4	0.4	0.4
Nominal Input Speed	[rpm]	*2	600	1800	2400	3000	3000	3000	3000	3000
Maximum Input Speed	[rpm]	*2	1600	4800	6000	6000	6000	6000	6000	6000
Reflected Inertia (Single)	[kg-m^{2}x10^{-4}]	*3	14.85	--	--	--	--	--	--	--
Reflected Inertia (≤Ø 8)	[kg-m^{2}x10^{-4}]	*3	--	--	--	--	--	--	--	--
Reflected Inertia (≤Ø 14)	[kg-m^{2}x10^{-4}]	*3	--	0.757	0.527	0.437	0.397	0.357	0.347	0.327
Reflected Inertia (≤Ø 19)	[kg-m^{2}x10^{-4}]	*3	--	1.237	0.987	0.897	0.857	0.827	0.807	0.797
Reflected Inertia (≤Ø 28)	[kg-m^{2}x10^{-4}]	*3	--	3.237	3.037	2.937	2.837	2.837	2.837	2.837
Backlash	[arc-min]	--	0	0	0	0	0	0	0	0
Angular Transmission Accuracy	[arc-min]	--	≤ 0.7	≤ 0.7						
Angular Repeatability Accuracy	[arc-min]	--	± 0.08	± 0.08						
Surface Runout	[µm (max)]	--	10	10	10	10	10	10	10	10
Weight	[kg]	--	36.3	40.0	40.0	40.0	40.0	40.0	40.0	40.0
Maximum Axial Load	[N]	--	8178	8178	8178	8178	8178	8178	8178	8178
Maximum Radial Load	[N]	--	7452	7452	7452	7452	7452	7452	7452	7452
Maximum Tilting Moment Load	[Nm]	--	764	764	764	764	764	764	764	764
Efficiency	[%]	--	80	76	76	76	76	76	76	76
Protection Class	--	*4	IP54 (IP65)							

*1) At nominal input speed
*2) Speeds are at the actuator input. Limits when used with additional gearbox are higher
*3) At input shaft
*4) IP65 (wash-down) is available as an option. Contact Nidec Drive Technology for more details and our food grade options

STR 125V 2-Stage and 3-Stage Specifications with VRB 090

Frame Size			**125V**							
Stage			**2-Stage**	**3-Stage**						
Ratio	Units	Notes	200	300	320	400	500	560	600	700
Nominal Torque	[Nm]	*1	548	548	548	548	548	548	548	548
Acceleration Torque	[Nm]	--	939	939	939	939	939	939	939	939
No Load Torque	[Nm]	*1	0.4	0.2	0.2	0.2	0.2	0.2	0.2	0.2
Nominal Input Speed	[rpm]	*2	3000	3000	3000	3000	3000	3000	3000	3000
Maximum Input Speed	[rpm]	*2	6000	6000	6000	6000	6000	6000	6000	6000
Reflected Inertia (Single)	[kg-m^{2}x10^{-4}]	*3	--	--	--	--	--	--	--	--
Reflected Inertia (≤Ø 8)	[kg-m^{2}x10^{-4}]	*3	--	0.167	0.187	0.167	0.157	0.177	0.137	0.157
Reflected Inertia (≤Ø 14)	[kg-m^{2}x10^{-4}]	*3	0.327	0.317	0.337	0.317	0.317	0.327	0.287	0.307
Reflected Inertia (≤Ø 19)	[kg-m^{2}x10^{-4}]	*3	0.787	0.757	0.777	0.757	0.747	0.767	0.737	0.747
Reflected Inertia (≤Ø 28)	[kg-m^{2}x10^{-4}]	*3	2.837	2.737	2.837	2.737	2.737	2.737	2.637	2.737
Backlash	[arc-min]	--	0	0	0	0	0	0	0	0
Angular Transmission Accuracy	[arc-min]	--	≤ 0.7	≤ 0.7						
Angular Repeatability Accuracy	[arc-min]	--	± 0.08	± 0.08						
Surface Runout	[µm (max)]	--	10	10	10	10	10	10	10	10
Weight	[kg]	--	40.0	40.5	40.5	40.5	40.5	40.5	40.5	40.5
Maximum Axial Load	[N]	--	8178	8178	8178	8178	8178	8178	8178	8178
Maximum Radial Load	[N]	--	7452	7452	7452	7452	7452	7452	7452	7452
Maximum Tilting Moment Load	[Nm]	--	764	764	764	764	764	764	764	764
Efficiency	[%]	--	76	72	72	72	72	72	72	72
Protection Class	--	*4	IP54 (IP65)							

*1) At nominal input speed
*2) Speeds are at the actuator input. Limits when used with additional gearbox are higher
*3) At input shaft
*4) IP65 (wash-down) is available as an option. Contact Nidec Drive Technology for more details and our food grade options

STR 125V 3-Stage Specifications with VRB 090

Frame Size	125V									
Stage	**3-Stage**									
Ratio	Units	Notes	800	900	1000	1200	1400	1600	1800	2000
Nominal Torque	[Nm]	*1	548	548	548	548	548	548	548	548
Acceleration Torque	[Nm]	--	939	939	939	939	939	939	939	939
No Load Torque	[Nm]	*1	0.2	0.2	0.2	0.2	0.2	0.2	0.2	0.2
Nominal Input Speed	[rpm]	*2	3000	3000	3000	3000	3000	3000	3000	3000
Maximum Input Speed	[rpm]	*2	6000	6000	6000	6000	6000	6000	6000	6000
Reflected Inertia (Single)	[kg-m^{2}x10^{-4}]	*3	--	--	--	--	--	--	--	--
Reflected Inertia (≤Ø 8)	[kg-m^{2}x10^{-4}]	*3	0.136	0.157	0.135	0.135	0.134	0.134	0.134	0.134
Reflected Inertia (≤Ø 14)	[kg-m^{2}x10^{-4}]	*3	0.287	0.307	0.287	0.287	0.287	0.287	0.287	0.287
Reflected Inertia (≤Ø 19)	[kg-m^{2}x10^{-4}]	*3	0.737	0.747	0.727	0.727	0.727	0.727	0.727	0.727
Reflected Inertia (≤Ø 28)	[kg-m^{2}x10^{-4}]	*3	2.637	2.737	2.637	2.637	2.637	2.637	2.637	2.637
Backlash	[arc-min]	--	0	0	0	0	0	0	0	0
Angular Transmission Accuracy	[arc-min]	--	≤ 0.7							
Angular Repeatability Accuracy	[arc-min]	--	± 0.08							
Surface Runout	[µm (max)]	--	10	10	10	10	10	10	10	10
Weight	[kg]	--	40.5	40.5	40.5	40.5	40.5	40.5	40.5	40.5
Maximum Axial Load	[N]	--	8178	8178	8178	8178	8178	8178	8178	8178
Maximum Radial Load	[N]	--	7452	7452	7452	7452	7452	7452	7452	7452
Maximum Tilting Moment Load	[Nm]	--	764	764	764	764	764	764	764	764
Efficiency	[%]	--	72	72	72	72	72	72	72	72
Protection Class	--	*4	IP54 (IP65)							

*1) At nominal input speed
*2) Speeds are at the actuator input. Limits when used with additional gearbox are higher
*3) At input shaft
*4) IP65 (wash-down) is available as an option. Contact Nidec Drive Technology for more details and our food grade options

STR 125 Dimensions with VRB 090

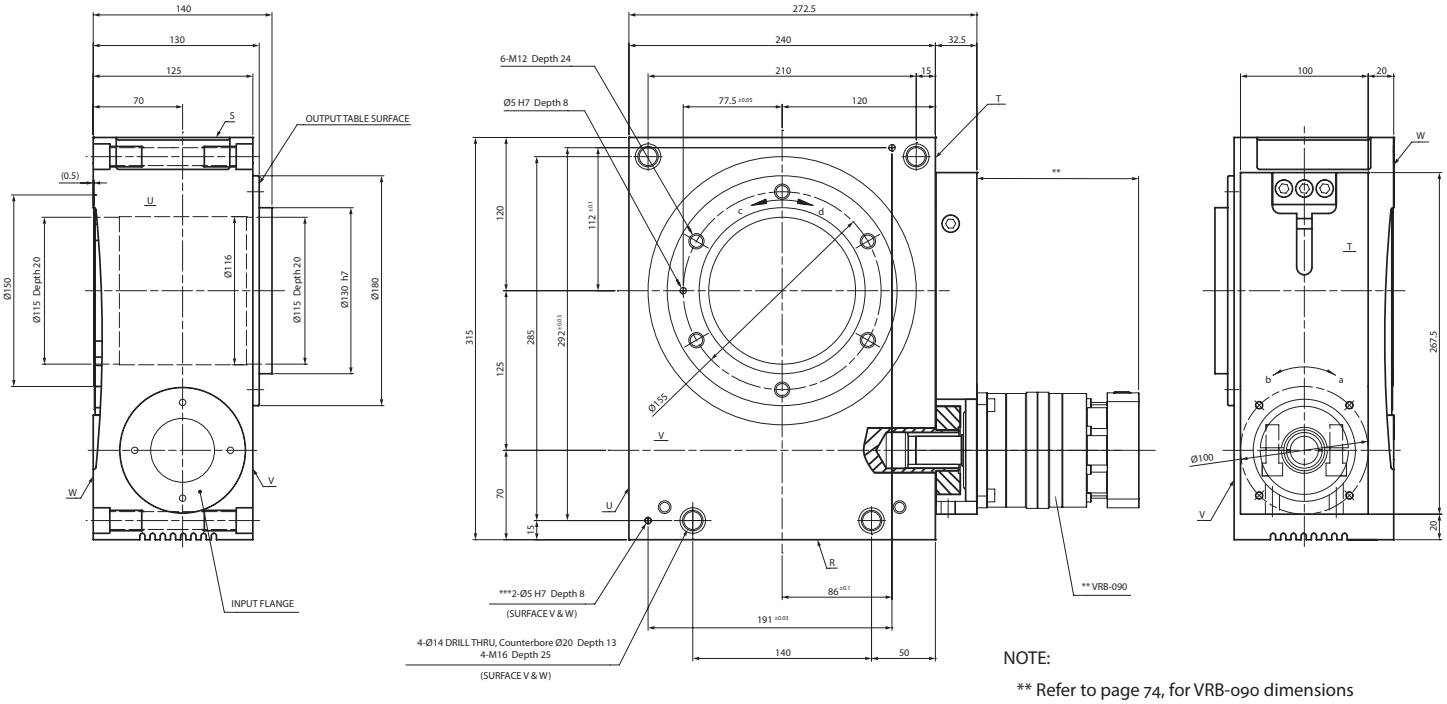

NOTE:

** Refer to page 74, for VRB-090 dimensions
*** Optional

ROTATION:

a=d
a=c (upon special request)

STR

STR 125E 1-Stage and 2-Stage Specifications with EVB 090

Frame Size			**125E**							
Stage			**1-Stage**	**2-Stage**						
Ratio	Units	Notes	20	60	80	100	120	140	160	180
Nominal Torque	[Nm]	*1	548	548	548	548	548	548	548	548
Acceleration Torque	[Nm]	--	939	939	939	939	939	939	939	939
No Load Torque	[Nm]	*1	3.8	1.3	1.3	1.3	1.3	1.3	1.3	1.3
Nominal Input Speed	[rpm]	*2	600	1800	2400	3000	3000	3000	3000	3000
Maximum Input Speed	[rpm]	*2	1600	4800	6000	6000	6000	6000	6000	6000
Reflected Inertia (Single)	[kg-m^{2}x10^{-4}]	*3	14.85	--	--	--	--	--	--	--
Reflected Inertia (≤Ø 8)	[kg-m^{2}x10^{-4}]	*3	--	--	--	--	--	--	--	--
Reflected Inertia (≤Ø 14)	[kg-m^{2}x10^{-4}]	*3	--	2.147	1.927	1.837	1.797	1.767	1.747	1.737
Reflected Inertia (≤Ø 19)	[kg-m^{2}x10^{-4}]	*3	--	2.477	2.257	2.167	2.127	2.097	2.077	2.067
Reflected Inertia (≤Ø 28)	[kg-m^{2}x10^{-4}]	*3	--	4.607	4.387	4.297	4.247	4.217	4.207	4.197
Backlash	[arc-min]	--	0	0	0	0	0	0	0	0
Angular Transmission Accuracy	[arc-min]	--	≤ 0.7	≤ 0.7						
Angular Repeatability Accuracy	[arc-min]	--	± 0.08	± 0.08						
Surface Runout	[µm (max)]	--	10	10	10	10	10	10	10	10
Weight	[kg]	--	36.3	41.4	41.4	41.4	41.4	41.4	41.4	41.4
Maximum Axial Load	[N]	--	8178	8178	8178	8178	8178	8178	8178	8178
Maximum Radial Load	[N]	--	7452	7452	7452	7452	7452	7452	7452	7452
Maximum Tilting Moment Load	[Nm]	--	764	764	764	764	764	764	764	764
Efficiency	[%]	--	80	72	72	72	72	72	72	72
Protection Class	--	*4	IP54 (IP65)							

*1) At nominal input speed
*2) Speeds are at the actuator input. Limits when used with additional gearbox are higher
*3) At input shaft
*4) IP65 (wash-down) is available as an option. Contact Nidec Drive Technology for more details and our food grade options

STR 125E 2-Stage and 3-Stage Specifications with EVB 090

Frame Size			**125E**							
Stage			**2-Stage**	**3-Stage**						
Ratio	Units	Notes	200	300	320	400	500	560	600	700
Nominal Torque	[Nm]	*1	548	548	548	548	548	548	548	548
Acceleration Torque	[Nm]	--	939	939	939	939	939	939	939	939
No Load Torque	[Nm]	*1	1.3	0.7	0.7	0.7	0.7	0.7	0.7	0.7
Nominal Input Speed	[rpm]	*2	3000	3000	3000	3000	3000	3000	3000	3000
Maximum Input Speed	[rpm]	*2	6000	6000	6000	6000	6000	6000	6000	6000
Reflected Inertia (Single)	[kg-m^{2}x10^{-4}]	*3	--	--	--	--	--	--	--	--
Reflected Inertia (≤Ø 8)	[kg-m^{2}x10^{-4}]	*3	--	0.377	0.417	0.367	0.357	0.407	0.287	0.357
Reflected Inertia (≤Ø 14)	[kg-m^{2}x10^{-4}]	*3	1.727	0.447	0.497	0.437	0.437	0.487	0.367	0.437
Reflected Inertia (≤Ø 19)	[kg-m^{2}x10^{-4}]	*3	2.057	0.637	0.687	0.627	0.627	0.677	0.547	0.627
Reflected Inertia (≤Ø 28)	[kg-m^{2}x10^{-4}]	*3	4.187	--	--	--	--	--	--	--
Backlash	[arc-min]	--	0	0	0	0	0	0	0	0
Angular Transmission Accuracy	[arc-min]	--	≤ 0.7	≤ 0.7						
Angular Repeatability Accuracy	[arc-min]	--	± 0.08	± 0.08						
Surface Runout	[µm (max)]	--	10	10	10	10	10	10	10	10
Weight	[kg]	--	41.4	40.7	40.7	40.7	40.7	40.7	40.7	40.7
Maximum Axial Load	[N]	--	8178	8178	8178	8178	8178	8178	8178	8178
Maximum Radial Load	[N]	--	7452	7452	7452	7452	7452	7452	7452	7452
Maximum Tilting Moment Load	[Nm]	--	764	764	764	764	764	764	764	764
Efficiency	[%]	--	72	68	68	68	68	68	68	68
Protection Class	--	*4	IP54 (IP65)							

*1) At nominal input speed
*2) Speeds are at the actuator input. Limits when used with additional gearbox are higher
*3) At input shaft
*4) IP65 (wash-down) is available as an option. Contact Nidec Drive Technology for more details and our food grade options

STR 125E 3-Stage Specifications with EVB 090

Frame Size	125E									
Stage	**3-Stage**									
Ratio	Units	Notes	800	900	1000	1200	1400	1600	1800	2000
Nominal Torque	[Nm]	*1	548	548	548	548	548	548	548	548
Acceleration Torque	[Nm]	--	939	939	939	939	939	939	939	939
No Load Torque	[Nm]	*1	0.7	0.7	0.7	0.7	0.7	0.7	0.7	0.7
Nominal Input Speed	[rpm]	*2	3000	3000	3000	3000	3000	3000	3000	3000
Maximum Input Speed	[rpm]	*2	6000	6000	6000	6000	6000	6000	6000	6000
Reflected Inertia (Single)	[kg-m^{2}x10^{-4}]	*3	--	--	--	--	--	--	--	--
Reflected Inertia (≤Ø 8)	[kg-m^{2}x10^{-4}]	*3	0.287	0.357	0.287	0.287	0.287	0.287	0.287	0.287
Reflected Inertia (≤Ø 14)	[kg-m^{2}x10^{-4}]	*3	0.357	0.427	0.357	0.357	0.357	0.357	0.357	0.357
Reflected Inertia (≤Ø 19)	[kg-m^{2}x10^{-4}]	*3	0.547	0.617	0.547	0.547	0.547	0.547	0.547	0.547
Reflected Inertia (≤Ø 28)	[kg-m^{2}x10^{-4}]	*3	--	--	--	--	--	--	--	--
Backlash	[arc-min]	--	0	0	0	0	0	0	0	0
Angular Transmission Accuracy	[arc-min]	--	≤ 0.7							
Angular Repeatability Accuracy	[arc-min]	--	± 0.08							
Surface Runout	[µm (max)]	--	10	10	10	10	10	10	10	10
Weight	[kg]	--	40.7	40.7	40.7	40.7	40.7	40.7	40.7	40.7
Maximum Axial Load	[N]	--	8178	8178	8178	8178	8178	8178	8178	8178
Maximum Radial Load	[N]	--	7452	7452	7452	7452	7452	7452	7452	7452
Maximum Tilting Moment Load	[Nm]	--	764	764	764	764	764	764	764	764
Efficiency	[%]	--	68	68	68	68	68	68	68	68
Protection Class	--	*4	IP54 (IP65)							

*1) At nominal input speed
*2) Speeds are at the actuator input. Limits when used with additional gearbox are higher
*3) At input shaft
*4) IP65 (wash-down) is available as an option. Contact Nidec Drive Technology for more details and our food grade options

STR 125 Dimensions with EVB 090

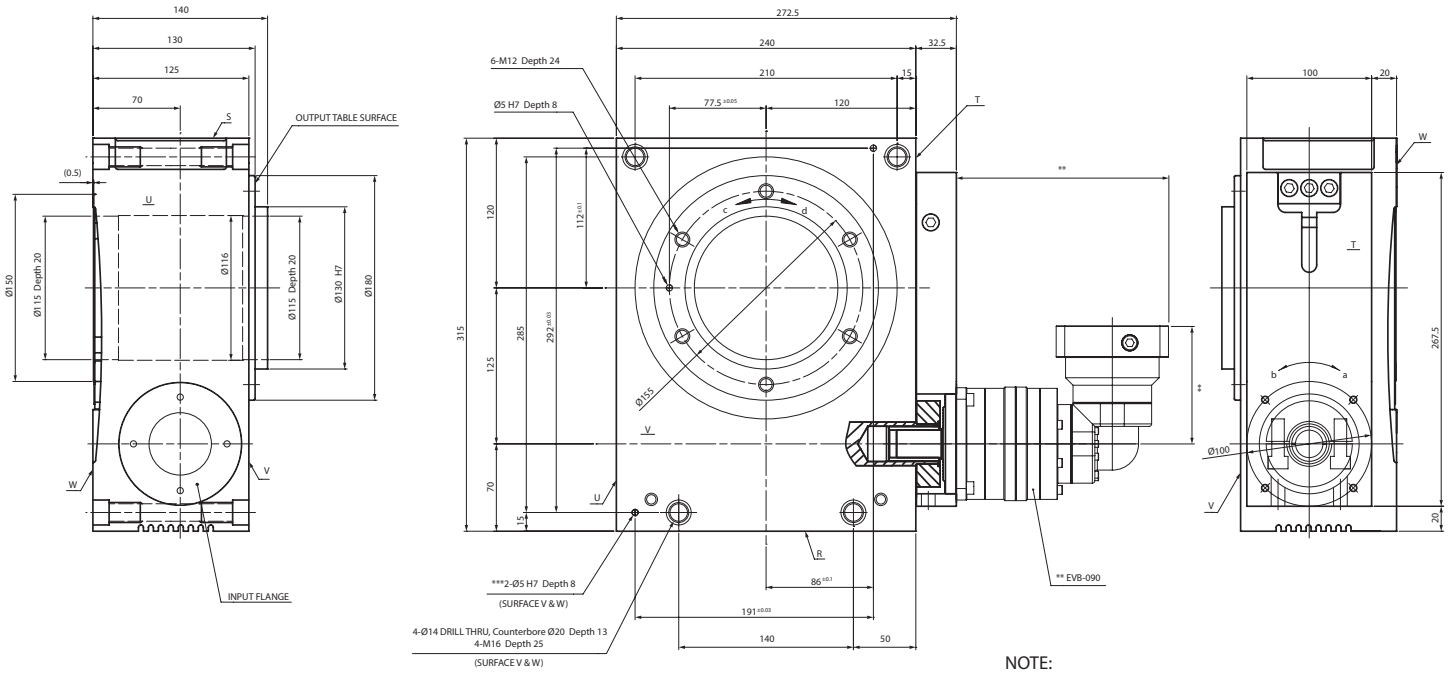

NOTE:
** Refer to page 218, for EVB-090 dimensions
*** Optional

ROTATION:
a=d
a=c (upon special request)

STR

STR 160V 1-Stage and 2-Stage Specifications with VRB 115

Frame Size			**160V**							
Stage			**1-Stage**	**2-Stage**						
Ratio	Units	Notes	20	60	80	100	120	140	160	180
Nominal Torque	[Nm]	*1	1165	1165	1165	1165	1165	1165	1165	1165
Acceleration Torque	[Nm]	--	1888	1888	1888	1888	1888	1888	1888	1888
No Load Torque	[Nm]	*1	6.6	1.1	1.1	1.1	1.1	1.1	1.1	1.1
Nominal Input Speed	[rpm]	*2	500	1500	2000	2500	3000	3000	3000	3000
Maximum Input Speed	[rpm]	*2	1000	3000	4000	5000	6000	6000	6000	6000
Reflected Inertia (Single)	[kg-m²x10⁻⁴]	*3	46.99	--	--	--	--	--	--	--
Reflected Inertia (≤Ø 14)	[kg-m²x10⁻⁴]	*3	--	--	--	--	--	--	--	--
Reflected Inertia (≤Ø 19)	[kg-m²x10⁻⁴]	*3	--	3.417	2.117	1.717	1.417	1.217	1.117	1.097
Reflected Inertia (≤Ø 28)	[kg-m²x10⁻⁴]	*3	--	5.417	4.217	3.717	3.417	3.317	3.217	3.117
Reflected Inertia (≤Ø 38)	[kg-m²x10⁻⁴]	*3	--	13.12	12.12	11.12	11.12	11.12	11.12	11.12
Backlash	[arc-min]	--	0	0	0	0	0	0	0	0
Angular Transmission Accuracy	[arc-min]	--	≤ 1.5	≤ 1.5						
Angular Repeatability Accuracy	[arc-min]	--	± 0.15	± 0.15						
Surface Runout	[µm (max)]	--	20	20	20	20	20	20	20	20
Weight	[kg]	--	126	134	134	134	134	134	134	134
Maximum Axial Load	[N]	--	17170	17170	17170	17170	17170	17170	17170	17170
Maximum Radial Load	[N]	--	7283	7283	7283	7283	7283	7283	7283	7283
Maximum Tilting Moment Load	[Nm]	--	1216.3	1216.3	1216.3	1216.3	1216.3	1216.3	1216.3	1216.3
Efficiency	[%]	--	80	76	76	76	76	76	76	76
Protection Class	--	*4	IP54 (IP65)							

*1) At nominal input speed
*2) Speeds are at the actuator input. Limits when used with additional gearbox are higher
*3) At input shaft
*4) IP65 (wash-down) is available as an option. Contact Nidec Drive Technology for more details and our food grade options

STR 160V 2-Stage and 3-Stage Specifications with VRB 115

Frame Size			**160V**							
Stage			**2-Stage**	**3-Stage**						
Ratio	Units	Notes	200	300	320	400	500	560	600	700
Nominal Torque	[Nm]	*1	1165	1165	1165	1165	1165	1165	1165	1165
Acceleration Torque	[Nm]	--	1888	1888	1888	1888	1888	1888	1888	1888
No Load Torque	[Nm]	*1	1.1	0.5	0.5	0.5	0.5	0.5	0.5	0.5
Nominal Input Speed	[rpm]	*2	3000	3000	3000	3000	3000	3000	3000	3000
Maximum Input Speed	[rpm]	*2	6000	6000	6000	6000	6000	6000	6000	6000
Reflected Inertia (Single)	[kg-m²x10⁻⁴]	*3	--	--	--	--	--	--	--	--
Reflected Inertia (≤Ø 14)	[kg-m²x10⁻⁴]	*3	--	0.547	0.597	0.517	0.497	0.557	0.407	0.487
Reflected Inertia (≤Ø 19)	[kg-m²x10⁻⁴]	*3	1.097	0.977	1.037	0.947	0.937	0.997	0.857	0.927
Reflected Inertia (≤Ø 28)	[kg-m²x10⁻⁴]	*3	3.117	2.917	3.017	2.917	2.917	2.917	2.817	2.817
Reflected Inertia (≤Ø 38)	[kg-m²x10⁻⁴]	*3	11.12	11.12	11.12	11.12	11.12	11.12	10.12	11.12
Backlash	[arc-min]	--	0	0	0	0	0	0	0	0
Angular Transmission Accuracy	[arc-min]	--	≤ 1.5	≤ 1.5						
Angular Repeatability Accuracy	[arc-min]	--	± 0.15	± 0.15						
Surface Runout	[µm (max)]	--	20	20	20	20	20	20	20	20
Weight	[kg]	--	134	135	135	135	135	135	135	135
Maximum Axial Load	[N]	--	17170	17170	17170	17170	17170	17170	17170	17170
Maximum Radial Load	[N]	--	7283	7283	7283	7283	7283	7283	7283	7283
Maximum Tilting Moment Load	[Nm]	--	1216.3	1216.3	1216.3	1216.3	1216.3	1216.3	1216.3	1216.3
Efficiency	[%]	--	76	72	72	72	72	72	72	72
Protection Class	--	*4	IP54 (IP65)							

*1) At nominal input speed
*2) Speeds are at the actuator input. Limits when used with additional gearbox are higher
*3) At input shaft
*4) IP65 (wash-down) is available as an option. Contact Nidec Drive Technology for more details and our food grade options

STR 160V 3-Stage Specifications with VRB 115

Frame Size	160V									
Stage	**3-Stage**									
Ratio	Units	Notes	800	900	1000	1200	1400	1600	1800	2000
Nominal Torque	[Nm]	*1	1165	1165	1165	1165	1165	1165	1165	1165
Acceleration Torque	[Nm]	--	1888	1888	1888	1888	1888	1888	1888	1888
No Load Torque	[Nm]	*1	0.5	0.5	0.5	0.5	0.5	0.5	0.5	0.5
Nominal Input Speed	[rpm]	*2	3000	3000	3000	3000	3000	3000	3000	3000
Maximum Input Speed	[rpm]	*2	6000	6000	6000	6000	6000	6000	6000	6000
Reflected Inertia (Single)	[kg-m^{2}x10^{-4}]	*3	--	--	--	--	--	--	--	--
Reflected Inertia (≤Ø 14)	[kg-m^{2}x10^{-4}]	*3	0.397	0.487	0.397	0.397	0.397	0.397	0.387	0.387
Reflected Inertia (≤Ø 19)	[kg-m^{2}x10^{-4}]	*3	0.847	0.917	0.847	0.847	0.847	0.847	0.847	0.847
Reflected Inertia (≤Ø 28)	[kg-m^{2}x10^{-4}]	*3	2.817	2.817	2.817	2.817	2.817	2.817	2.817	2.817
Reflected Inertia (≤Ø 38)	[kg-m^{2}x10^{-4}]	*3	10.12	11.12	10.12	10.12	10.12	10.12	10.12	10.12
Backlash	[arc-min]	--	0	0	0	0	0	0	0	0
Angular Transmission Accuracy	[arc-min]	--	≤ 1.5							
Angular Repeatability Accuracy	[arc-min]	--	± 0.15							
Surface Runout	[µm (max)]	--	20	20	20	20	20	20	20	20
Weight	[kg]	--	135	135	135	135	135	135	135	135
Maximum Axial Load	[N]	--	17170	17170	17170	17170	17170	17170	17170	17170
Maximum Radial Load	[N]	--	7283	7283	7283	7283	7283	7283	7283	7283
Maximum Tilting Moment Load	[Nm]	--	1216.3	1216.3	1216.3	1216.3	1216.3	1216.3	1216.3	1216.3
Efficiency	[%]	--	72	72	72	72	72	72	72	72
Protection Class	--	*4	IP54 (IP65)							

*1) At nominal input speed
*2) Speeds are at the actuator input. Limits when used with additional gearbox are higher
*3) At input shaft
*4) IP65 (wash-down) is available as an option. Contact Nidec Drive Technology for more details and our food grade options

STR 160 Dimensions with VRB 115

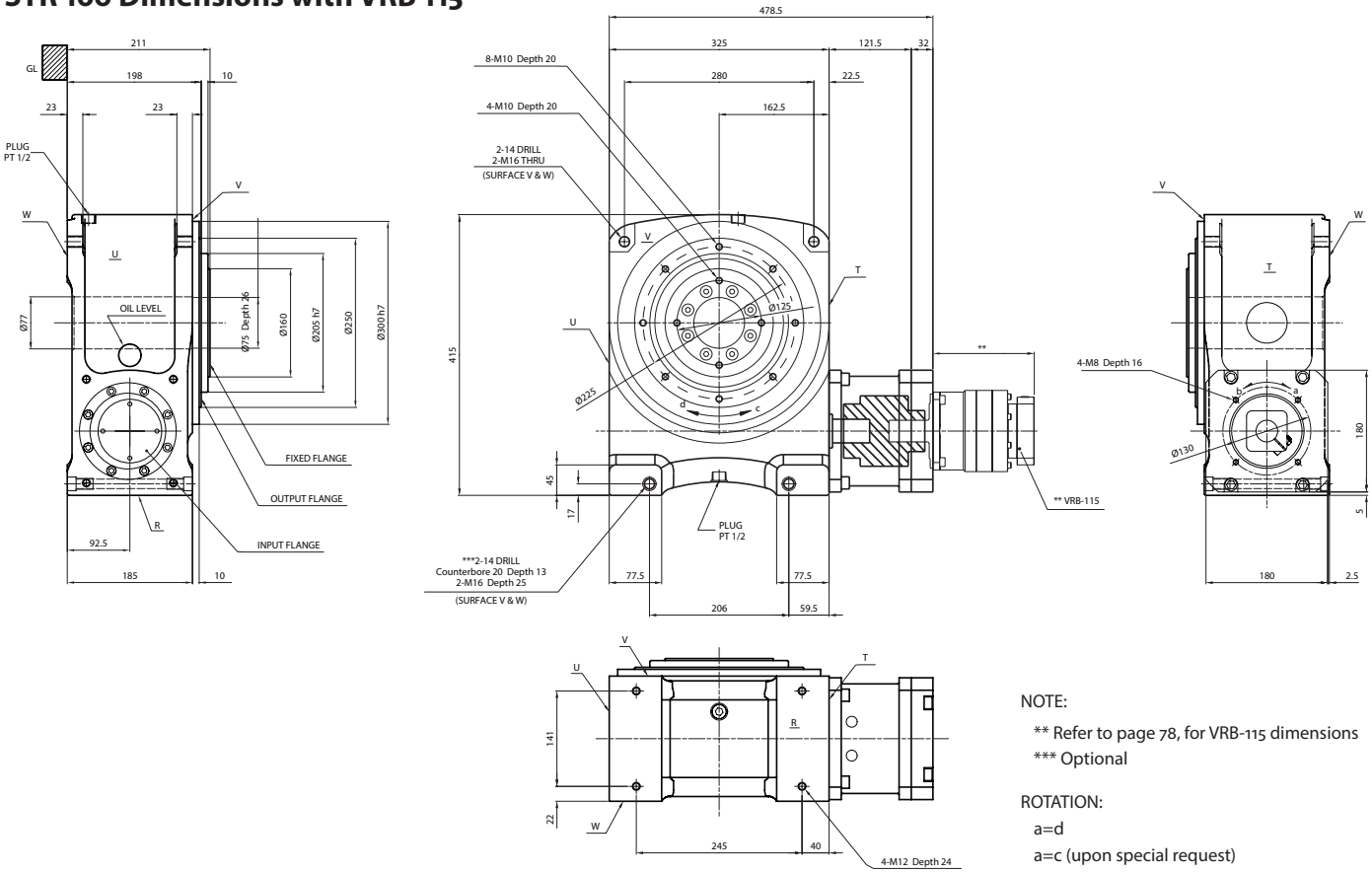

NOTE:

** Refer to page 78, for VRB-115 dimensions
*** Optional

ROTATION:

a=d
a=c (upon special request)

STR

STR 160E 1-Stage and 2-Stage Specifications with EVB 115

Frame Size			**160E**							
Stage			**1-Stage**	**2-Stage**						
Ratio	Units	Notes	20	60	80	100	120	140	160	180
Nominal Torque	[Nm]	*1	1165	1165	1165	1165	1165	1165	1165	1165
Acceleration Torque	[Nm]	--	1888	1888	1888	1888	1888	1888	1888	1888
No Load Torque	[Nm]	*1	6.6	2.2	2.2	2.2	2.2	2.2	2.2	2.2
Nominal Input Speed	[rpm]	*2	500	1500	2000	2500	3000	3000	3000	3000
Maximum Input Speed	[rpm]	*2	1000	3000	4000	5000	6000	6000	6000	6000
Reflected Inertia (Single)	[kg-m^{2}x10^{-4}]	*3	46.99	--	--	--	--	--	--	--
Reflected Inertia (≤Ø 14)	[kg-m^{2}x10^{-4}]	*3	--	--	--	--	--	--	--	--
Reflected Inertia (≤Ø 19)	[kg-m^{2}x10^{-4}]	*3	--	6.857	5.607	5.137	4.887	4.767	4.667	4.607
Reflected Inertia (≤Ø 28)	[kg-m^{2}x10^{-4}]	*3	--	8.457	7.197	6.727	6.477	6.357	6.257	6.197
Reflected Inertia (≤Ø 38)	[kg-m^{2}x10^{-4}]	*3	--	15.53	14.27	13.81	13.55	13.43	13.34	13.28
Backlash	[arc-min]	--	0	0	0	0	0	0	0	0
Angular Transmission Accuracy	[arc-min]	--	≤ 1.5	≤ 1.5						
Angular Repeatability Accuracy	[arc-min]	--	± 0.15	± 0.15						
Surface Runout	[µm (max)]	--	20	20	20	20	20	20	20	20
Weight	[kg]	--	126	137	137	137	137	137	137	137
Maximum Axial Load	[N]	--	17170	17170	17170	17170	17170	17170	17170	17170
Maximum Radial Load	[N]	--	7283	7283	7283	7283	7283	7283	7283	7283
Maximum Tilting Moment Load	[Nm]	--	1216.3	1216.3	1216.3	1216.3	1216.3	1216.3	1216.3	1216.3
Efficiency	[%]	--	80	72	72	72	72	72	72	72
Protection Class	--	*4	IP54 (IP65)							

*1) At nominal input speed
*2) Speeds are at the actuator input. Limits when used with additional gearbox are higher
*3) At input shaft
*4) IP65 (wash-down) is available as an option. Contact Nidec Drive Technology for more details and our food grade options

STR 160E 2-Stage and 3-Stage Specifications with EVB 115

Frame Size			**160E**							
Stage			**2-Stage**	**3-Stage**						
Ratio	Units	Notes	200	300	320	400	500	560	600	700
Nominal Torque	[Nm]	*1	1165	1165	1165	1165	1165	1165	1165	1165
Acceleration Torque	[Nm]	--	1888	1888	1888	1888	1888	1888	1888	1888
No Load Torque	[Nm]	*1	2.2	1.4	1.4	1.4	1.4	1.4	1.4	1.4
Nominal Input Speed	[rpm]	*2	3000	3000	3000	3000	3000	3000	3000	3000
Maximum Input Speed	[rpm]	*2	6000	6000	6000	6000	6000	6000	6000	6000
Reflected Inertia (Single)	[kg-m^{2}x10^{-4}]	*3	--	--	--	--	--	--	--	--
Reflected Inertia (≤Ø 14)	[kg-m^{2}x10^{-4}]	*3	--	2.367	2.577	2.317	2.297	2.517	1.987	2.277
Reflected Inertia (≤Ø 19)	[kg-m^{2}x10^{-4}]	*3	4.577	2.697	2.907	2.647	2.627	2.847	2.317	2.607
Reflected Inertia (≤Ø 28)	[kg-m^{2}x10^{-4}]	*3	6.167	4.817	5.027	4.767	4.757	4.977	4.447	4.737
Reflected Inertia (≤Ø 38)	[kg-m^{2}x10^{-4}]	*3	13.24	--	--	--	--	--	--	--
Backlash	[arc-min]	--	0	0	0	0	0	0	0	0
Angular Transmission Accuracy	[arc-min]	--	≤ 1.5	≤ 1.5						
Angular Repeatability Accuracy	[arc-min]	--	± 0.15	± 0.15						
Surface Runout	[µm (max)]	--	20	20	20	20	20	20	20	20
Weight	[kg]	--	137	136	136	136	136	136	136	136
Maximum Axial Load	[N]	--	17170	17170	17170	17170	17170	17170	17170	17170
Maximum Radial Load	[N]	--	7283	7283	7283	7283	7283	7283	7283	7283
Maximum Tilting Moment Load	[Nm]	--	1216.3	1216.3	1216.3	1216.3	1216.3	1216.3	1216.3	1216.3
Efficiency	[%]	--	72	68	68	68	68	68	68	68
Protection Class	--	*4	IP54 (IP65)							

*1) At nominal input speed
*2) Speeds are at the actuator input. Limits when used with additional gearbox are higher
*3) At input shaft
*4) IP65 (wash-down) is available as an option. Contact Nidec Drive Technology for more details and our food grade options

STR 160E 3-Stage Specifications with EVB 115

Frame Size	160E									
Stage	**3-Stage**									
Ratio	Units	Notes	800	900	1000	1200	1400	1600	1800	2000
Nominal Torque	[Nm]	*1	1165	1165	1165	1165	1165	1165	1165	1165
Acceleration Torque	[Nm]	--	1888	1888	1888	1888	1888	1888	1888	1888
No Load Torque	[Nm]	*1	1.4	1.4	1.4	1.4	1.4	1.4	1.4	1.4
Nominal Input Speed	[rpm]	*2	3000	3000	3000	3000	3000	3000	3000	3000
Maximum Input Speed	[rpm]	*2	6000	6000	6000	6000	6000	6000	6000	6000
Reflected Inertia (Single)	[kg-m^{2}x10^{-4}]	*3	--	--	--	--	--	--	--	--
Reflected Inertia (≤Ø 14)	[kg-m^{2}x10^{-4}]	*3	1.977	2.267	1.977	1.967	1.967	1.967	1.967	1.967
Reflected Inertia (≤Ø 19)	[kg-m^{2}x10^{-4}]	*3	2.307	2.597	2.307	2.297	2.297	2.297	2.297	2.297
Reflected Inertia (≤Ø 28)	[kg-m^{2}x10^{-4}]	*3	4.437	4.727	4.427	4.427	4.427	4.427	4.427	4.427
Reflected Inertia (≤Ø 38)	[kg-m^{2}x10^{-4}]	*3	--	--	--	--	--	--	--	--
Backlash	[arc-min]	--	0	0	0	0	0	0	0	0
Angular Transmission Accuracy	[arc-min]	--	≤ 1.5							
Angular Repeatability Accuracy	[arc-min]	--	± 0.15							
Surface Runout	[µm (max)]	--	20	20	20	20	20	20	20	20
Weight	[kg]	--	136	136	136	136	136	136	136	136
Maximum Axial Load	[N]	--	17170	17170	17170	17170	17170	17170	17170	17170
Maximum Radial Load	[N]	--	7283	7283	7283	7283	7283	7283	7283	7283
Maximum Tilting Moment Load	[Nm]	--	1216.3	1216.3	1216.3	1216.3	1216.3	1216.3	1216.3	1216.3
Efficiency	[%]	--	68	68	68	68	68	68	68	68
Protection Class	--	*4	IP54 (IP65)							

*1) At nominal input speed
*2) Speeds are at the actuator input. Limits when used with additional gearbox are higher
*3) At input shaft
*4) IP65 (wash-down) is available as an option. Contact Nidec Drive Technology for more details and our food grade options

STR 160 Dimensions with EVB 115

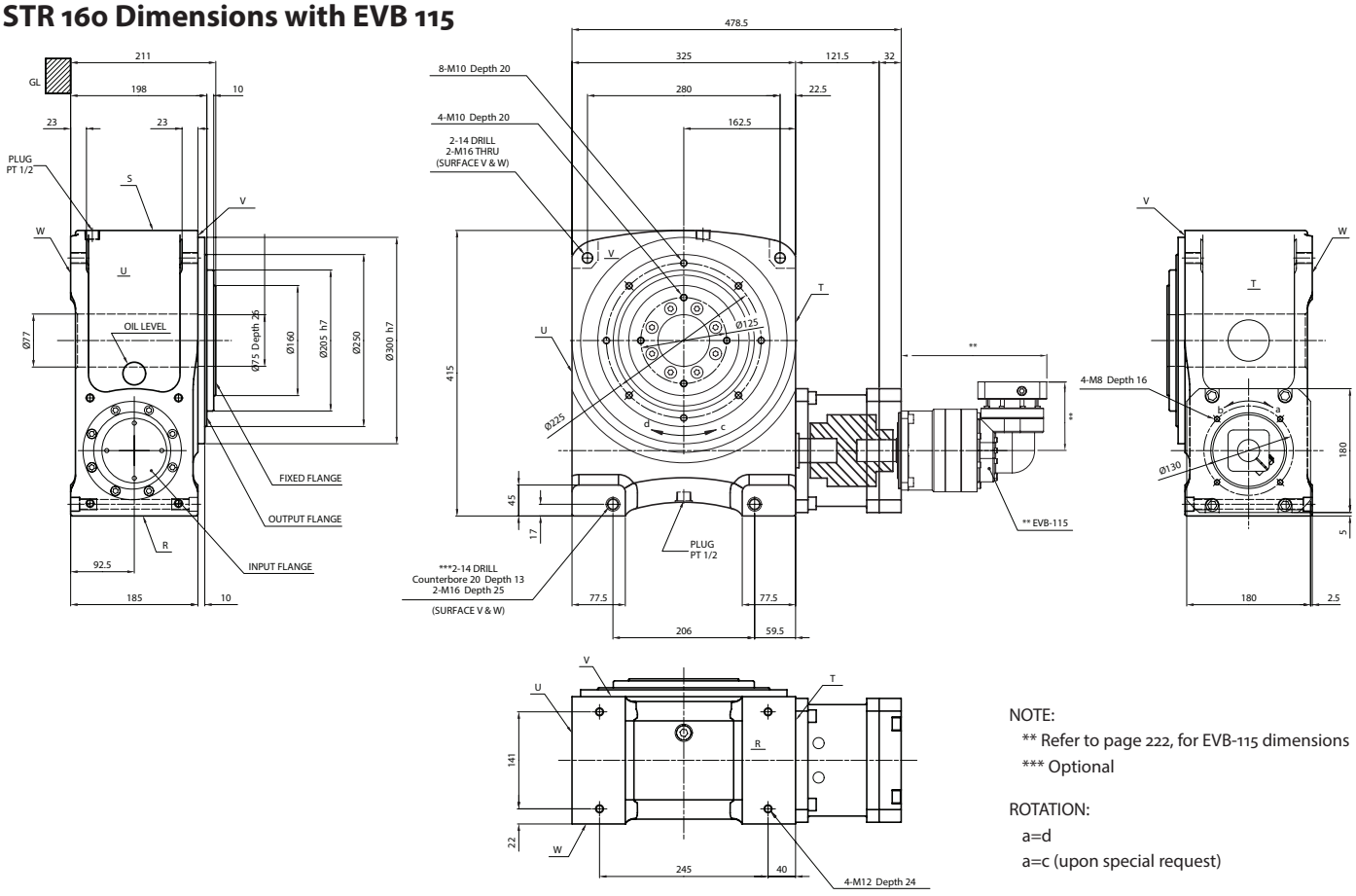

NOTE:
** Refer to page 222, for EVB-115 dimensions
*** Optional

ROTATION:
a=d
a=c (upon special request)

STR

STR 250V 1-Stage and 2-Stage Specifications with VRB 180

Frame Size			**250V**							
Stage			**1-Stage**	**2-Stage**						
Ratio	Units	Notes	20	60	80	100	120	140	160	180
Nominal Torque	[Nm]	*1	4006	4006	4006	4006	4006	4006	4006	4006
Acceleration Torque	[Nm]	--	6072	6072	6072	6072	6072	6072	6072	6072
No Load Torque	[Nm]	*1	14.5	2.6	2.6	2.6	2.6	2.6	2.6	2.6
Nominal Input Speed	[rpm]	*2	400	1500	1500	1500	1500	1500	1500	1500
Maximum Input Speed	[rpm]	*2	800	3000	3000	3000	3000	3000	3000	3000
Reflected Inertia (Single)	[kg-m²x10⁻⁴]	*3	430.0	--	--	--	--	--	--	--
Reflected Inertia (≤Ø 28)	[kg-m²x10⁻⁴]	*3	--	--	--	--	--	--	--	--
Reflected Inertia (≤Ø 38)	[kg-m²x10⁻⁴]	*3	--	45.08	29.08	23.08	19.08	17.08	16.08	15.08
Reflected Inertia (≤Ø 48)	[kg-m²x10⁻⁴]	*3	--	67.08	51.08	45.08	42.08	39.08	38.08	37.08
Reflected Inertia (≤Ø 65)	[kg-m²x10⁻⁴]	*3	--	131.1	111.1	101.1	101.1	100.1	98.08	98.08
Backlash	[arc-min]	--	0	0	0	0	0	0	0	0
Angular Transmission Accuracy	[arc-min]	--	≤ 1.5	≤ 1.5						
Angular Repeatability Accuracy	[arc-min]	--	± 0.15	± 0.15						
Surface Runout	[µm (max)]	--	20	20	20	20	20	20	20	20
Weight	[kg]	--	383	419	419	419	419	419	419	419
Maximum Axial Load	[N]	--	38051	38051	38051	38051	38051	38051	38051	38051
Maximum Radial Load	[N]	--	11165	11165	11165	11165	11165	11165	11165	11165
Maximum Tilting Moment Load	[Nm]	--	2478.6	2478.6	2478.6	2478.6	2478.6	2478.6	2478.6	2478.6
Efficiency	[%]	--	80	76	76	76	76	76	76	76
Protection Class	--	*4	IP54 (IP65)							

*1) At nominal input speed
*2) Speeds are at the actuator input. Limits when used with additional gearbox are higher
*3) At input shaft
*4) IP65 (wash-down) is available as an option. Contact Nidec Drive Technology for more details and our food grade options

STR 250V 2-Stage and 3-Stage Specifications with VRB 180

Frame Size			**250V**							
Stage			**2-Stage**	**3-Stage**						
Ratio	Units	Notes	200	300	320	400	500	560	600	700
Nominal Torque	[Nm]	*1	4006	4006	4006	4006	4006	4006	4006	4006
Acceleration Torque	[Nm]	--	6072	6072	6072	6072	6072	6072	6072	6072
No Load Torque	[Nm]	*1	2.6	2.0	2.0	2.0	2.0	2.0	2.0	2.0
Nominal Input Speed	[rpm]	*2	1500	1500	1500	1500	1500	1500	1500	1500
Maximum Input Speed	[rpm]	*2	3000	3000	3000	3000	3000	3000	3000	3000
Reflected Inertia (Single)	[kg-m²x10⁻⁴]	*3	--	--	--	--	--	--	--	--
Reflected Inertia (≤Ø 28)	[kg-m²x10⁻⁴]	*3	--	5.775	6.475	5.475	5.275	5.975	4.275	5.175
Reflected Inertia (≤Ø 38)	[kg-m²x10⁻⁴]	*3	15.08	13.08	14.08	13.08	13.08	14.08	12.08	13.08
Reflected Inertia (≤Ø 48)	[kg-m²x10⁻⁴]	*3	37.08	35.08	36.08	35.08	35.08	36.08	34.08	35.08
Reflected Inertia (≤Ø 65)	[kg-m²x10⁻⁴]	*3	97.08	--	--	--	--	--	--	--
Backlash	[arc-min]	--	0	0	0	0	0	0	0	0
Angular Transmission Accuracy	[arc-min]	--	≤ 1.5	≤ 1.5						
Angular Repeatability Accuracy	[arc-min]	--	± 0.15	± 0.15						
Surface Runout	[µm (max)]	--	20	20	20	20	20	20	20	20
Weight	[kg]	--	419	420	420	420	420	420	420	420
Maximum Axial Load	[N]	--	38051	38051	38051	38051	38051	38051	38051	38051
Maximum Radial Load	[N]	--	11165	11165	11165	11165	11165	11165	11165	11165
Maximum Tilting Moment Load	[Nm]	--	2478.6	2478.6	2478.6	2478.6	2478.6	2478.6	2478.6	2478.6
Efficiency	[%]	--	76	72	72	72	72	72	72	72
Protection Class	--	*4	IP54 (IP65)							

*1) At nominal input speed
*2) Speeds are at the actuator input. Limits when used with additional gearbox are higher
*3) At input shaft
*4) IP65 (wash-down) is available as an option. Contact Nidec Drive Technology for more details and our food grade options

STR 250V 3-Stage Specifications with VRB 180

Frame Size	250V									
Stage	**3-Stage**									
Ratio	Units	Notes	800	900	1000	1200	1400	1600	1800	2000
Nominal Torque	[Nm]	*1	4006	4006	4006	4006	4006	4006	4006	4006
Acceleration Torque	[Nm]	--	6072	6072	6072	6072	6072	6072	6072	6072
No Load Torque	[Nm]	*1	2.0	2.0	2.0	2.0	2.0	2.0	2.0	2.0
Nominal Input Speed	[rpm]	*2	1500	1500	1500	1500	1500	1500	1500	1500
Maximum Input Speed	[rpm]	*2	3000	3000	3000	3000	3000	3000	3000	3000
Reflected Inertia (Single)	[kg-m^{2}x10^{-4}]	*3	--	--	--	--	--	--	--	--
Reflected Inertia (≤Ø 28)	[kg-m^{2}x10^{-4}]	*3	4.275	5.075	4.175	4.175	4.175	4.175	4.175	4.175
Reflected Inertia (≤Ø 38)	[kg-m^{2}x10^{-4}]	*3	12.08	13.08	12.08	12.08	12.08	12.08	12.08	12.08
Reflected Inertia (≤Ø 48)	[kg-m^{2}x10^{-4}]	*3	34.08	35.08	34.08	34.08	34.08	34.08	34.08	34.08
Reflected Inertia (≤Ø 65)	[kg-m^{2}x10^{-4}]	*3	--	--	--	--	--	--	--	--
Backlash	[arc-min]	--	0	0	0	0	0	0	0	0
Angular Transmission Accuracy	[arc-min]	--	≤ 1.5							
Angular Repeatability Accuracy	[arc-min]	--	± 0.15							
Surface Runout	[µm (max)]	--	20	20	20	20	20	20	20	20
Weight	[kg]	--	420	420	420	420	420	420	420	420
Maximum Axial Load	[N]	--	38051	38051	38051	38051	38051	38051	38051	38051
Maximum Radial Load	[N]	--	11165	11165	11165	11165	11165	11165	11165	11165
Maximum Tilting Moment Load	[Nm]	--	2478.6	2478.6	2478.6	2478.6	2478.6	2478.6	2478.6	2478.6
Efficiency	[%]	--	72	72	72	72	72	72	72	72
Protection Class	--	*4	IP54 (IP65)							

*1) At nominal input speed
*2) Speeds are at the actuator input. Limits when used with additional gearbox are higher
*3) At input shaft
*4) IP65 (wash-down) is available as an option. Contact Nidec Drive Technology for more details and our food grade options

STR 250 Dimensions with VRB 180

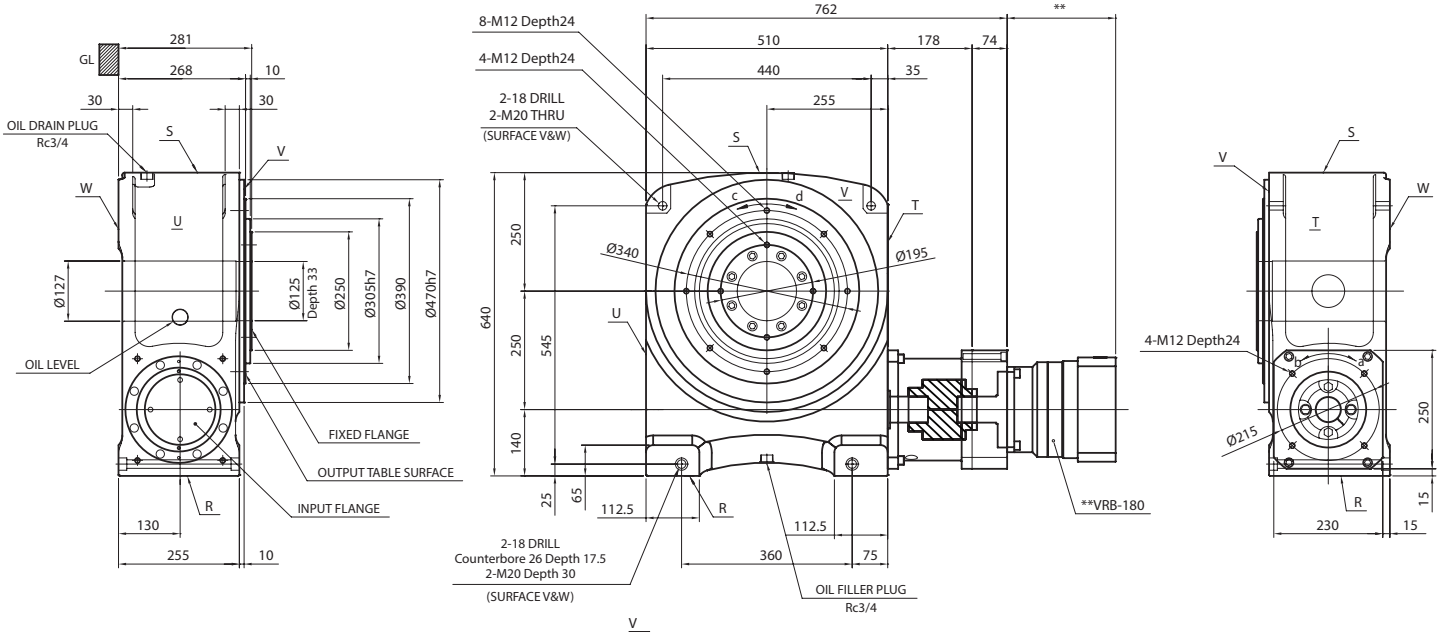

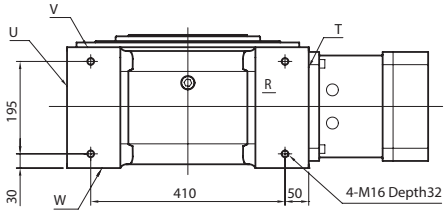

NOTE:
** Refer to page 86, for VRB-180 dimensions
*** Optional

ROTATION:
a=d
a=c (upon special request)

STR

STR 250E 1-Stage and 2-Stage Specifications with EVB 180

Frame Size			**250E**							
Stage			**1-Stage**	**2-Stage**						
Ratio	Units	Notes	20	60	80	100	120	140	160	180
Nominal Torque	[Nm]	*1	4006	4006	4006	4006	4006	4006	4006	4006
Acceleration Torque	[Nm]	--	6072	6072	6072	6072	6072	6072	6072	6072
No Load Torque	[Nm]	*1	14.5	11.5	11.5	11.5	11.5	11.5	11.5	11.5
Nominal Input Speed	[rpm]	*2	400	1500	1500	1500	1500	1500	1500	1500
Maximum Input Speed	[rpm]	*2	800	3000	3000	3000	3000	3000	3000	3000
Reflected Inertia (Single)	[kg-m²x10⁻⁴]	*3	430.041	--	--	--	--	--	--	--
Reflected Inertia (≤Ø 14)	[kg-m²x10⁻⁴]	*3	--	--	--	--	--	--	--	--
Reflected Inertia (≤Ø 19)	[kg-m²x10⁻⁴]	*3	--	94.785	78.795	72.965	69.815	67.505	66.345	65.675
Reflected Inertia (≤Ø 28)	[kg-m²x10⁻⁴]	*3	--	129.675	113.675	107.875	104.675	102.375	101.175	100.535
Reflected Inertia (≤Ø 38)	[kg-m²x10⁻⁴]	*3	--	215.275	199.275	193.475	190.275	187.975	186.775	186.175
Backlash	[arc-min]	--	0	0	0	0	0	0	0	0
Angular Transmission Accuracy	[arc-min]	--	≤ 1.5	≤ 1.5						
Angular Repeatability Accuracy	[arc-min]	--	± 0.15	± 0.15						
Surface Runout	[µm (max)]	--	20	20	20	20	20	20	20	20
Weight	[kg]	--	383	432	432	432	432	432	432	432
Maximum Axial Load	[N]	--	38051	38051	38051	38051	38051	38051	38051	38051
Maximum Radial Load	[N]	--	11165	11165	11165	11165	11165	11165	11165	11165
Maximum Tilting Moment Load	[Nm]	--	2478.6	2478.6	2478.6	2478.6	2478.6	2478.6	2478.6	2478.6
Efficiency	[%]	--	80	72	72	72	72	72	72	72
Protection Class	--	*4	IP54 (IP65)							

*1) At nominal input speed
*2) Speeds are at the actuator input. Limits when used with additional gearbox are higher
*3) At input shaft
*4) IP65 (wash-down) is available as an option. Contact Nidec Drive Technology for more details and our food grade options

STR 250E 2-Stage and 3-Stage Specifications with EVB 180

Frame Size			**250E**							
Stage			**2-Stage**	**3-Stage**						
Ratio	Units	Notes	200	300	320	400	500	560	600	700
Nominal Torque	[Nm]	*1	4006	4006	4006	4006	4006	4006	4006	4006
Acceleration Torque	[Nm]	--	6072	6072	6072	6072	6072	6072	6072	6072
No Load Torque	[Nm]	*1	11.5	5.4	5.4	5.4	5.4	5.4	5.4	5.4
Nominal Input Speed	[rpm]	*2	1500	1500	1500	1500	1500	1500	1500	1500
Maximum Input Speed	[rpm]	*2	3000	3000	3000	3000	3000	3000	3000	3000
Reflected Inertia (Single)	[kg-m²x10⁻⁴]	*3	--	--	--	--	--	--	--	--
Reflected Inertia (≤Ø 14)	[kg-m²x10⁻⁴]	*3	--	12.565	13.165	12.225	12.055	12.665	11.405	11.905
Reflected Inertia (≤Ø 19)	[kg-m²x10⁻⁴]	*3	65.355	21.355	21.955	21.015	20.845	21.455	20.185	20.695
Reflected Inertia (≤Ø 28)	[kg-m²x10⁻⁴]	*3	100.215	26.175	26.775	25.835	25.665	26.275	25.015	25.515
Reflected Inertia (≤Ø 38)	[kg-m²x10⁻⁴]	*3	185.775	--	--	--	--	--	--	--
Backlash	[arc-min]	--	0	0	0	0	0	0	0	0
Angular Transmission Accuracy	[arc-min]	--	≤ 1.5	≤ 1.5						
Angular Repeatability Accuracy	[arc-min]	--	± 0.15	± 0.15						
Surface Runout	[µm (max)]	--	20	20	20	20	20	20	20	20
Weight	[kg]	--	432	419	419	419	419	419	419	419
Maximum Axial Load	[N]	--	38051	38051	38051	38051	38051	38051	38051	38051
Maximum Radial Load	[N]	--	11165	11165	11165	11165	11165	11165	11165	11165
Maximum Tilting Moment Load	[Nm]	--	2478.6	2478.6	2478.6	2478.6	2478.6	2478.6	2478.6	2478.6
Efficiency	[%]	--	72	68	68	68	68	68	68	68
Protection Class	--	*4	IP54 (IP65)							

*1) At nominal input speed
*2) Speeds are at the actuator input. Limits when used with additional gearbox are higher
*3) At input shaft
*4) IP65 (wash-down) is available as an option. Contact Nidec Drive Technology for more details and our food grade options

STR 250E 3-Stage Specifications with EVB 180

Frame Size	250E									
Stage	**3-Stage**									
Ratio	Units	Notes	800	900	1000	1200	1400	1600	1800	2000
Nominal Torque	[Nm]	*1	4006	4006	4006	4006	4006	4006	4006	4006
Acceleration Torque	[Nm]	--	6072	6072	6072	6072	6072	6072	6072	6072
No Load Torque	[Nm]	*1	5.4	5.4	5.4	5.4	5.4	5.4	5.4	5.4
Nominal Input Speed	[rpm]	*2	1500	1500	1500	1500	1500	1500	1500	1500
Maximum Input Speed	[rpm]	*2	3000	3000	3000	3000	3000	3000	3000	3000
Reflected Inertia (Single)	[kg-m^{2}x10^{-4}]	*3	--	--	--	--	--	--	--	--
Reflected Inertia (≤Ø 14)	[kg-m^{2}x10^{-4}]	*3	11.315	11.835	11.275	11.255	11.235	11.225	11.225	11.215
Reflected Inertia (≤Ø 19)	[kg-m^{2}x10^{-4}]	*3	20.105	20.625	20.065	20.035	20.025	20.015	20.005	20.005
Reflected Inertia (≤Ø 28)	[kg-m^{2}x10^{-4}]	*3	24.925	25.445	24.885	24.855	24.845	24.835	24.825	24.825
Reflected Inertia (≤Ø 38)	[kg-m^{2}x10^{-4}]	*3	--	--	--	--	--	--	--	--
Backlash	[arc-min]	--	0	0	0	0	0	0	0	0
Angular Transmission Accuracy	[arc-min]	--	≤ 1.5							
Angular Repeatability Accuracy	[arc-min]	--	± 0.15							
Surface Runout	[µm (max)]	--	20	20	20	20	20	20	20	20
Weight	[kg]	--	419	419	419	419	419	419	419	419
Maximum Axial Load	[N]	--	38051	38051	38051	38051	38051	38051	38051	38051
Maximum Radial Load	[N]	--	11165	11165	11165	11165	11165	11165	11165	11165
Maximum Tilting Moment Load	[Nm]	--	2478.6	2478.6	2478.6	2478.6	2478.6	2478.6	2478.6	2478.6
Efficiency	[%]	--	68	68	68	68	68	68	68	68
Protection Class	--	*4	IP54 (IP65)							

*1) At nominal input speed
*2) Speeds are at the actuator input. Limits when used with additional gearbox are higher
*3) At input shaft
*4) IP65 (wash-down) is available as an option. Contact Nidec Drive Technology for more details and our food grade options

STR 250 Dimensions with EVB 180

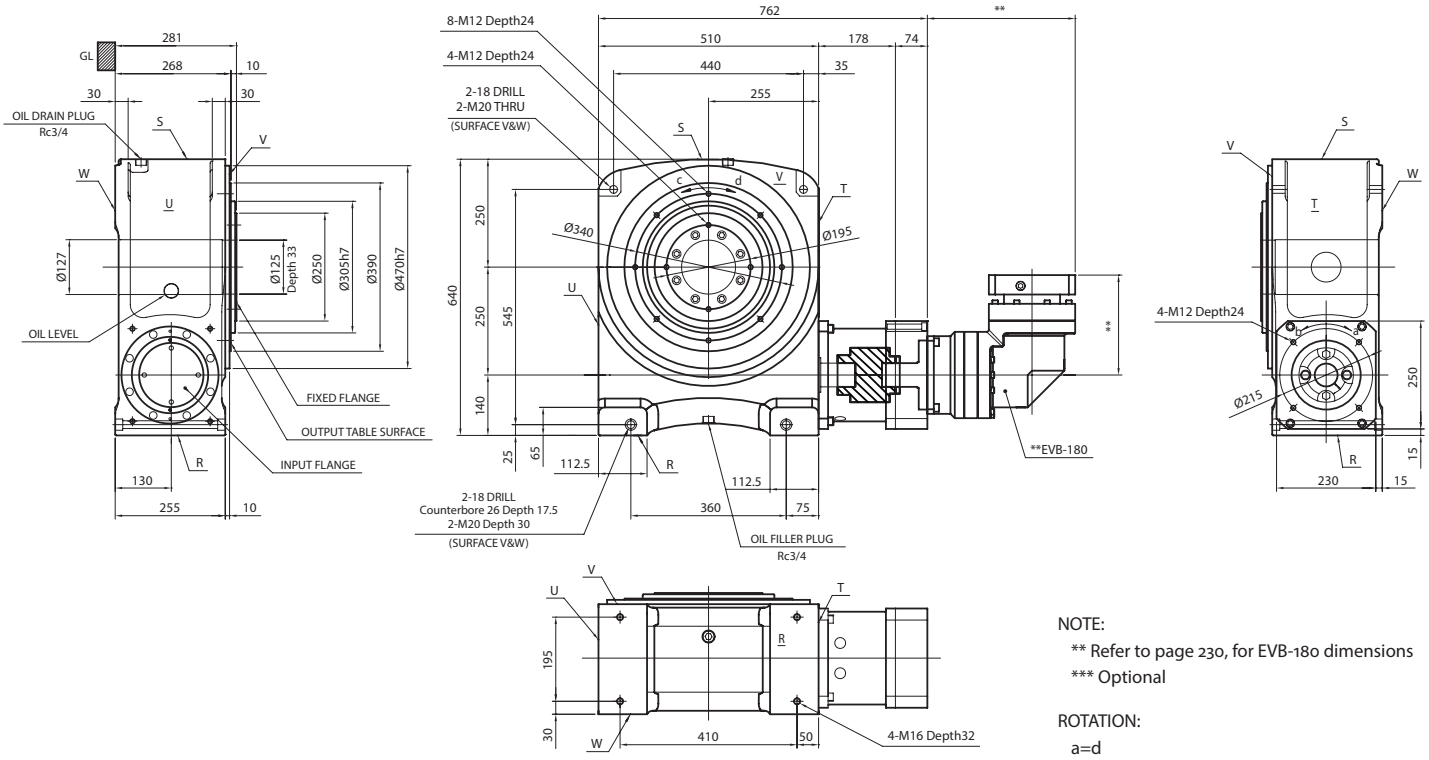

NOTE:
** Refer to page 230, for EVB-180 dimensions
*** Optional

ROTATION:
a=d
a=c (upon special request)

STR

ERH SERIES

The ERH series is a compact, robust cycloidal reducer designed for servo applications.This product features high reduction ratios in a compact form factor. Its key advantage is exceptional shock load capacity, which eliminates the need to oversize the reducer for that requirement. The dual pin housing of the ERH cycloidal provides the ability to adjust one wheel against the other, allowing us to reduce the output shaft backlash to less than 6 arc-minutes. Rolling contact contributes to minimal friction and high efficiency. Torque transmission elements experience compression—they do not shear. The long output shaft bearing span provides solid overhung load capability.

The ERH is ideal for applications operating in heavier industrial environments, but requiring servomotor mounting and good accuracy. Its compactness offers advantages against helical gearing, which requires additional stages to achieve higher reduction ratios. Its high efficiency against worm gears allows our customers to downsize and still enjoy larger output power. The end result is longer service life and tremendous energy saving.

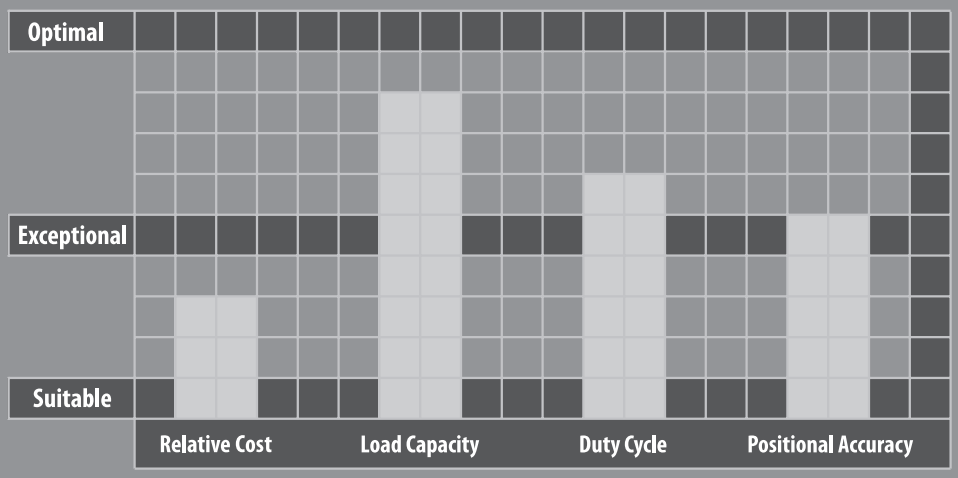

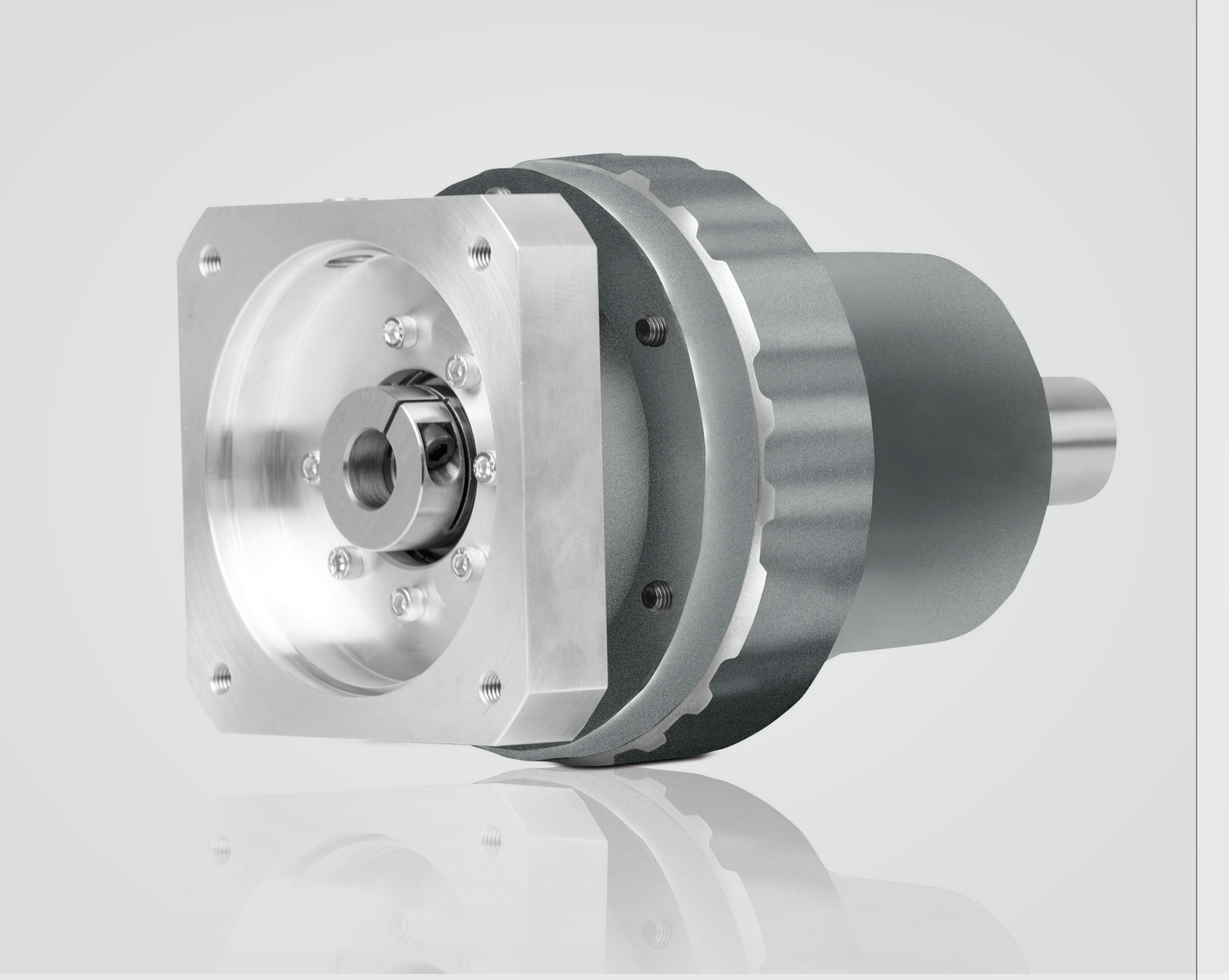

ERH SERIES

- High efficiency cycloidal reducer design
- Exceptional shock load capacity
- Various mounting options: Base, Flange, Ring, Hollow
- Reduction ratios up to 71:1 offered in a single stage
- Assembled in the USA

ERH Series Features

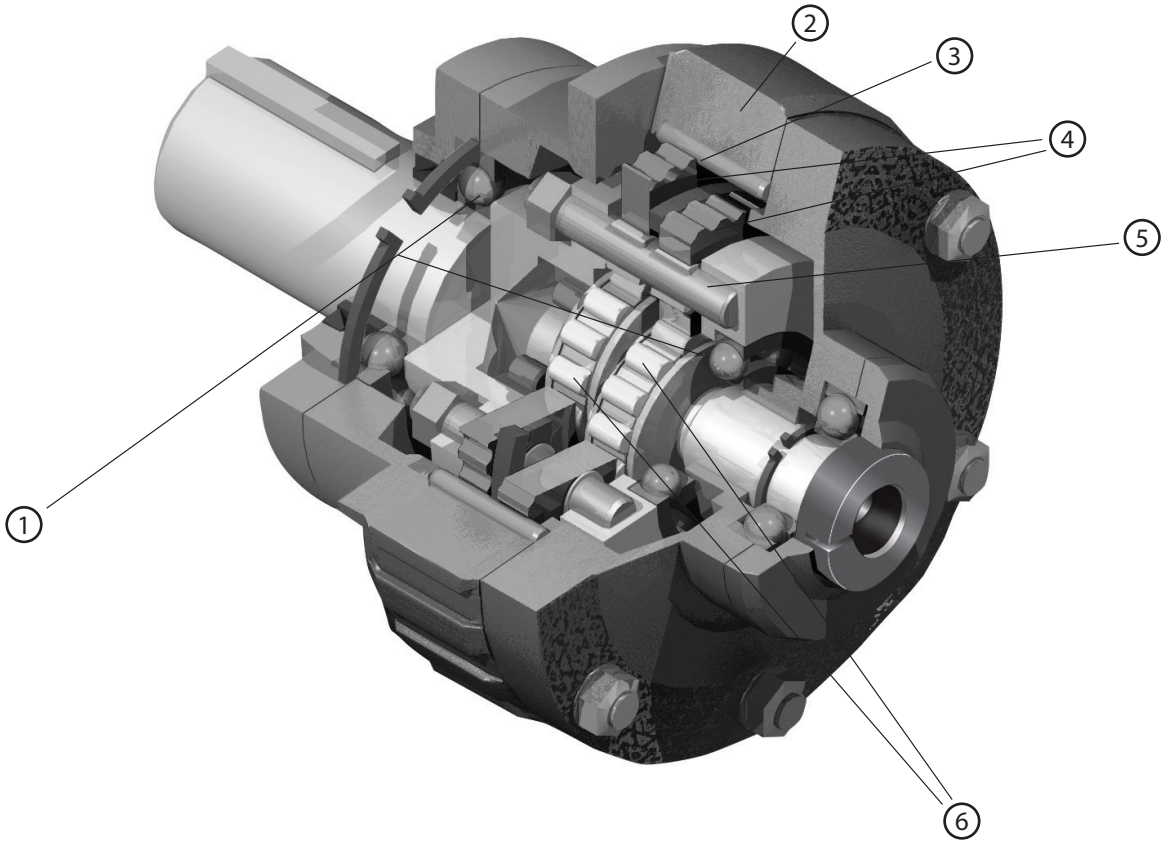

1. Output shaft bearings
2. Internal pin housing
3. Internal pins
4. Wheels
5. Carrier pins
6. Eccentric roller bearings

ERH Series Model Code

ERH – B – 17 – P – 19HB16 – B H

- **H** — Mounting position:
  - H: Horizontal
  - D: Vertical down
  - U: Vertical up
  - C: Ceiling
  - L: Wall feet left
  - R: Wall feet right
- **B** — Mounting type:
  - B: Base (foot)
  - F: Flange
  - R: Ring
  - H: Hollow output
- **19HB16** — * Motor mounting code
- **P** — Backlash
  - 0 : 60 arc-min
  - P : 6 arc-min
- **17** — Ratio: 11, 17, 29, 35, 47, 59, 71
- **B** — Frame Size: B, C, D
- **ERH** — Series

* Please contact us to assign mounting code for your motor.

ERH B Specifications

Frame Size	**B**								
Stage	**Single Stage**								
Ratio	Units	Note	11	17	29	35	47	59	71
Nominal Output Torque	[Nm]	*1	80	87	105	101	107	105	102
Maximum Acceleration Torque	[Nm]	*2	120	131	158	152	161	158	153
Emergency Stop Torque	[Nm]	*3	200	218	263	251	267	261	254
Nominal Output Torque (Precision)	[Nm]	*1	60	75	79	75	78	80	76
Maximum Acceleration Torque (Precision)	[Nm]	*2	90	113	118	113	117	120	114
Emergency Stop Torque (Precision)	[Nm]	*3	150	188	197	189	196	200	190
Nominal Input Speed	[rpm]	*4	3000						
Maximum Input Speed	[rpm]	*5	4000						
No Load Running Torque	[Nm]	*6	0.4						
Permitted Radial Load	[N]	*7	4150	4750	5650	5690	5690	5690	5690
Permitted Axial Load	[N]	*8	2070	2380	2820	2840	2840	2840	2840
Maximum Radial Load	[N]	*9	5690						
Maximum Axial Load	[N]	*10	2840						
Moment of Inertia (≤Ø 19)	[kgcm2]	--	0.705	0.958	0.916	0.916	0.916	0.916	0.916
Efficiency	[%]	*11	90						
Torsional Rigidity	[Nm/arcmin]	*12	3.0	4.7	5.0	5.4	5.4	5.4	5.4
Backlash (Standard)	[Arc-min]	--	≤ 60						
Backlash (Precision)	[Arc-min]	--	≤ 6						
Noise Level	[dB]	*13	≤ 71						
Protection Class	--	*14	IP41 (IP65)						
Ambient Temperature	[°C]	--	0-40						
Permitted Housing Temperature	[°C]	--	90						
Lubrication	--	--	Oil (=>2000rpm & Precision) / Grease (<2000rpm)						
Weight	[kg]	*15	19						

*1) At nominal input speed, service life is 20,000 hours
*2) The maximum torque when starting or stopping operation
*3) The maximum torque allowed under a stress situation (Permitted 1,000 times during service life)
*4) The average input speed
*5) The maximum intermittent input speed
*6) Torque at no load applied to the input shaft at nominal input speed
*7) At this load and nominal input speed, service life will be 20,000 hours. (The radial load applied to the output side shaft center)
*8) At this load and nominal input speed, service life will be 20,000 hours. (The axial load applied to the output side bearing)
*9) The maximum radial load that the gearbox can accept
*10) The maximum axial load that the gearbox can accept
*11) The efficiency at the nominal output torque rating
*12) This does not include lost motion
*13) Contact Nidec Drive Technology for the testing conditions and environment
*14) IP65 (wash-down) is available as an option. Contact Nidec Drive Technology for more details
*15) The weight may vary slightly between models

ERH B Dimensions

Base Mount

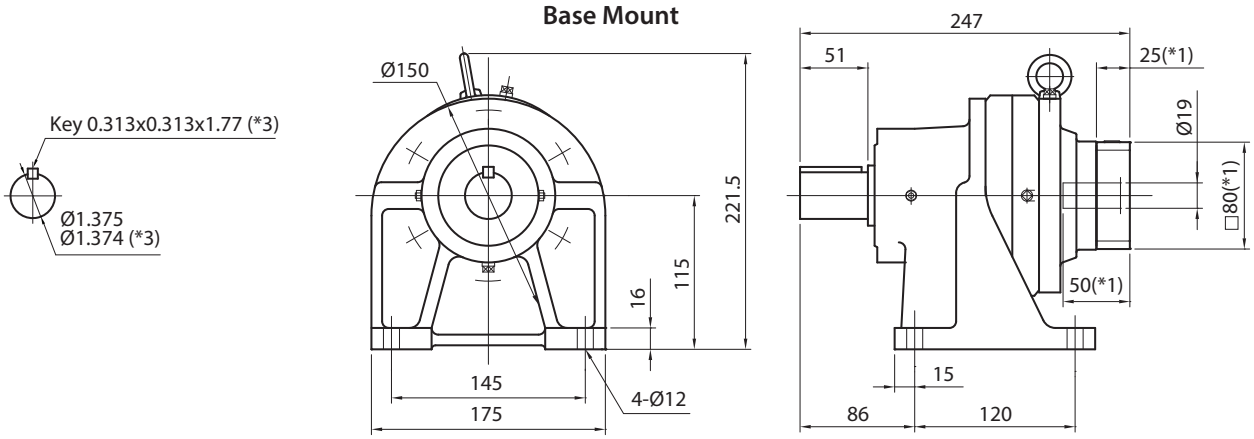

Flange Mount

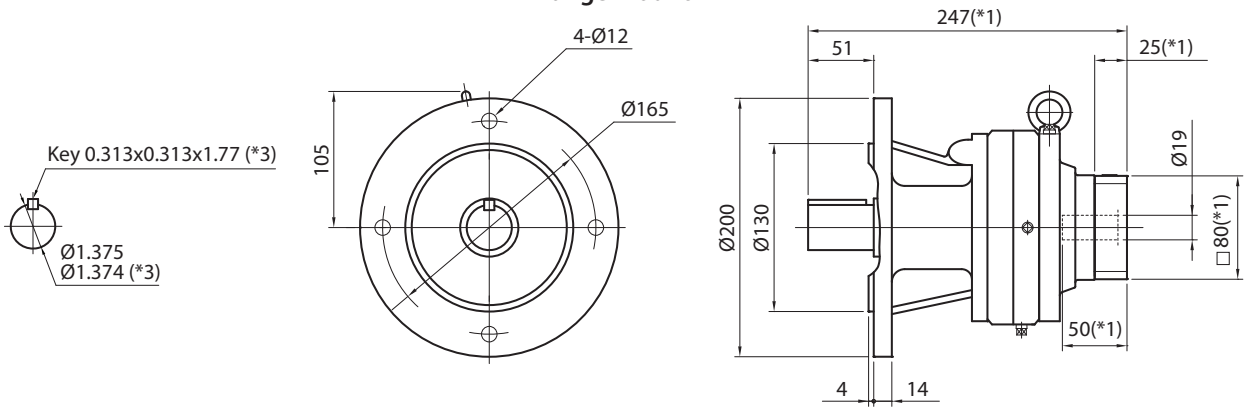

Ring Mount

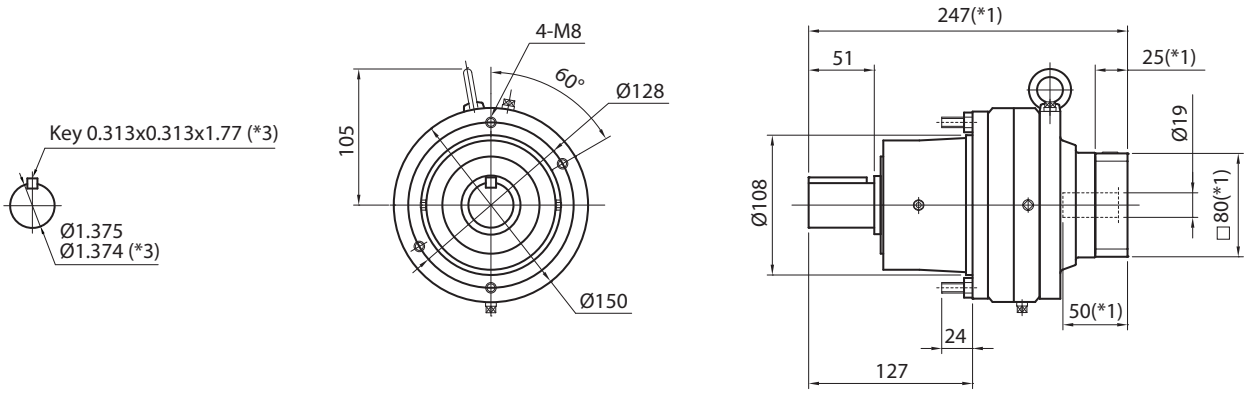

Hollow Mount

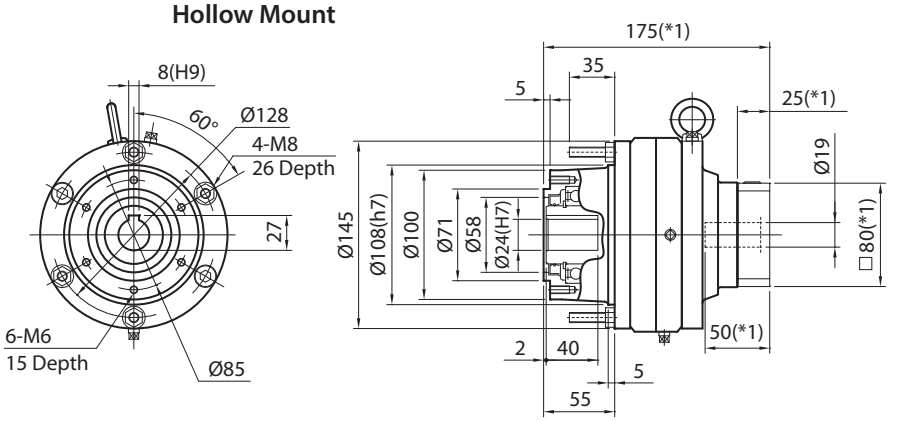

*1) Length will vary depending on motor

*2) Bushing will be inserted to adapt to input shaft

*3) Unit is in inches of measurement

ERH C Specifications

Frame Size	**C**								
Stage	**Single Stage**								
Ratio	Units	Note	11	17	29	35	47	59	71
Nominal Output Torque	[Nm]	*1	173	233	249	276	286	286	285
Maximum Acceleration Torque	[Nm]	*2	260	350	374	414	429	429	428
Emergency Stop Torque	[Nm]	*3	434	583	622	690	715	715	713
Nominal Output Torque (Precision)	[Nm]	*1	122	175	187	207	214	214	214
Maximum Acceleration Torque (Precision)	[Nm]	*2	183	263	281	311	321	321	321
Emergency Stop Torque (Precision)	[Nm]	*3	306	437	467	517	536	536	535
Nominal Input Speed	[rpm]	*4	3000						
Maximum Input Speed	[rpm]	*5	4000						
No Load Running Torque	[Nm]	*6	0.9						
Permitted Radial Load	[N]	*7	6270	7690	8670	9380	10140	10850	11560
Permitted Axial Load	[N]	*8	3130	3840	4330	4690	5070	5420	5780
Maximum Radial Load	[N]	*9	12270						
Maximum Axial Load	[N]	*10	6130						
Moment of Inertia (≤Ø 28)	[kgcm2]	--	3.733	4.027	4.786	4.744	4.701	4.701	4.701
Efficiency	[%]	*11	90						
Torsional Rigidity	[Nm/arcmin]	*12	6.2	11.2	11.9	12.6	12.6	12.6	12.6
Backlash (Standard)	[Arc-min]	--	≤ 60						
Backlash (Precision)	[Arc-min]	--	≤ 6						
Noise Level	[dB]	*13	≤ 75						
Protection Class	--	*14	IP41 (IP65)						
Ambient Temperature	[°C]	--	0-40						
Permitted Housing Temperature	[°C]	--	90						
Lubrication	--	--	Oil (=>2000rpm & Precision) / Grease (<2000rpm)						
Weight	[kg]	*15	43						

*1) At nominal input speed, service life is 20,000 hours
*2) The maximum torque when starting or stopping operation
*3) The maximum torque allowed under a stress situation (Permitted 1,000 times during service life)
*4) The average input speed
*5) The maximum intermittent input speed
*6) Torque at no load applied to the input shaft at nominal input speed
*7) At this load and nominal input speed, service life will be 20,000 hours. (The radial load applied to the output side shaft center)
*8) At this load and nominal input speed, service life will be 20,000 hours. (The axial load applied to the output side bearing)
*9) The maximum radial load that the gearbox can accept
*10) The maximum axial load that the gearbox can accept
*11) The efficiency at the nominal output torque rating
*12) This does not include lost motion
*13) Contact Nidec Drive Technology for the testing conditions and environment
*14) IP65 (wash-down) is available as an option. Contact Nidec Drive Technology for more details
*15) The weight may vary slightly between models

ERH C Dimensions

Base Mount

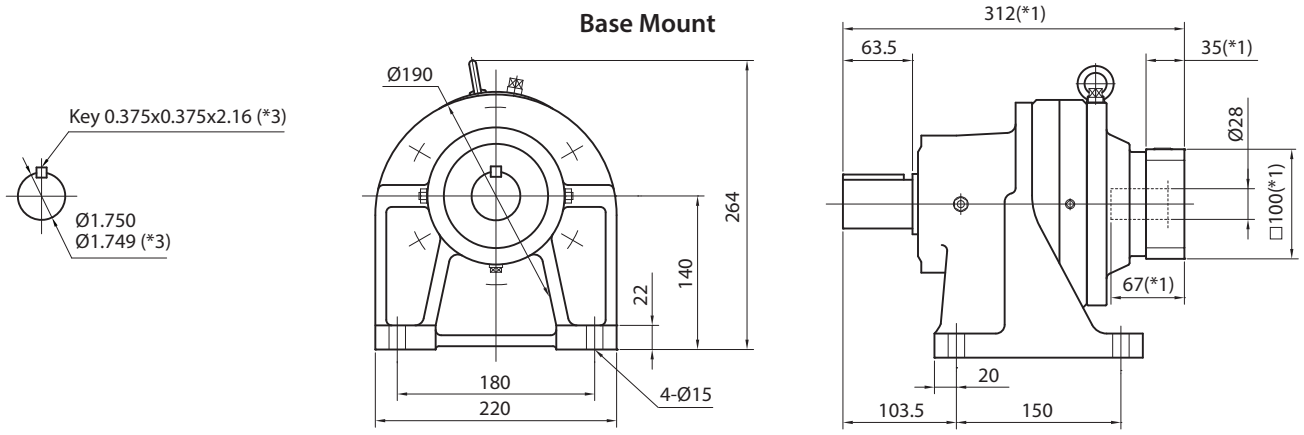

Flange Mount

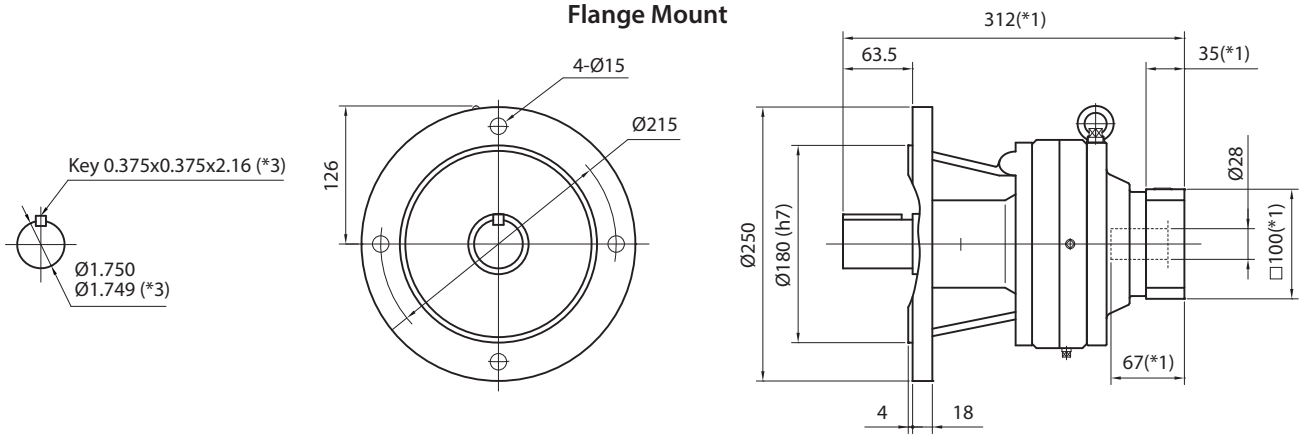

Ring Mount

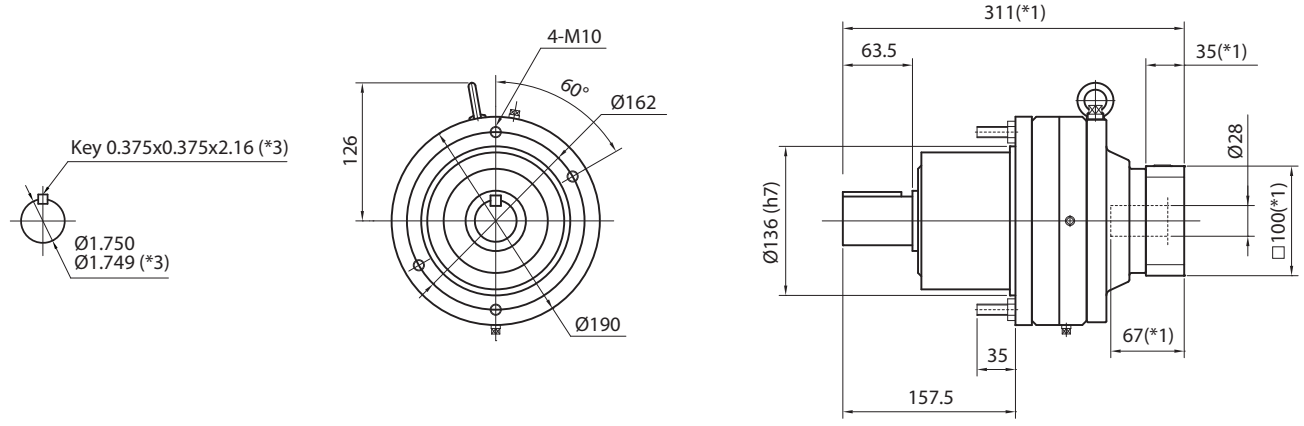

Hollow Mount

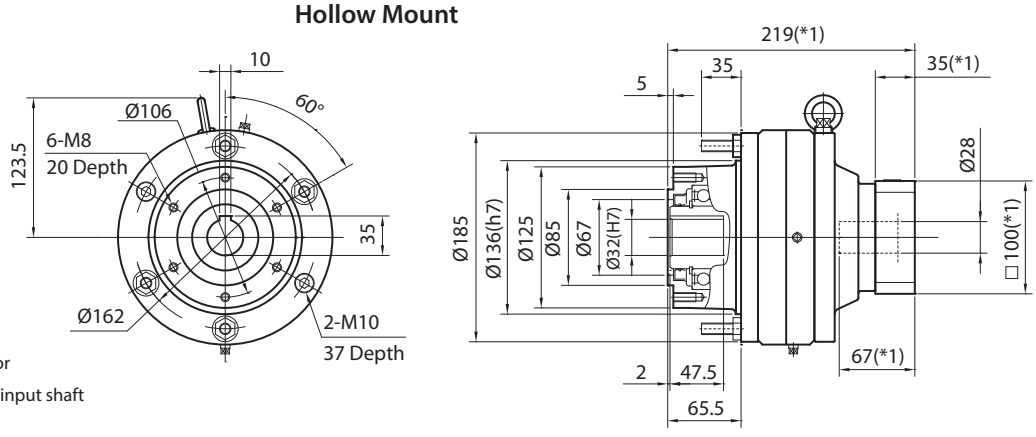

*1) Length will vary depending on motor

*2) Bushing will be inserted to adapt to input shaft

*3) Unit is in inches of measurement

ERH D Specifications

Frame Size	**D**								
Stage	**Single Stage**								
Ratio	Units	Note	11	17	29	35	47	59	71
Nominal Output Torque	[Nm]	*1	383	495	533	570	633	609	582
Maximum Acceleration Torque	[Nm]	*2	575	743	800	855	950	914	873
Emergency Stop Torque	[Nm]	*3	957	1,240	1,330	1,420	1,580	1,520	1,460
Nominal Output Torque (Precision)	[Nm]	*1	287	349	376	402	447	430	411
Maximum Acceleration Torque (Precision)	[Nm]	*2	431	524	564	603	671	645	617
Emergency Stop Torque (Precision)	[Nm]	*3	718	872	940	1,010	1,120	1,070	1,030
Nominal Input Speed	[rpm]	*4	3000						
Maximum Input Speed	[rpm]	*5	4000						
No Load Running Torque	[Nm]	*6	1.9						
Permitted Radial Load	[N]	*7	11960	13740	15920	16630	18060	20240	20950
Permitted Axial Load	[N]	*8	5980	6870	7960	8310	9030	10120	10470
Maximum Radial Load	[N]	*9	22420						
Maximum Axial Load	[N]	*10	11210						
Moment of Inertia (≤Ø 28)	[kgcm2]	--	5.08	7.21	7.88	7.71	7.71	7.71	7.54
Moment of Inertia (≤ Ø 38)	[kgcm2]	--	7.75	11.00	12.01	11.75	11.75	11.75	11.50
Efficiency	[%]	*11	90						
Torsional Rigidity	[Nm/arcmin]	*12	17.8	23.0	25.2	27.4	27.4	27.4	27.4
Backlash (Standard)	[Arc-min]	--	≤ 60						
Backlash (Precision)	[Arc-min]	--	≤ 6						
Noise Level	[dB]	*13	≤ 78						
Protection Class	--	*14	IP41 (IP65)						
Ambient Temperature	[°C]	--	0-40						
Permitted Housing Temperature	[°C]	--	90						
Lubrication	--	--	Oil						
Weight	[kg]	*15	68						

*1) At nominal input speed, service life is 20,000 hours
*2) The maximum torque when starting or stopping operation
*3) The maximum torque allowed under a stress situation (Permitted 1,000 times during service life)
*4) The average input speed
*5) The maximum intermittent input speed
*6) Torque at no load applied to the input shaft at nominal input speed
*7) At this load and nominal input speed, service life will be 20,000 hours. (The radial load applied to the output side shaft center)
*8) At this load and nominal input speed, service life will be 20,000 hours. (The axial load applied to the output side bearing)
*9) The maximum radial load that the gearbox can accept
*10) The maximum axial load that the gearbox can accept
*11) The efficiency at the nominal output torque rating
*12) This does not include lost motion
*13) Contact Nidec Drive Technology for the testing conditions and environment
*14) IP65 (wash-down) is available as an option. Contact Nidec Drive Technology for more details
*15) The weight may vary slightly between models

ERH D Dimensions (Input Bore ≤Ø 28)

Base Mount

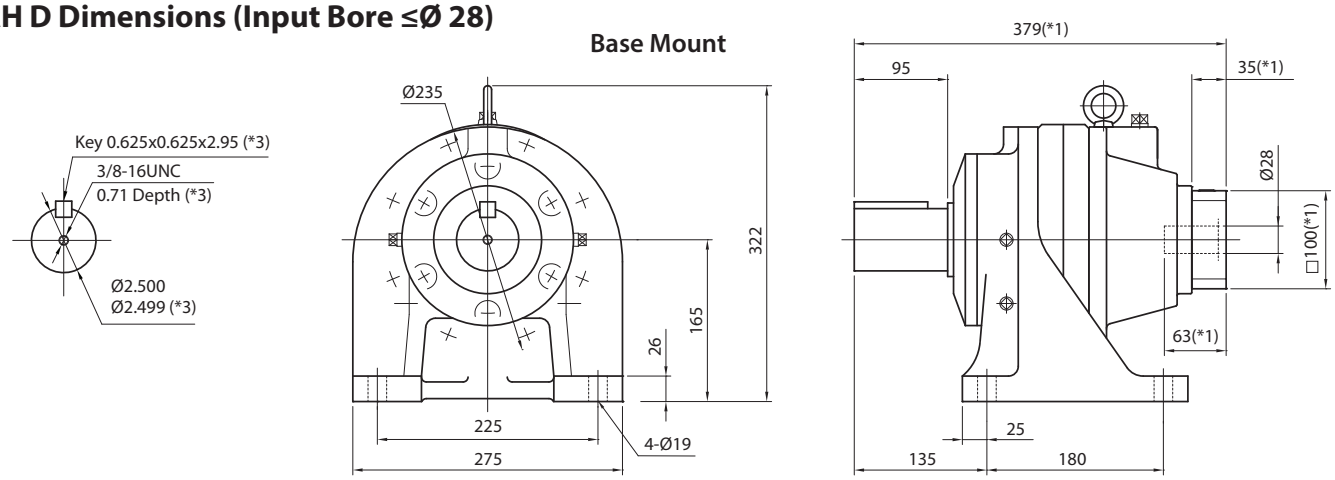

Flange Mount

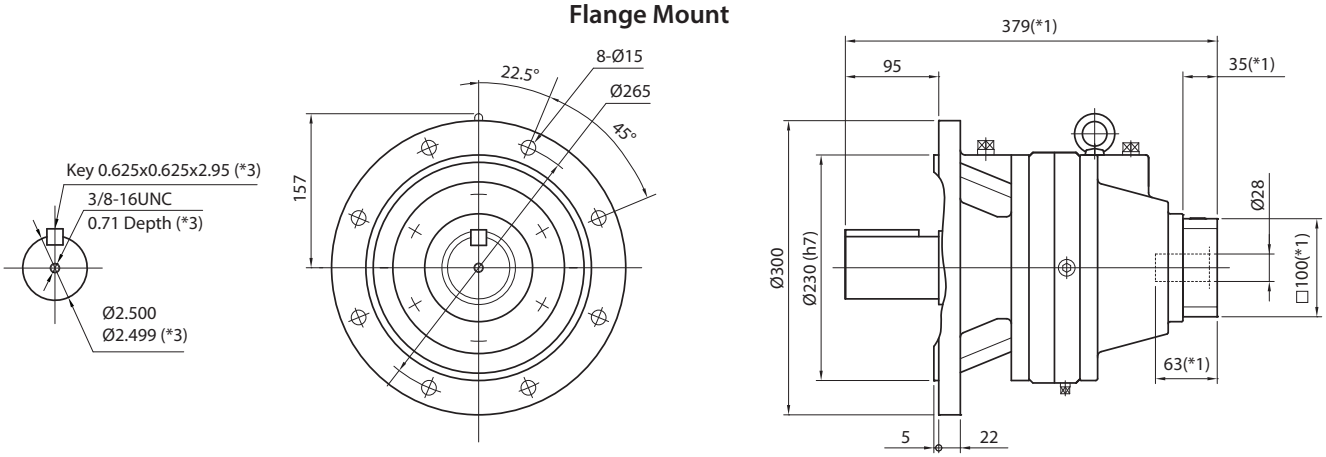

Ring Mount

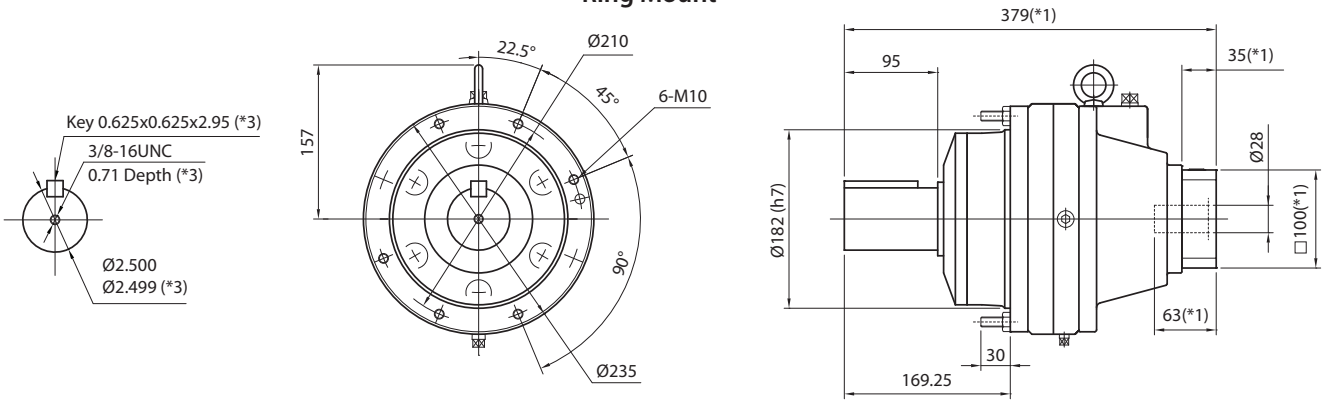

Hollow Mount

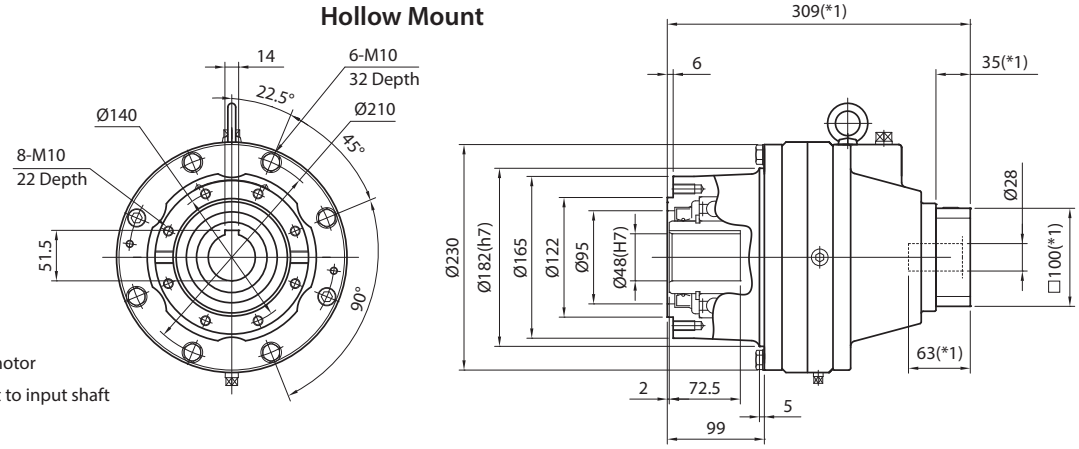

*1) Length will vary depending on motor

*2) Bushing will be inserted to adapt to input shaft

*3) Unit is in inches of measurement

ERH D Specifications

Frame Size	**D**								
Stage	**Single Stage**								
Ratio	Units	Note	11	17	29	35	47	59	71
Nominal Output Torque	[Nm]	*1	383	495	533	570	633	609	582
Maximum Acceleration Torque	[Nm]	*2	575	743	800	855	950	914	873
Emergency Stop Torque	[Nm]	*3	957	1,240	1,330	1,420	1,580	1,520	1,460
Nominal Output Torque (Precision)	[Nm]	*1	287	349	376	402	447	430	411
Maximum Acceleration Torque (Precision)	[Nm]	*2	431	524	564	603	671	645	617
Emergency Stop Torque (Precision)	[Nm]	*3	718	872	940	1,010	1,120	1,070	1,030
Nominal Input Speed	[rpm]	*4	3000						
Maximum Input Speed	[rpm]	*5	4000						
No Load Running Torque	[Nm]	*6	1.9						
Permitted Radial Load	[N]	*7	11960	13740	15920	16630	18060	20240	20950
Permitted Axial Load	[N]	*8	5980	6870	7960	8310	9030	10120	10470
Maximum Radial Load	[N]	*9	22420						
Maximum Axial Load	[N]	*10	11210						
Moment of Inertia (≤Ø 28)	[kgcm2]	--	5.08	7.21	7.88	7.71	7.71	7.71	7.54
Moment of Inertia (≤ Ø 38)	[kgcm2]	--	7.75	11.00	12.01	11.75	11.75	11.75	11.50
Efficiency	[%]	*11	90						
Torsional Rigidity	[Nm/arcmin]	*12	17.8	23.0	25.2	27.4	27.4	27.4	27.4
Backlash (Standard)	[Arc-min]	--	≤ 60						
Backlash (Precision)	[Arc-min]	--	≤ 6						
Noise Level	[dB]	*13	≤ 78						
Protection Class	--	*14	IP41 (IP65)						
Ambient Temperature	[°C]	--	0-40						
Permitted Housing Temperature	[°C]	--	90						
Lubrication	--	--	Oil						
Weight	[kg]	*15	68						

*1) At nominal input speed, service life is 20,000 hours
*2) The maximum torque when starting or stopping operation
*3) The maximum torque allowed under a stress situation (Permitted 1,000 times during service life)
*4) The average input speed
*5) The maximum intermittent input speed
*6) Torque at no load applied to the input shaft at nominal input speed
*7) At this load and nominal input speed, service life will be 20,000 hours. (The radial load applied to the output side shaft center)
*8) At this load and nominal input speed, service life will be 20,000 hours. (The axial load applied to the output side bearing)
*9) The maximum radial load that the gearbox can accept
*10) The maximum axial load that the gearbox can accept
*11) The efficiency at the nominal output torque rating
*12) This does not include lost motion
*13) Contact Nidec Drive Technology for the testing conditions and environment
*14) IP65 (wash-down) is available as an option. Contact Nidec Drive Technology for more details
*15) The weight may vary slightly between models

ERH D Dimensions (Input Bore ≤Ø 38)

Base Mount

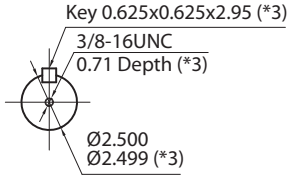

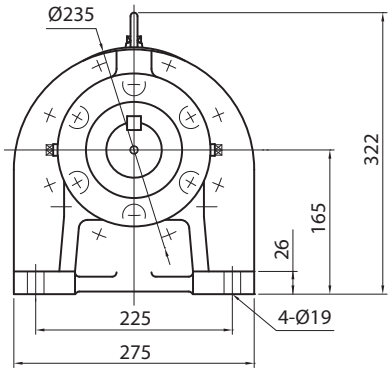

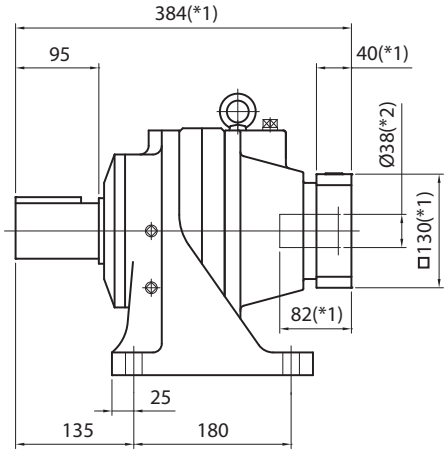

Flange Mount

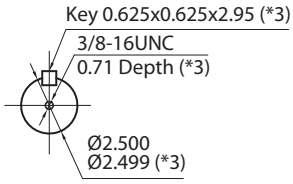

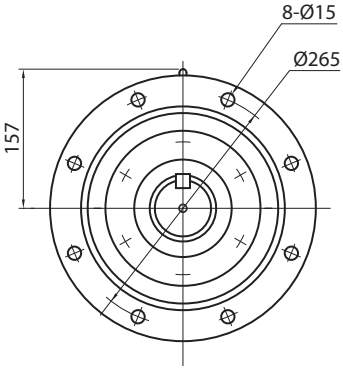

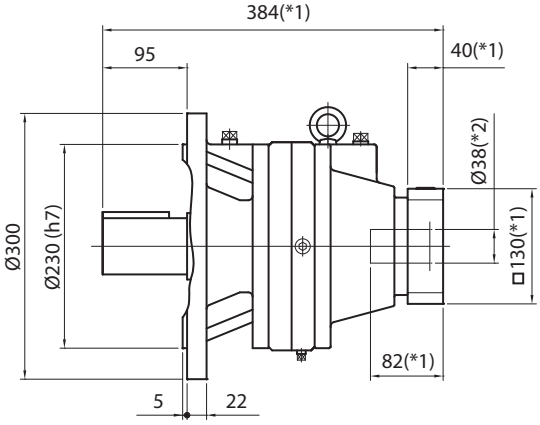

Ring Mount

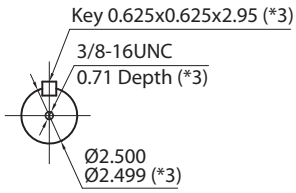

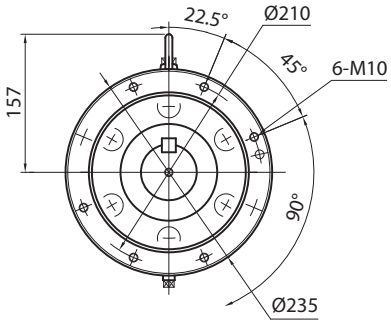

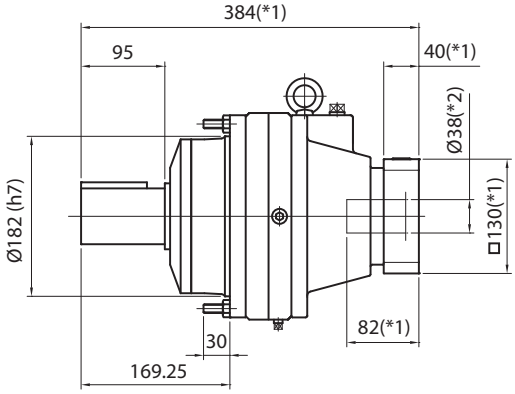

Hollow Mount

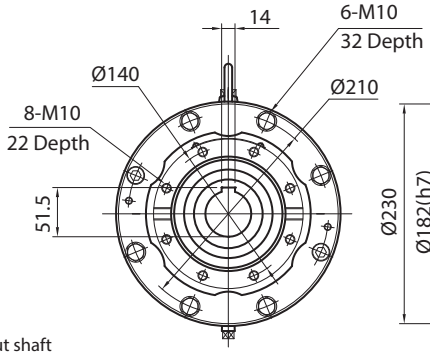

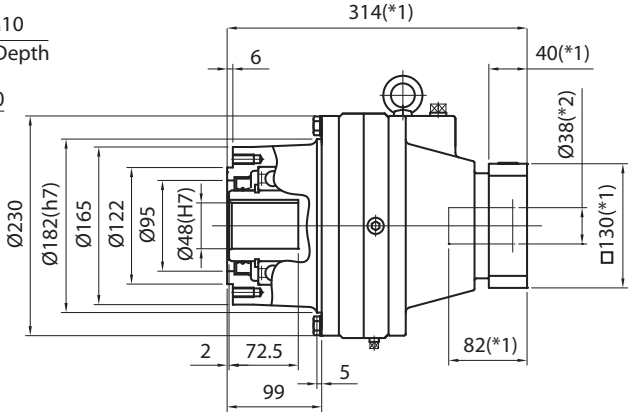

*1) Length will vary depending on motor

*2) Bushing will be inserted to adapt to input shaft

*3) Unit is in inches of measurement

Technical Information

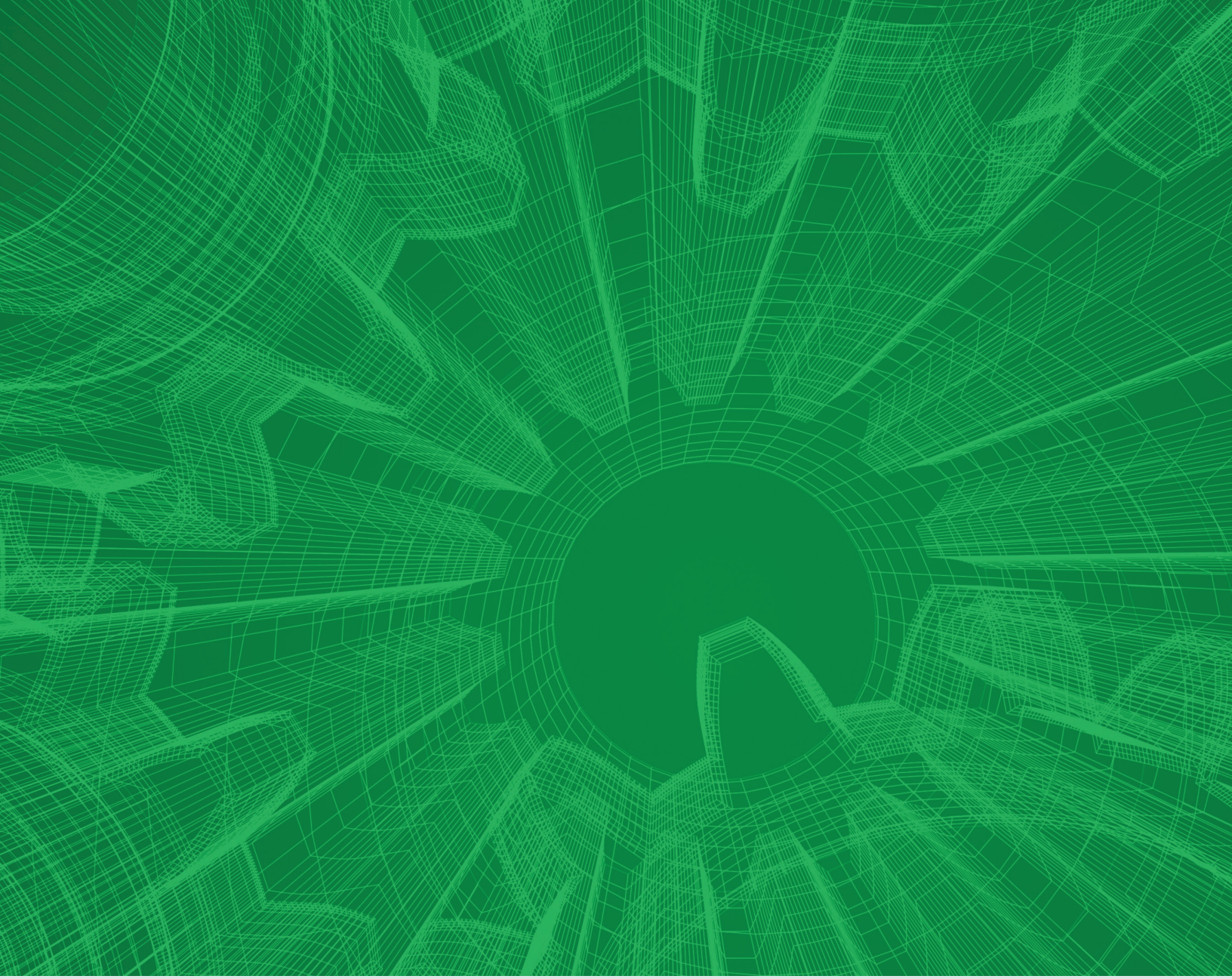

Options & Modifications

Build Your Ideal Gearbox

Nidec Drive Technology Corporation realizes that even with our vast range of products, you may not find exactly what you need for your application. We are highly capable of supplying custom solutions for OEMs, which include completely customized gearboxes or gear sets, modified standard designs and integrated product assemblies to meet unique application requirements.

We work closely with our OEM customers during early phases of development to create special designs that can overcome the harshest environments, tightest space constraints and most demanding positioning requirements. Whether your application requires weight relief, cost-down considerations, special coatings or materials of construction, Nidec Drive Technology can develop a product to meet your target.

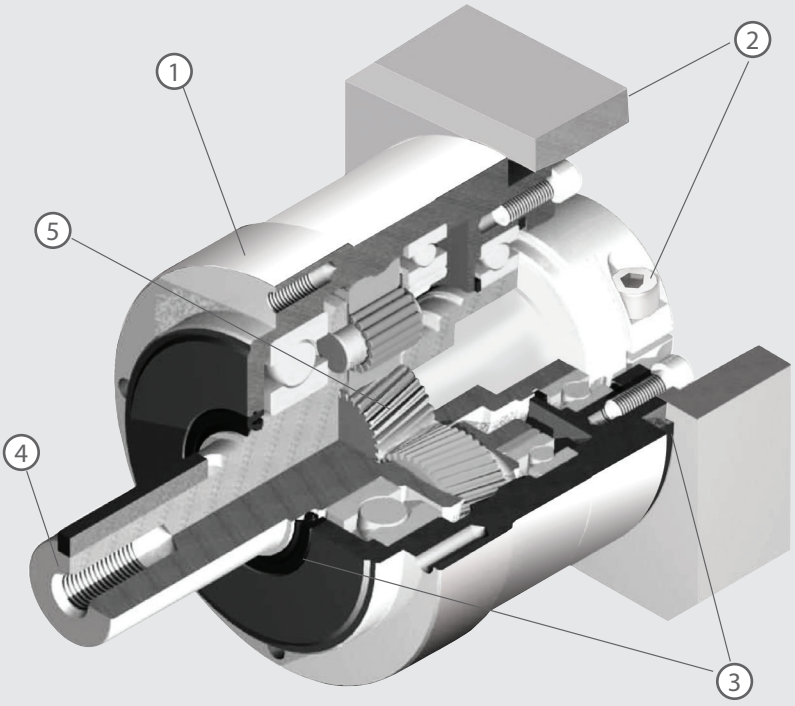

1. Housing Coatings and Surface Finishes: White Epoxy, Steel-It, Nickel Plating, Black Oxide
2. Motor Mounting: Custom motor adapters, integrated assemblies
3. Ingress Protection: IP65 Protection available using special input seals, output seals and sealants
4. Output Shaft Materials of Construction & Modifications: 300 Series Stainless, 400 Series Stainless, 17-4PH Stainless, Nickel Plating, Special Width, Special Length
5. Lubrication: Food Grade, Low Temperature, High temperature, Vacuum-rated

Note: The following options and modifications may require minimum order quantities.
Contact Nidec Drive Technology for additional details.

Standard Planetary Washdown and Food Grade Options

Food, beverage, pharmaceutical and cosmetics equipment builders compete on their ability to deliver more innovative processing and packaging, with higher throughput and less downtime. Strict hygiene regulations require equipment to be cleaned often with water, steam and harsh chemicals that can quickly destroy ordinary machine components. These operating conditions pose challenges for gearbox manufacturers and Nidec Drive Technology is up to the task.

Nidec Drive Technology offers standard washdown and food grade options for our planetary products in a select group of configurations.

These options include stainless steel output shaft and fasteners, IP65 ingress protection, white epoxy, Steel-it paint or nickel plating and food grade lubrication. These options are outlined below. Our industry experts can help you determine the right protection for your application and environment.

Series	VRL			
Frame Size	050	070	090	120
1-Stage Ratios	3, 4, 5, 7, 10			
2-Stage Ratios	15, 16, 20, 25, 28, 30, 35, 40, 50, 70, 100			

* Nickel plating not available as standard option for VRL-050

Series	VRB			
Frame Size	042	060	090	115
1-Stage Ratios	3, 4, 5, 7, 10			
2-Stage Ratios	15, 16, 20, 25, 28, 30, 35, 40, 50, 70, 100			

* Nickel plating not available as standard option for VRB-042

Series	VRS		
Frame Size	060	075	100
1-Stage Ratios	3, 4, 5, 7, 10		
2-Stage Ratios	15, 16, 20, 25, 28, 30, 35, 40, 50, 70, 100		

* Nickel plating not available as standard option for VRS

Series	VRT		
Frame Size	064	090	110
1-Stage Ratios	4, 5, 7, 10		
2-Stage Ratios	16, 20, 25, 28, 35, 40, 50, 70, 100		

* Nickel plating not available as standard option for VRT

Model Code

VRB	—	090C	—	7	—	K	3	—	19HB16	—	XV
Series		Frame Size		Ratio		Output shaft style	Backlash		Adapter code		Washdown and Food Grade Options

Order Code		Description of Features
C		IP 65 Protection Only
W		Standard Grease. Food Grade White Epoxy
S		Standard Grease, Steel-It™ Paint
J		Standard Grease, Nickel Plated Output Housing
F		Food Grade Grease, Standard Paint
X		Food Grade Grease, Food Grade White Epoxy
G		Food Grade Grease, Steel-It™ Paint
K		Food Grade Grease, Nickel Plated Output Housing
	V	Stainless Steel Shaft & Fasteners, IP65 Protection

* First letter represents grease and coating combination. Second letter represents shaft material & ingress protection. Select "C" for IP65 protection only.

Inspection and Preparations

A. Upon delivery of the gearbox, confirm that you received the exact model that was specified on your purchase order.

B. Inspect for shipping damage. Notify the shipping agent immediately if any damage is discovered.

C. Remove the protective covering from the output shaft.

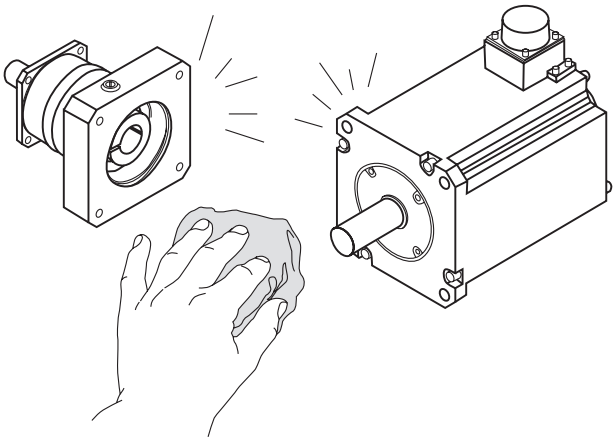

D. Clean and de-grease the motor mounting surface and shaft, as well as the gearbox mounting surface, input hub bore, and shaft bushing (if included). This cleaning is very important for the shaft and bushing, to prevent slip during motion.

Motor Mounting

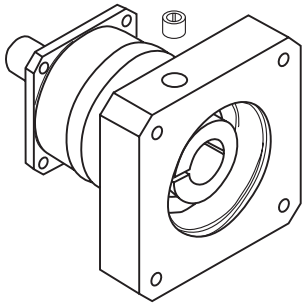

A. Remove the access hole plug, allowing access to the motor shaft clamp.

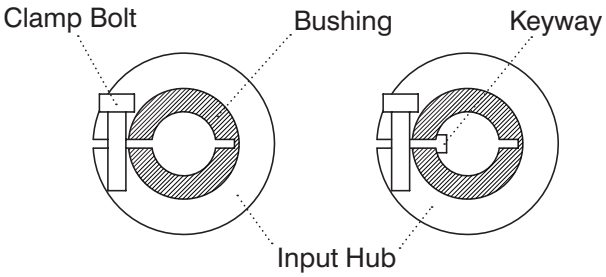

B. Carefully align the shaft bushing (if included) so that the opening in the bushing aligns with the opening in the input hub. It is also recommended that the motor shaft keyway (if present) aligns with the opening in the input hub clamp.

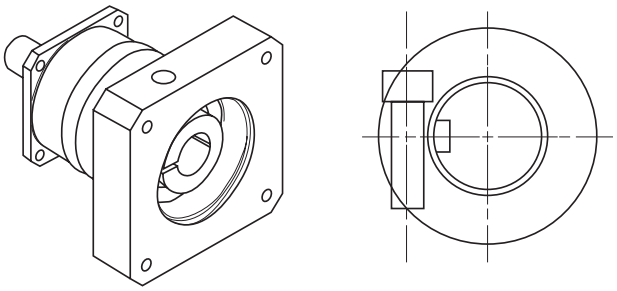

C. Rotate the gearbox input hub so that the clamp bolt is aligned with the access hole. Loosen the clamp bolt.

D. Remove the motor key (if supplied), as it is not required for proper installation and operation.

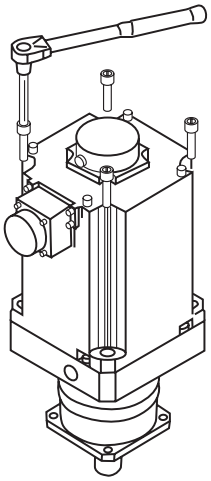

E. Slowly slide the motor into the gearbox, so that the motor shaft enters the gearbox input hub with motor shaft keyway (if present) aligned with gearbox input shaft clamp opening. Install the four motor flange bolts in a cross-wise pattern, to ensure proper alignment of motor to gearbox. Tighten the bolts to the proper torque using a torque wrench (see Table A).

Table A

Motor Installation Bolt Size	Tightening Torque	
	(Nm)	(in lbs)
M3	1.1	9.7
M4	2.5	22.1
M5	5.1	45.1
M6	8.7	77
M8	21	186
M10	42	372
M12	72	637

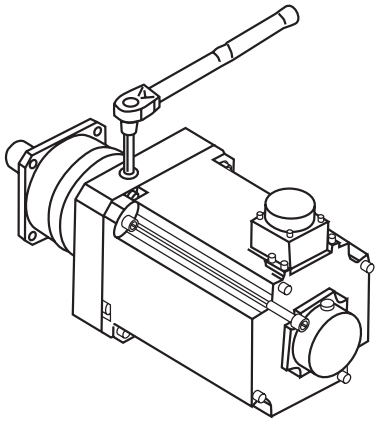

F. Tighten the gearbox input shaft clamp bolt to the proper torque using a torque wrench (see Table B).

Table B

Clamp Bolt Size	Tightening Torque	
	(Nm)	(in lbs)
M3	1.9	16.8
M4	4.3	38.1
M5	8.7	77
M6	15	133
M8	36	318
M10	71	628
M12	125	1106

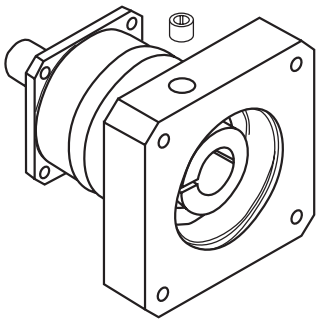

G. Re-install the access hole plug into the motor adapter plate. Assembly is complete.

Safety Precautions

A. Avoid use in wet or corrosive areas, unless the gearbox is specified for these environments.

B. Ambient temperature in the area of the gearbox must be in the range of 0° -40°C, unless the gearbox is built to withstand a different temperature range.

C. The gearbox (with motor) must be firmly attached to a vibration-free frame or fixture.

D. The gearbox has been lubricated and can be operated immediately.

E. At initial operation, check the direction of shaft rotation, then apply the load gradually.

F. Avoid excessive loads.

G. Ensure that the motor speed does not exceed the maximum RPM specified for the gearbox.

H. Watch for the following problems and discontinue motion immediately:

   a. Sharp increase in temperature
   b. Abnormal noise
   c. Unstable output speed

I. The gearbox is not designed to be disassembled.

J. The gearbox is lubricated for its lifetime with appropriate grease. No re-lubrication is required.

IP 65 Versions

If you have received an IP65 version of the gearbox, be sure to seal between the gearbox and motor interface with a sealant to ensure an IP65 rating of the gearbox / motor assembly. Also apply sealant to the access hole plug during step "G". Please contact Nidec Drive Technology with any questions.

Motor Mounting Codes

Our motor mounting codes can be configured automatically using our online selection tool. These tables supply the details behind these codes. The tables start with Input Bore measurement and the Part # Code, which are indicated at the end of every model code. For each Part # Code, the Pilot**,** BCD, Tapped Hole, and Pilot Depth, are explained.

Please note that even though the Part# Code may have the same letters (i.e. DC, FB, HA, etc), the Pilot and BCD dimensions may not be the same if a different input bore diameter. Locate the table by input bore diameter first, and then find the appropriate adapter Part# Code to check the dimensions. If you have any questions, contact Nidec Drive Technology for support.

Input Bore (mm)	Part# Code	Pilot (mm)	BCD (mm)	Tapped Hole	Pilot Depth (mm)
65	MA	114.3	200	M12	8
65	MB	200	235	M12	8
65	MC	180	215	M12	8
65	MD	180	265	M12	8
65	NA	230	265	M12	8
65	NB	230	265	M12	18
65	NC	230	290	M12	8
65	ND	230	265	M20	18
65	PA	250	300	M16	8
65	PB	250	320	M16	18
65	QA	300	350	M16	8
65	QB	280	325	M16	8

Input Bore (mm)	Part# Code	Pilot (mm)	BCD (mm)	Tapped Hole	Pilot Depth (mm)
48	KA	114.3	200	M12	8
48	KB	110	130	8.8	8
48	KC	130	215	M12	8
48	LA	180	215	M12	8
48	MA	180	265	M12	8
48	MB	200	235	M12	8
48	NA	230	265	M12	8
48	PA	250	300	M16	8

Input Bore (mm)	Part# Code	Pilot (mm)	BCD (mm)	Tapped Hole	Pilot Depth (mm)
38	HA	110	130	8.8	8
38	HB	110	145	M8	8
38	HE	110	130	M8	8
38	JA	130	165	M10	8
38	KA	114.3	200	M12	8
38	KB	130	215	M10	8
38	KC	130	215	M12	8
38	KD	95	200	M10	18
38	KE	114.3	200	M12	18
38	LA	180	215	M12	8
38	LB	180	215	M12	18
38	MA	180	265	M12	8
38	MB	200	235	M12	8
38	MC	215.9	184.15	13.7	5.5
38	MD	200	250	M8	18
38	NA	230	265	M12	8

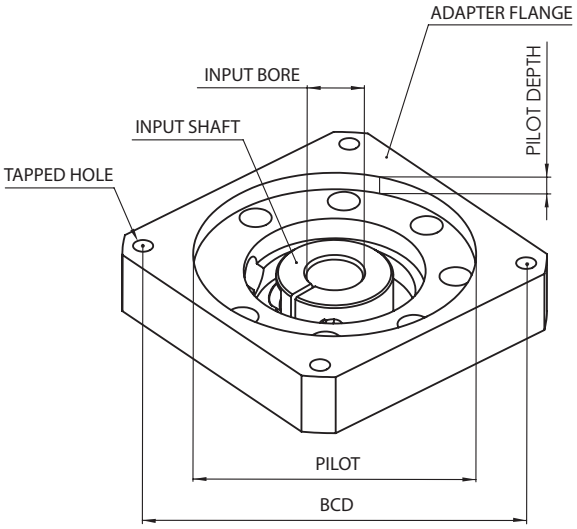

Motor Mounting Codes

Input Bore (mm)	Part# Code	Pilot (mm)	BCD (mm)	Tapped Hole	Pilot Depth (mm)
28	FA	80	100	M6	8
28	FB	95	115	M6	8
28	FC	95	115	M8	8
28	FD	95	115	M6	8
28	FE	95	115	M8	6
28	GA	55.563	125.73	M6	8
28	GB	63.5	127	M6	8
28	GC	95	130	M8	8
28	GD	110	130	M8	8
28	GE	110	130	M10	8
28	GF	110	130	8.8	8
28	GG	110	135	M8	8
28	GH	95	135	M8	8
28	HA	110	145	M8	8
28	HB	110	145	M8	18
28	HC	110	145	10.5	8
28	HD	114.3	149.23	10.5	8
28	HE	95	145	M8	18
28	HF	110	145	M8	8
28	JA	110	165	M8	8
28	JB	110	165	M10	8
28	JC	130	165	M10	8
28	JD	130	174	M10	28
28	JE	130	165	M10	18
28	JF	114.3	160	M10	8
28	KA	114.3	200	M12	8
28	KB	130	215	M10	8
28	KD	114.3	200	M12	18
28	KE	150	185	M10	8
28	LA	180	215	M12	8
28	LB	180	220	M12	18
28	MA	200	235	M12	8
28	MB	200	250	M8	18

Input Bore (mm)	Part# Code	Pilot (mm)	BCD (mm)	Tapped Hole	Pilot Depth (mm)
19	DA	60	90	M5	6
19	DB	70	90	M5	6
19	DC	70	90	M6	6
19	DD	70	90	M6	16
19	DE	70	90	M5	11
19	EA	73.025	98.43	M5	11
19	EB	80	100	M6	6
19	EC	80	100	M6	16
19	ED	60	98.99	M6	6
19	FA	95	115	M8	6
19	FB	95	115	M8	16
19	GA	55.563	125.73	M6	11
19	GB	95	130	M8	6
19	GC	110	130	M8	11
19	GD	110	130	8.8	6
19	GE	95	130	M8	16
19	GF	100	125	M8	16
19	GH	95	135	M8	11
19	HA	110	145	M8	6
19	HB	110	145	M8	21
19	HC	110	145	10.5	11
19	HD	114.3	149.23	M8	11
19	HE	114.3	149.23	10.5	11
19	JA	130	165	M10	16
19	JB	115	165	M8	21

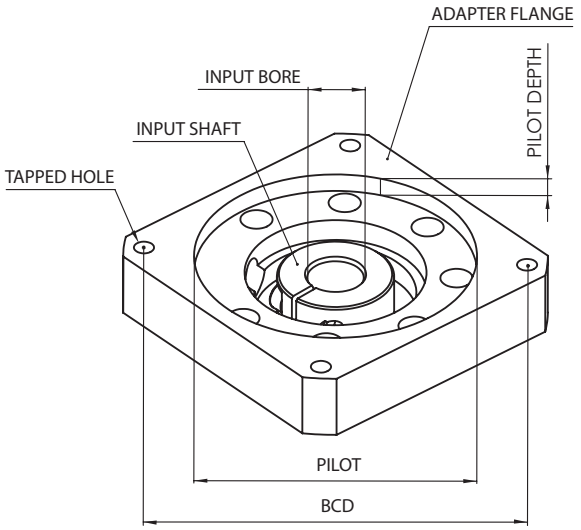

Motor Mounting Codes

Our motor mounting codes can be configured automatically using our online selection tool. These tables supply the details behind these codes. The tables start with Input Bore measurement and the Part # Code, which are indicated at the end of every model code. For each Part # Code, the Pilot**,** BCD, Tapped Hole, and Pilot Depth, are explained.

Please note that even though the Part# Code may have the same letters (i.e. DC, FB, HA, etc), the Pilot and BCD dimensions may not be the same if a different input bore diameter. Locate the table by input bore diameter first, and then find the appropriate adapter Part# Code to check the dimensions. If you have any questions, contact Nidec Drive Technology for support.

Input Bore (mm)	Part# Code	Pilot (mm)	BCD (mm)	Tapped Hole	Pilot Depth (mm)
14	BA	38.1	66.68	M4	5
14	BB	38.1	66.68	M5	5
14	BC	38.1	66.68	M5	10
14	BD	40	63	M4	5
14	BE	40	63	M5	5
14	BF	40	65	M5	5
14	BG	40	70	M4	5
14	BH	50	60	M4	10
14	BJ	50	70	M4	5
14	BK	50	70	M5	5
14	BL	50	70	M5	15
14	BM	50	70	M5	10
14	BN	50	70	M4	10
14	BP	36	70.71	M4	5
14	CA	60	75	M5	5
14	CB	60	75	M6	10
14	CC	60	80	M4	5
14	DA	50	95	M6	5
14	DB	60	85	M5	5
14	DC	60	90	M5	5
14	DD	70	85	6.5	5
14	DE	70	90	M5	10
14	DF	70	90	M6	5

Input Bore (mm)	Part# Code	Pilot (mm)	BCD (mm)	Tapped Hole	Pilot Depth (mm)
14	DG	70	90	M6	15
14	DH	70	95	M6	5
14	DJ	60	95	M5	5
14	DK	36.8	82.024	M6	15
14	DL	62	91.924	M5	10
14	EA	50	100	M6	5
14	EB	73.025	98.43	M5	5
14	EC	80	100	M6	5
14	ED	80	100	M6	15
14	EE	73.025	98.43	M6	15
14	EF	50	98.43	M5	5
14	EG	60	98.995	M5	5
14	EH	80	105	M6	15
14	EJ	60	98.995	M6	10
14	EK	73.025	98.43	M6	5
14	EL	73	94	M6	5
14	EM	83	104	M8	10
14	FA	60	115	M6	5
14	FB	95	115	M8	15
14	GA	80	139.7	M6	5
14	GB	80	130	M5	20
14	GC	94	120	M8	10
14	JA	115	165	M8	10

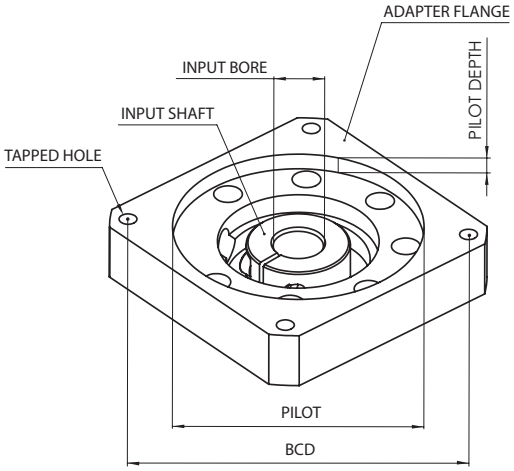

Motor Mounting Codes

Input Bore (mm)	Part# Code	Pilot (mm)	BCD (mm)	Tapped Hole	Pilot Depth (mm)
8	AA	20.02	46.69	M3	5
8	AB	22	43.82	4.7	10
8	AC	22	48	M3	5
8	AD	22.22	50.8	M3	5
8	AE	25.4	38.89	4	10
8	AF	30	45	M3	5
8	AG	30	46	M4	5
8	AH	30	46	M4	10
8	AJ	30	46	3.5	10
8	AK	34	48	M3	10
8	AL	30	48	M3	5
8	AM	22	43.82	3.5	5
8	AN	40	50	M4	5
8	AQ	37.6	48	M3	5
8	BA	38.1	66.68	M4	5
8	BB	38.1	66.68	M5	5
8	BC	50	60	M4	10
8	BD	50	70	M4	5
8	BE	50	70	M5	5
8	BF	50	70	M5	10
8	BG	36	70.71	M4	5
8	BH	54	70	M4	5
8	BJ	50	58	M3	5
8	CA	50	80	M4	10

Input Bore (mm)	Part# Code	Pilot (mm)	BCD (mm)	Tapped Hole	Pilot Depth (mm)
S8	ZA	20.02	46.69	M3	5
S8	ZB	22	43.82	4.7	10
S8	ZC	22	48	M3	5
S8	ZD	22.22	50.8	M3	5
S8	ZE	25.4	38.89	4	10
S8	ZF	30	45	M3	5
S8	ZG	30	46	M4	5
S8	ZH	30	46	M4	10
S8	ZJ	30	46	3.5	10
S8	ZK	34	48	M3	10
S8	ZL	30	48	M3	5
S8	ZM	22	43.82	3.5	5
S8	ZN	40	50	M4	5
S8	ZQ	37.6	48	M3	5
S8	BA	38.1	66.68	M4	5
S8	BB	38.1	66.68	M5	5
S8	BC	50	60	M4	10
S8	BD	50	70	M4	5
S8	BE	50	70	M5	5
S8	BF	50	70	M5	10
S8	BG	36	70.71	M4	5
S8	BH	54	70	M4	5
S8	BJ	50	58	M3	5

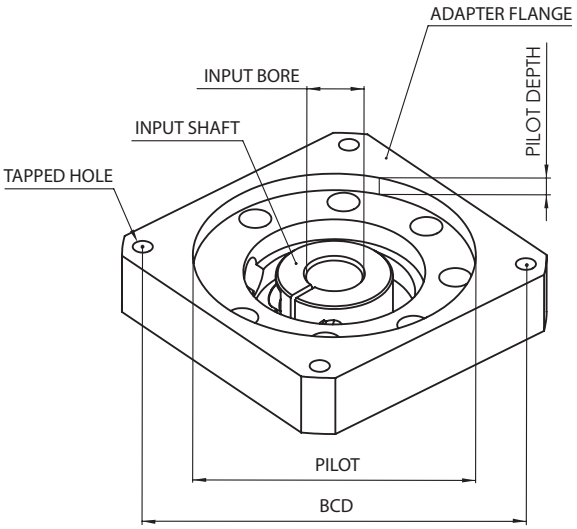

Gearbox Selection Procedure

Determine Type of Move and Profile Requirements

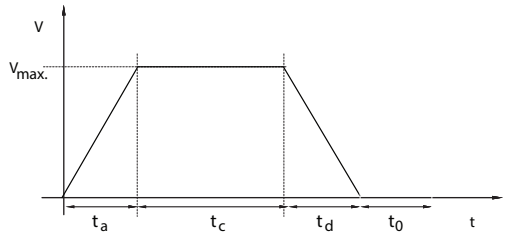

Picture 3.2.2.1: Trapezoidal Motion Profile

Trapezoidal Move

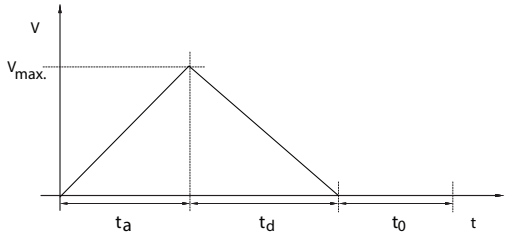

Picture 3.2.1.1: Triangular Motion Profile

Triangular Move

Select a Preliminary Frame Size & Series

Calculate / Compare
Max Operating Radial Load & Max Operating Axial Load

Max Operating Radial Load (N): $Fr_{MAX\text{-}O}$ = Max. of $Fr_{O1}, Fr_{O2}, \cdots Fr_{On}$
Max Radial Load (N): $Fr_{MAX\text{-}P}$

Max Operating Axial Load (N): $Fa_{MAX\text{-}O}$ = Max. of $Fa_{O1}, Fa_{O2}, \cdots Fr_{On}$
Max Axial Load (N): $Fa_{MAX\text{-}P}$

$[Fr_{MAX\text{-}P} \geqq Fr_{MAX\text{-}O}]$ — ***FALSE***

$[Fa_{MAX\text{-}P} \geqq Fa_{MAX\text{-}O}]$ — ***FALSE***

TRUE

Calculate: Max Operating Output Torque & Max Operating Output Speed

Max Operating Output Speed (rpm): $no_{MAX\text{-}O}$ = Max. of $no_{O1}, no_{O2}, \cdots no_{On}$

Max Operating Output Torque (rpm): $To_{MAX\text{-}O}$ = Max. of $To_{O1}, To_{O2}, \cdots To_{On}$

Select: Preliminary Reduction Ratio (R)
Calculate: Max Operating Input Speed (niMAX-O)

$ni_{MAX\text{-}O} = no_{MAX\text{-}O} \times R$

Compare Input Speed — ***FALSE***

$[ni_{MAX\text{-}P} \geqq ni_{MAX\text{-}O}]$

Compare the Max Input Speed ($ni_{MAX\text{-}P}$) to the Max Operating Input Speed: ($ni_{MAX\text{-}O}$)

TRUE

Compare Output Torque — ***FALSE***

$[To_{MAX\text{-}P} \geqq To_{MAX\text{-}O}] \times f_0$

Compare the Max Acceleration Torque ($To_{MAX\text{-}P}$) to the Max Operating Output Torque ($To_{MAX\text{-}O}$)

Apply Cycle Factor if needed

Cycle Factor

f_0	-1k cycles/hour	1-3k cycles/hour	3-5k cycles/hour	5-7k cycles/hour	7k-cycles/hour
< 1 hours/day	1.0	1.2	1.3	1.3	1.4
< 8 hours/day	1.3	1.5	1.6	1.9	1.9
< 16 hours/day	1.4	1.6	1.9	2.4	2.6
< 24 hours/day	1.5	1.9	2.4	2.9	3.1

Look up Data in Catalog: Green text
Calculate: Red text

Calculate: Average Operating Radial Load & Average Operating Axial Load

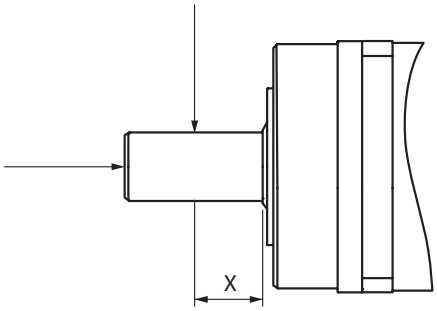

Average Operating Radial Load (N):

$$Fr_{AVG-O} = \sqrt[3]{\frac{no_{O1} \cdot t_1 \cdot |Fr_{O1}|^3 + no_{O2} \cdot t_2 \cdot |Fr_{O2}|^3 + \cdots + no_{On} \cdot t_n \cdot |Fr_{On}|^3}{no_{O1} \cdot t_1 + no_{O2} \cdot t_2 + \cdots + no_{On} \cdot t_n}}$$

Average Operating Axial Load (N):

$$Fa_{AVG-O} = \sqrt[3]{\frac{no_{O1} \cdot t_1 \cdot |Ft_{O1}|^3 + no_{O2} \cdot t_2 \cdot |Ft_{O2}|^3 + \cdots + no_{On} \cdot t_n \cdot |Ft_{On}|^3}{no_{O1} \cdot t_1 + no_{O2} \cdot t_2 + \cdots + no_{On} \cdot t_n}}$$

Calculate: Average Operating Output Torque & Average Operating Output Speed

Average Operating Output Torque (Nm):

$$To_{AVG-O} = \sqrt[10/3]{\frac{no_O \cdot to_1 \cdot |To_{O_1}|^{10/3} + no_{2O} \cdot to_2 \cdot |To_{O2}|^{10/3} + \cdots + no_{On} \cdot to_n \cdot |To_{On}|^{10/3}}{no_{O1} \cdot to_1 + no_{O2} \cdot to_2 \cdots no_{On} \cdot to_n}}$$

Average Operating Output Speed (rpm):

$$no_{AVG-O} = \frac{no_{O1} \cdot to_1 + no_{2O} \cdot to_2 \cdots no_{On} \cdot to_n}{to_1 + to_2 + \cdots + to_n}$$

Calculate: Life

Bearing Life (Hours): $Lh = 20{,}000 \bullet \left(\frac{To_{AVG-P}}{To_{AVG-O}}\right)^P \bullet \left(\frac{ni_{AVG-P}}{no_{AVG-O}}\right)$

To_{AVG-P}: *Nominal Output Torque*

To_{AVG-O}: *Average Operating Output Torque*

ni_{AVG-P}: *Nominal Input Speed*

no_{AVG-O}: *Average Operating Output Speed*

There are 3 Life calculations that should be taken into account:

1. *Life of Needle Bearing*
2. *Life Due to Radial Load*
3. *Life Due to Thrust Load*

Increase One Frame Size

Lh ≥ Required Life

FALSE

TRUE

Ensure Proper Fit between Gearbox and Motor

Gearbox Selection Complete

Look up Data in Catalog: Green text
Calculate: Red text
Contact Nidec Drive Technology for questions at (800) 842-1479

Online Planetary Sizing and Selection Tool

Nidec Drive Technology Corporation's online Selection Tool makes it simple to configure our planetary product. The online Selection Tool has an extensive list of Servo Motor Specifications, Requirements and Application Specifications. See the Selection Tool example screens below to guide, support and help you with your application needs.

Selection Tool Screen Example 1

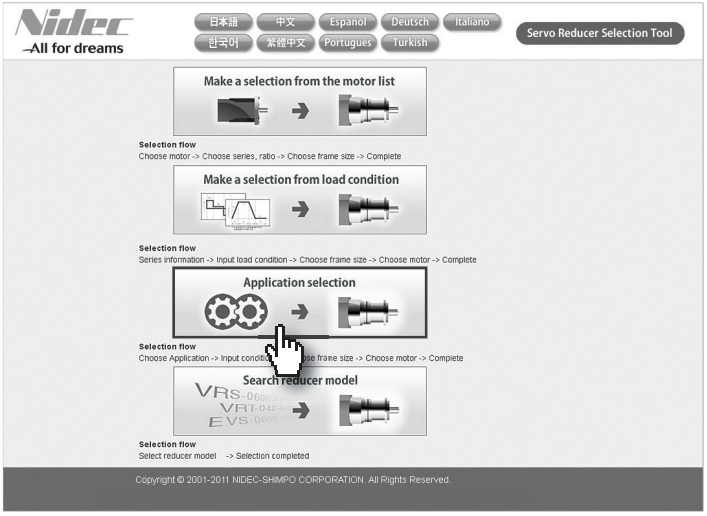

- Selection based on the Servo Motor Specifications
- Selection based on the Servo Motor Movement profile requirements
- Selection based on the Application Specifications includes all the above

Selection Tool Screen Example 2

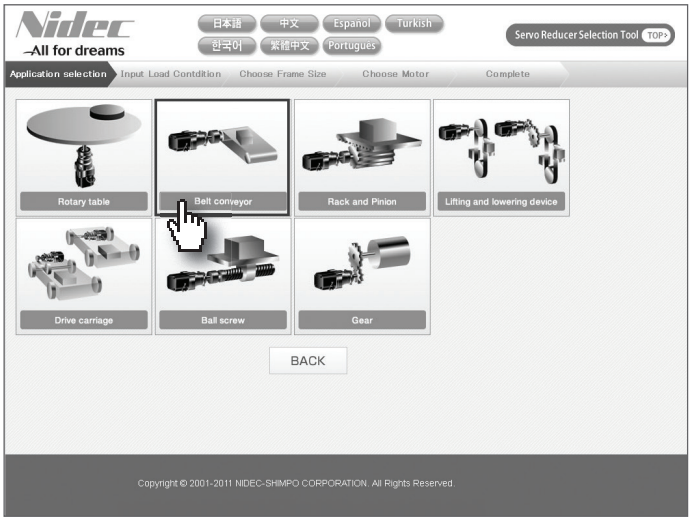

- Select a application template based on your criteria

Selection Tool Screen Example 3

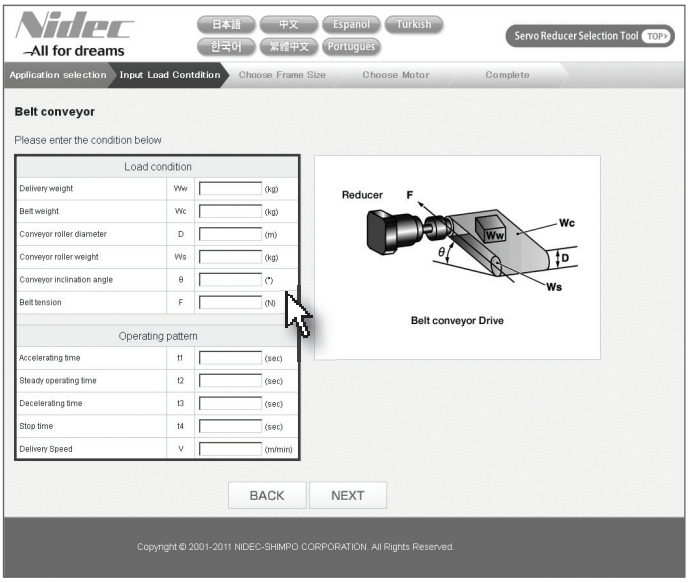

- Fill in all the information for your application

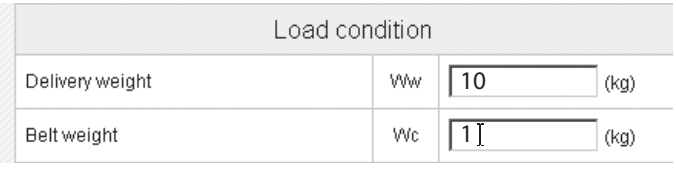

- Including the velocity, forces, mass, and move profile

Selection Tool Screen Example 4

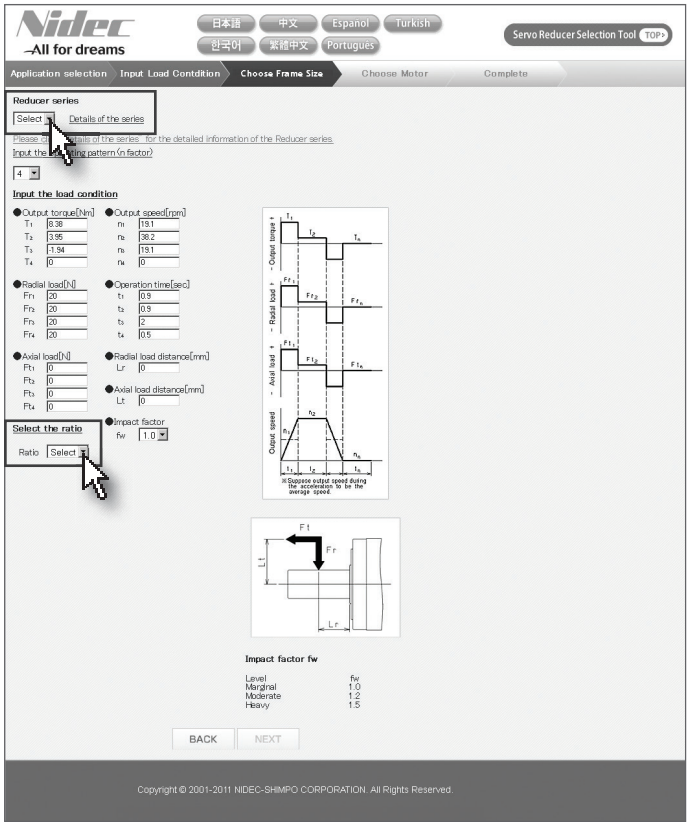

- Select a Nidec Drive Technology planetary gearbox series
- Select a Ratio that would put you near the rpm range for your application

Selection Tool Screen Example 5

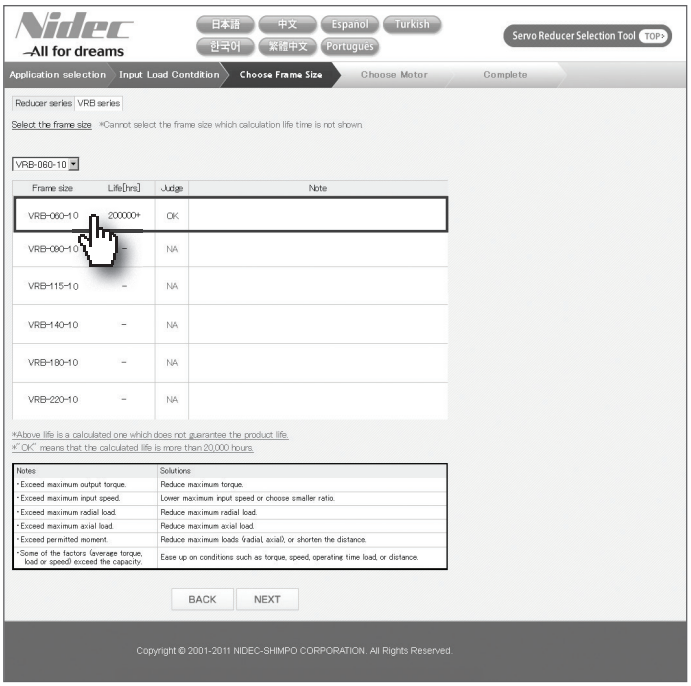

- The proper Nidec Drive Technology reducer frame size has been selected based on your application's criteria

Selection Tool Screen Example 6

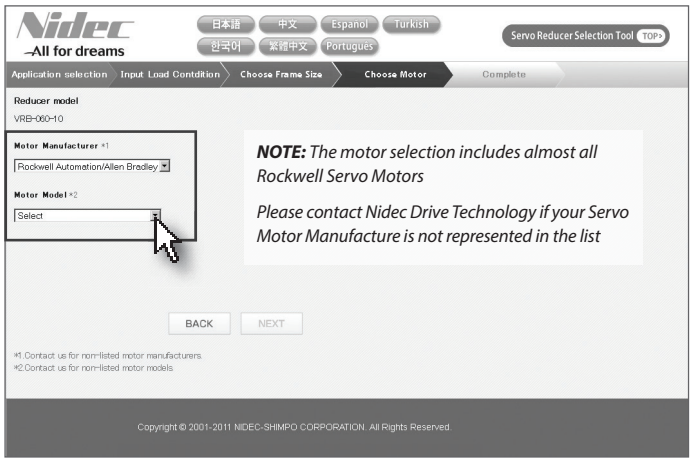

- Select the Motor Manufacturer for your application from the list
- Select the appropriate motor via the "Motor Model drop down box"
- The manufacture Motor Model list includes new and former servo motors
- The sizing program does not select the servo motor drive

Selection Tool Screen Example 7

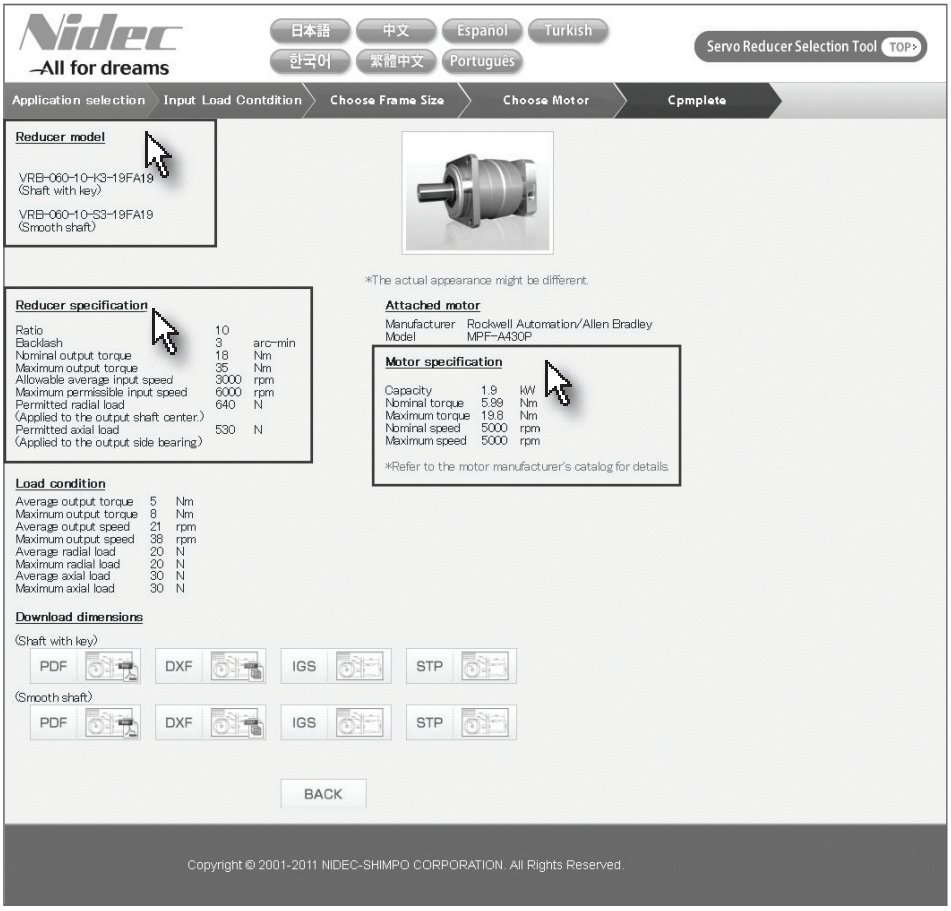

The resulting Load Condition can be helpful for sizing other related machine components

The Load Condition includes:

- Output Torque (Nm) and Output Velocity (rpm) of the Gearmotor

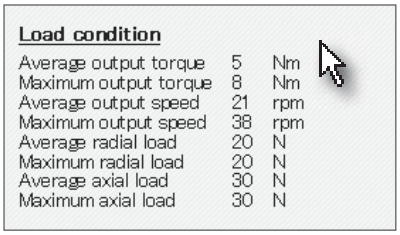

- These drawing formats can be downloaded: PDF, DXF, IGS, STP

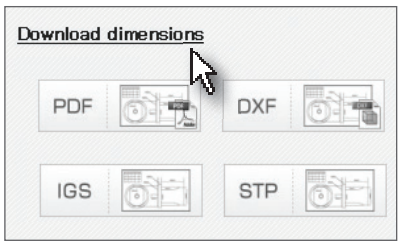

Selection tool https://www.nidec-drivetechnology.co.jp/selection/all/

Commercial Information

Customer Service and Support

Distinction in Service and Support

Nidec Drive Technology Corporation has invested heavily in building a global customer service and application support network that will meet the evolving needs of our customers. By leveraging our global infrastructure, our OEM customers maintain their competitiveness and profitability at home while able to expand into emerging markets abroad without any drop-off of service and support.

Nidec DTC pledges that we will continue to expand our service and support network footprint globally, and continuously strive for perfection as a dependable partner to our customers. In this section you will learn about our service and support capabilities that we will leverage in order to provide you peace of mind.

Online and Phone Support

Resolve your technical issues quickly and accurately, without disrupting your business. When you do business with Nidec Drive Technology, your company and your customers have immediate access to our global network of support centers and resources. Whether you need help designing, installing, and maintaining equipment or diagnosing an operating issue, Nidec DTC will deliver the tools and information that you need in order to insure that your equipment is running to perfection.

Contact your local sales office for immediate support either over the phone or in the field. A list of locations can be found in the back of this catalog. All customer accounts in North America have a dedicated Technical Support Engineer, knowledgeable about your business, on-standby ready to support you and your customers. If you do not know who to contact, please call our 1-800 number in order to get properly directed to the right person for help.

For online support, please visit our website in order to download any drawings, instruction manuals, or technical performance specifications that you require. All catalogs and brochures are easily downloadable on the website. If you prefer to inquire about an issue or for more information, please do not hesitate to submit your request online or email us at the address listed below.

Training Services

Investing our time in you, so together we build better, more competitive product for your customer. As the industrial world becomes increasingly competitive, new technologies are introduced every year requiring manufacturers to constantly rationalize and update existing designs. As a result, successful manufacturers realize the absolute need for product training.

Nidec DTC has a network of engineers that are factory trained and authorized to provide your workforce solid training on our products and basic power transmission concepts. The main objective of our standard program and materials is to better empower your workforce to size and select gearboxes for any motion control applications. We provide this service at no cost to our customers, because we see the value in building a more knowledgeable customer and helping them more quickly react to equipment design revisions when needed.

Other manufacturers are not as forthcoming with sharing information with their customers, an attempt to hide their higher manufacturing costs or to use unreleased performance data as a "product differentiator". Nidec DTC views their customers as long term partners and trains and shares information freely based on that vision.

Training classes can be conducted online, at any of our sales branches or offices, or at key distributor branches when requested. Nidec DTC can also bring the training session to your facility in order to make better use of your time and costs. A thorough hands-on training seminar can be provided at our North American headquarters in Glendale Heights, where customers can get the opportunity to completely assemble and test our products.

The Nidec DTC training program options provide support for any budget. Our training programs improve your employees' skill and knowledge competencies in the areas of power transmission and motion control while addressing any location, time, travel and productivity constraints. Contact your local sales office today in order to get a product refresher on your calendar.

Nidec Drive Technology Hotline:

Toll-free: (800) 842-1479
Email: info@nidec-dtc.com

The Nidec Drive Technology Corporation Warranty

1. **STANDARD WARRANTY**. With the exception of shaft seals, which is a normal wear item, Seller warrants that the products manufactured by the Seller to be free from defects in materials and workmanship under normal use and proper maintenance for:

VR, EV Planetary Products	5 years
ER Cycloidal Products	2 years
EJ Servo Worm Products	5 years
EJM Series	2 years
ST Rotary Index Tables	1 year

a. If within such period any product shall be proved to the Seller's reasonable satisfaction to be defective, such product shall be repaired or replaced at our option. The Seller's obligation and Buyer's exclusive remedy will be limited to such repair or replacement and shall be conditioned upon the Seller receiving written notice of any alleged defect no later than thirty (30) days after its discovery within the warranty period.

b. Shipping terms for any repaired or replaced product will be FOB shipping point unless negotiated otherwise. If necessary, Seller reserves the right to inspect the product claimed to be defective at Buyer's location or place of installation. Travel time and expenses for any Seller service personnel provided to Buyer's premises to affect such repair or replacement will be at the Buyer's expense. Seller reserves the right to satisfy our warranty obligation in full by reimbursing the Buyer for all payments made to Seller and Buyer shall thereupon return the product to Seller.

c. These warranties shall not be effective if the product has been subject to overload, misuse, negligence, or accident, or if the product has been repaired or altered outside of Seller's factory or authorized control in any respect which, in our judgment, adversely affects its condition or operation. Buyer shall establish, to our satisfaction, that the product has at all times, been properly assembled, installed, serviced, maintained, tested, operated and used in accordance with the current maintenance and operating instructions of Seller and has not been altered or modified in any manner without our prior written consent.

d. The Seller's warranty obligation shall not be effective for components or products hereunder where the product 1) is consumed by normal wear and tear, 2) is consumed by an application that was above the rated capacity, and 3) has a normal life that is fundamentally shorter in the length of time than the standard warranty as outlined, hereunder.

e. No extended warranty will be offered on wear items unless otherwise agreed to in writing by Nidec Drive Technology management at the time of the sale.

f. Descriptions or representations of the products provided by the Seller's employees, sales representatives, and distributors, regardless written or verbal, should not be construed as an expressed or implied warranty that would supersede any element of this standard warranty. Expressed or implied warranties are acceptable but only on a case-by-case basis as determined necessary by the Seller. A separate expressed or implied warranty must be provided in writing and confirmed by Nidec DTC management in order to be valid at the time of sale.

g. THE STANDARD WARRANTY AS DESCRIBED HEREIN SHALL BE IN LIEU OF ALL OTHER WARRANTIES EXPRESSED OR IMPLIED RELATED TO THE SELLER'S PRODUCTS, INCLUDING ALL IMPLIED WARRANTIES OF MERCHANTABILITY OR FITNESS, AND SHALL BE IN LIEU OF ANY OBLIGATIONS OR LIABILITY ON THE SELLER'S BEHALF.

STANDARD TERMS AND CONDITIONS

1. **SHIPPING AND PAYMENT TERMS**. Unless otherwise specified, shipping terms are FOB shipping point, and payment terms are net 30 days. All payments are to be made in United States funds.

2. **TAXES AND SECURITY INTEREST**. Unless otherwise specified, the prices stated do not include any taxes which may now or hereafter be applicable to the products or performance of any services by Seller. Buyer agrees to pay or reimburse Seller for any such required taxes and all connected penalties and interests, or in lieu thereof, Buyer shall provide Seller with tax exemption documents acceptable to the taxing authorities involved. Buyer, by acceptance of the goods ordered, represents and warrants that Buyer is solvent and able to pay for the goods in accordance with the terms of sale. As security for payment of the purchase price for the products and all other amounts due from the Buyer under these Terms, Buyer hereby grants Seller a security interest in the products and agrees to execute and permit Seller to file and record all documents which may be requested by Seller in order to create, perfect, evidence and establish the foregoing security interest. If Buyer fails to pay any amount when due, or, prior to payment of all amounts due, removes all or any part of the products from Buyer's premises, we shall exercise any or all of the rights and remedies given to secured parties under the UCC of the State of Illinois, and under similar laws of any other state, if applicable.

3. **RETURN GOODS**. No product will be accepted for return unless authorized with appropriate returned goods number assigned. In all cases, freight charges must be prepaid. Buyer will be responsible for any damages incurred in transit to goods being returned. Title shall pass to Seller upon Seller's acceptance of return goods.

4. **CANCELLATION**. Terms, once accepted and approved by Seller, shall not be canceled or altered by Buyer, and Buyer shall not otherwise cause the work or shipment to be delayed, except with the consent of and upon the terms and conditions approved by Seller in writing. Orders canceled or suspended with our consent are subject to cancellation and/ or other charges as determined by Seller.

5. **DELAY IN DELIVERIES**. In no event shall Seller be liable for nondelivery or delays in delivery of products, or in the performance of any other obligations, arising directly or indirectly from acts of God, acts (including delay or failure to act) of any governmental authority (de jure or de facto), war (declared or undeclared), riot, fires, floods, weather, labor disputes, sabotage, epidemics, factory shutdowns or alterations, embargoes, delays, shortages or inability to procure transportation, labor, manufacturing facilities or materials, failure to obtain timely instructions or information from Buyer, or inability due to causes of any other kind beyond our control. The foregoing provisions shall apply even though such cause may occur after performance of our obligations has been delayed for other causes.

6. **INDEMNIFICATION**. Buyer shall notify Seller promptly in writing and in all events within ten (10) days after its occurrence, of any accident or malfunction involving the products which results in injury to or death of any persons, property damage or economic loss of any kind, and Buyer shall cooperate fully with Seller in investigating and determining the cause of any such accident or malfunction. Buyer further agrees to indemnify and hold Seller harmless from and against all claims and damages imposed upon Seller or incurred arising, directly or indirectly, from Buyer's failure to perform or satisfy any of the Terms described herein.

7. **GENERAL PROVISIONS**. These Terms shall be governed, construed and enforced in accordance with the laws of the State of Illinois, and shall be binding upon and inure to the benefit of any successors, assigns, and legal Distributors of Seller and Buyer. The Terms are not assignable without Seller's prior written approval. A judicial or administrative declaration in any jurisdiction of the invalidity of any one or more of the provisions of the Terms in any jurisdiction, nor shall such declaration have any effect on the validity of interpretation of the Terms outside that jurisdiction.

8. **MINIMUM ORDER CHARGE**. The minimum charge on an order will be $60.00.
9. **BOXING ORDER CHARGE**. No charge is made for standard boxing or crating required by transportation companies for domestic shipments. Cost of special boxing, export boxing, cartage to steamer or transfer expenses will be added to the invoice unless charges are shown to be included in the prices.

Any and all Terms are subject to change prior to Buyer's acceptance of these Terms.

PROPERTY AND PATENT RIGHTS

1. Seller retains for itself any and all property rights, including but not limited to all patent, copyright, and trade secret rights, to any software materials and to all designs, engineering details, documentation, and other data pertaining to any product designed in connection herewith and to all right of discovery, invention or patent rights arising out of the work done in connection herewith. Buyer expressly agrees that it will not assert any property rights herein, except the right for itself and subsequent owners to use the product.
2. Buyer acknowledges that any software materials constitute valuable trade secrets of Seller and are unpublished works on which Seller holds the sole and exclusive copyright. Buyer agrees to maintain and protect the confidentiality of these trade secrets and agrees not to disclose them or use them for any purpose not contemplated by this Agreement. Buyer agrees to formulate and adopt appropriate safeguards in light of its own operating activities, to insure protection of the confidentiality of these trade secrets. Buyer shall immediately notify Seller of any information which comes to its attention which indicates that there has been any loss of confidentiality of Seller trade secret information.

SUBMISSION AND ACCEPTANCE OF ORDERS

1. All orders and contracts are subject to acceptance or rejection by an officer of Seller or any individual authorized by Seller in writing , at the main offices of Seller, which approval or rejection shall in all cases be in writing to the Buyer, and no order or contract shall be binding until so accepted. Seller reserves the right to refuse any business originating in the Territory of the Buyer, for any reason which in the considered judgment of Seller is sufficient grounds for refusal.
2. On orders and contracts of a deferred-payment nature, all such payment and credit extensions are subject to final review and approval by Seller. Seller may accept such orders or contracts, withhold shipment after initial acceptance if for any reason the Buyer's credit has become impaired.

SHIPMENTS AND SHIPPING INFORMATION

1. All shipments, from whatever source, shall be contingent upon prior approval of the order or contract by Seller, and after such prior approval, upon the effect of strikes, accidents, embargoes, priorities, or any cause natural or otherwise, beyond the control of this Seller. Seller, in effect, assumes no liability hereunder for its failure to make shipment on any order or contract.
2. All Products are prepared by Seller for North American land shipment only under this Agreement. Any special preparations, for water shipment or foreign trade outside of the North Americas, must be arranged for as a special consideration.

Locations and Contact Information

Americas

NIDEC DRIVE TECHNOLOGY AMERICA CORPORATION
175 Wall Street, Glendale Heights, IL 60139 USA
Sales, Customer Service, Engineering & Product Support
P: (800) 842-1479 | P: (630) 924-7138 | F: (630) 924-7382
info@nidec-dtc.com | www.nidec-dtc.com

NIDEC DRIVE TECHNOLOGY DE MEXICO
Parque Industrial NAVEX PARK
Callejón de la Evangelización
#106, Cal. Santa Maria
Magdalena, Querétaro, Oro.
76137. México

NIDEC DRIVE TECHNOLOGY DO BRASIL LTDA.
Av. Paulista, 2073 - Ed. Horsa II,
17º andar, Conj. 1702
São Paulo - SP, Brasil CEP
01311-000

Europe

NIDEC GRAESSNER GMBH CO. & KG
Kuchenaecker 11
72135 Dettenhausen
Germany

Asia-Pacific

NIDEC DRIVE TECHNOLOGY CORPORATION
Corporate Headquarters
1 Terada, Kohtari
Nagaokakyo-City
Kyoto Japan 617-0833

NIDEC DRIVE TECHNOLOGY ZHEJIANG CORPORATION
1858 Ping Cheng Street
Pinghu Economic Development Zone
Zhejiang, China, 314200

NIDEC DRIVE TECHNOLOGY CORPORATION
Corporate Headquarters
338 Tonoshiro-cho
Kuze Minami-ku
Kyoto 601-8205, Japan

NIDEC DRIVE TECHNOLOGY CORPORATION SHANGHAI
Trading Company Ltd.
Shanghai, China

NIDEC DRIVE TECHNOLOGY KOREA CORPORATION
Seoul, Korea

NIDEC DRIVE TECHNOLOGY TAIWAN CORPORATION
Taichung City, China

NIDEC DRIVE TECHNOLOGY HONG KONG COMPANY, LTD.
Hong Kong, China

NIDEC DRIVE TECHNOLOGY SINGAPORE CORPORATION
Singapore

NIDEC DRIVE TECHNOLOGY INDIA MANUFACTURING PRIVATE LIMITED
Bangalore, India

Contact us for sales and stocking locations throughout Europe and the Middle East.


FLEXWAVE
Despite its compact body, possibility is endless
NIDEC-SHIMPO Global Connections
Americas
Europe
Asia-Pacific


175
Nidec
175 Wall Street

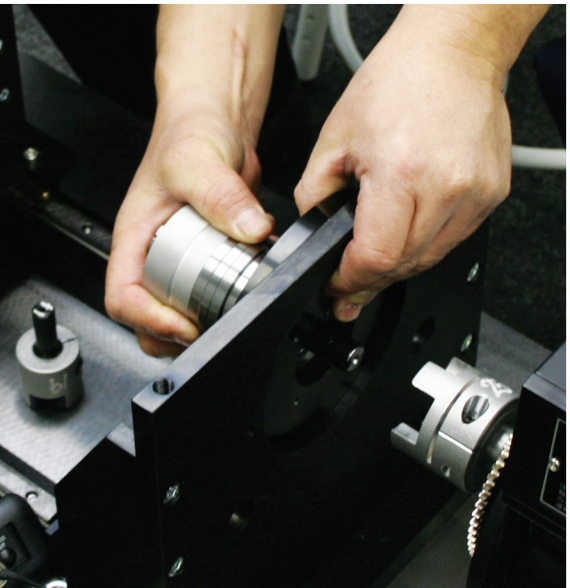


Nidec
175 Wall Street

www.nidec-dtc.com

NIDEC DRIVE TECHNOLOGY CORPORATION
175 Wall Street, Glendale Heights, IL 60139 USA
Phone: (800) 842-1479 • info@nidec-dtc.com